BRABUS SHADOW 1000

OWNER'S MANUAL

BRABUS SHADOW 1000 ST

MODEL YEAR 2026

BRABUS MARINE

Table of Contents

1 Introduction

1.1 Purpose of this manual

This owner's manual contains important information and instructions for using your boat.

In this owner's manual you can find important information that help you handle and maintain your boat. The manual contains detailed information about the boat and the systems installed, and general information about handling and taking care of the boat. The latest version of the manual is available in electronic format at the manufacturer's website.

Read the manual carefully and familiarize yourself with your boat before you start to use it. Also ensure that the anticipated wind and wave conditions correspond to the design category of your boat, and that you and your crew are able to handle the boat in these conditions.

This owner's manual is not a substitute for boating safety skills or good seamanship.

If this is your first boat or if this boat type is new to you, ensure you can handle the boat before you set out for the first time.

For information about local sea schools and approved instructors, please ask your boat dealer, the local boat clubs and national motorboat or yacht federations for advice. They can also provide information on specific local regulations on issues such as a driving licence or authorization, registration, insurance, and safety equipment.

This owner’s manual is not a detailed maintenance or troubleshooting guide. If problems occur, contact the boat manufacturer or its local representative. When you are in need of maintenance or repair and alteration work, always turn to competent and trained professionals. Changes that can affect the boat’s security features must be assessed, carried out and documented by competent professionals. The boat manufacturer cannot be held responsible for unauthorized modifications. Every change to the boat’s center of gravity (from highly mounted heavy equipment or a new engine type etc.) significantly affects the stability, trim and performance of the boat.

Keep this manual in a safe place and pass it on to the new owner if you sell your boat. If the manual is mislaid or destroyed, a copy can be ordered from your dealer or downloaded from the manufacturer's website.

See the purchase agreement or order for the scope of your purchase. In case something does not work satisfactorily with your boat or its equipment, you can check the service documents for possible service and repair measures. If uncertain, always contact your dealer.

1.2 Safety symbols

This owner's manual contains danger, warning, caution and notice statements informing the user or authorized service representatives of any potential harm to the product or person.

Hazard is defined as a source of potential injury to a person.

All abnormal use is forbidden, including disregarding information on safety.

⚠ DANGER	**Danger** indicates an imminently hazardous situation which, if not avoided, **will result in death or serious injury**.
⚠ WARNING	**Warning** indicates a potentially hazardous situation which, if not avoided, **could result in death or serious injury**.
⚠ CAUTION	**Caution** indicates a potentially hazardous situation which, if not avoided, **might result in minor or moderate injury**.
NOTICE	**Notice** indicates a potential situation which, if not avoided, **might result in property damage or in an undesirable result or state**.
ℹ	The information icon calls attention to information that clarifies or simplifies a procedure.

1.3 Document conventions

Units

This manual uses SI units in accordance with ISO 1000. In some cases, other units may have been used alongside.

An exception is the wind velocity, which in the Recreational Boat Directive is given in the Beaufort Scale.

Terminology

In this manual, the right side of the hull is referred to as starboard (STB) and the left side as port.

1.4 Copyright

1.5 Disclaimer

The material in this manual is for information purposes only.

Axopar Boats / BRABUS Marine reserves the right to change the products without prior notice to improve reliability, function, design or other characteristics of the products. Axopar Boats / BRABUS Marine assumes no liability for any damages, losses, costs or expenses arising out of or relating to the use of this manual or the products described herein.

Axopar Boats / BRABUS Marine makes no representations and warranties with respect to this manual, either express or implied, including, but not limited to, the implied warranties of merchantability and fitness for a particular purpose.

1.6 Warranty

The Limited Warranty for the boat and the relevant contact information are enclosed as a separate document.

For any warranty claims, please contact your BRABUS Marine dealer mentioned on the cover page.

2 Safety

⚠ WARNING

The boat owner is responsible for making sure that the safety equipment on the boat meets the rules and regulations of the local authorities.

- Keep the necessary safety equipment up to date and on the boat at all times.

Check the preferred location of the major safety equipment in the section ***Safety diagram***.

⚠ WARNING

Overloading the boat can damage the engine, even when shut off.

- When loading the boat, never exceed the maximum recommended load of the boat shown in the builder's plate.
- Always load the boat carefully and distribute loads appropriately to maintain design trim.
- Avoid placing heavy equipment or material high up in the boat.

The liquids in the built-in tanks are not included in the maximum load shown on the builder's plate.

⚠ WARNING

When out on the water, always use the seats intended for the passengers.

Do not exceed the maximum number of persons allowed in the boat, shown in the builder's plate.

The total weight of the persons on board and their personal luggage must never exceed the maximum load of the boat shown in the builder's plate.

⚠ CAUTION

Risk of personal injury and risk of damage to the roof or roof structures.

Do not place or attach any load or equipment on the roof or to the roof structures if there is no specific roof rack.

It is forbidden to enter the roof or dangle from the roof structures.

2.1 Safe and responsible boat operation

Please familiarize yourself to these safety aspects before using the boat.

The person controlling the boat is in charge of the safety of all the passengers as well as other seafarers.

⚠ CAUTION

The owner is responsible for ensuring that the normal mode of operation is maintained. This means that the speed of the craft needs to be matched to the prevailing sea state, the craft being used "with good seamanship behaviour."

Neglecting these safety rules might lead to serious injury or death.

- Anyone who controls the boat must be competent to operate a boat of this type and size.
- The boat must not be controlled by an unqualified operator or by an operator under the influence of alcohol, drugs or other substance which impair judgement.
- The boat must always be operated at speeds that will not put people or property in danger.
- The captain must constantly be aware of conditions surrounding the boat when underway and especially before sharp turns.
- In challenging conditions such as rough water and winds, impaired visibility, and congested waterways; reduce speed, use appropriate navigation equipment and lights, and use a lookout to identify possible hazards.
- Pay attention to your wake. It can endanger smaller boats or damage moored boats or other property. You are responsible for damage caused by your wake.
- Only allow passengers to ride in areas that do not pose a hazard to themselves or the boat.
- Do not allow passengers to ride on aft folding seats, aft fender boxes or gunwales.
- Passengers must remain seated while the boat is moving.
- Use of alcohol, drugs, or other judgment-impairing substances poses a serious threat to yourself and others. The boat operator is responsible for the behaviour of people on board.
- For every passenger on board, the boat must carry one wearable personal flotation device (PFD).

⚠ WARNING

Speed hazard

This is a high-performance vessel; the speed of the craft needs to be adapted to the environment. To ensure your passengers' safety and comfort, avoid sharp turns in speeds exceeding 40 knots. Never operate your boat at speeds which exceed your ability to react to surprising and unpredictable situations. The captain is always responsible for operating the vessel in a safe way.

⚠ WARNING

Never operate a boat at a speed at which you do not feel comfortable.

⚠ DANGER

Slipping hazard

Deck might be slippery when wet, even on non-skid areas. Be extremely cautious on slippery surfaces and wear suitable footwear.

⚠ DANGER

Do not go out boating in severe weather conditions as this might lead to serious injuries or death. Always get back to shore before the weather turns bad.

2.2 Safety diagram

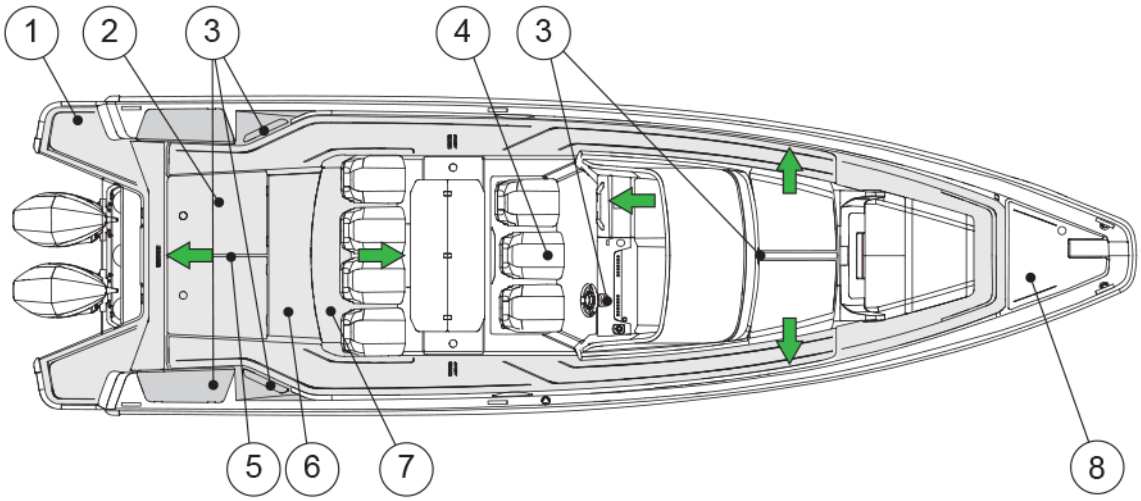

(1) Swim ladder
(2) Life raft storage
(3) Fire extinguisher
(4) Fire blanket
(5) Fire extinguisher (in optional aft cabin)
(6) Main switch
(7) Shut-off valve for LPG system
(8) Gas cylinder and LPG main shut-off valve
→ Exit

2.3 Fire protection and control

The most common fire sources are the engine and the stove. If there is a fire in the boat, it may result in an explosion.

⚠ WARNING

Fire usually spreads very fast — be quick to extinguish the fire with the fire extinguisher on the boat!

See the section ***Safety diagram*** for the exact location of the fire extinguisher(s).

If the fire starts to get out of control, leave the burning boat to save lives.

⚠ WARNING

Always put down the fire by depriving the fire of oxygen.

Do not use water!

Using water in fire involving flammable liquids can spread the liquid and make the fire worse.

⚠ WARNING If the fire reaches the fuel tank, an explosion may occur and cause a large area around the boat to burn.

- Keep the bilge clean and check it regularly for fuel and gas fumes or fuel and oil leaks.
- Do not hang curtains or other flammable material near or above the LPG cooker or other equipment with naked flames.
- Never leave the boat unattended when the cooker or heater is switched on.
- Never refuel or replace gas containers when the engines are running.
- Never smoke when handling fuel or gas.
- Never block evacuation routes or emergency exits.
- Never block access to safety equipment such as fuel valves or main power switches.
- Never block access to fire extinguishers, visible or concealed.
- Never modify the boat's systems (especially electrical, fuel or gas systems).

2.3.1 Fire control equipment

Check the exact locations of the fire control equipment in the section ***Safety diagram***.

Fire extinguishers

You must fit the boat with hand-held fire extinguishers. The fire ratings of the fire extinguishers must be at least as follows:

- Near driver: 8A68B (2 kg)
- Aft, fender cabinets and inside fenderbox: 221B (3 x 13A/89B)
- Front Cabin: 8A68B (2 kg)
- Optional aft cabin: 8A68B (2 kg)

US minimum requirements for fire extinguishers: type 5-B, ABC (2 lb) in the following locations

- Near driver
- Fenderbox
- Front Cabin

Optional aft cabin: 8A68B (2 kg)

Check the exact locations of the fire extinguishers in the section ***Safety diagram***.

The fire extinguishers are not included in the manufacturer's delivery. Before using the boat, it must be furnished with fire extinguishers.

Fire blanket

A fire blanket is ideal for putting out small fires and also one of the best options if a person's clothes catch fire.

- Keep a fire blanket onboard in an easily accessible place.
- Keep a fire blanket beside the LPG cooker.

2.3.2 Boat owners' and users' responsibilities

It is your responsibility as the boat owner and user to ensure that the fire control equipment is accessible at all times.

- Check the fire extinguishing equipment regularly at the intervals specified for the equipment.
- Replace equipment with expired date immediately with equivalent or better equipment.
- Advice the crew and guests of the location and instructions for use of the fire control equipment, and the location of evacuation routes and emergency exits.

2.3.3 Checklist: Fire in the engine

- Stop the engine.
- Steer the boat up against the wind, if possible.
- Make sure all passengers have life jackets.
- If necessary:
  - Evacuate the passengers.
  - Call for sea rescue.
- Shut off fuel, LPG and main power switches.
- Extinguish the fire.
- Wait until fully certain that the fire has been extinguished before opening the engine cover.

  Carefully open the engine cover and be prepared to use the handheld fire extinguisher if necessary for post-fire extinguishing.
- Put out possible smoldering fires with water.

2.3.4 Checklist: After fire

- Open doors and windows for better ventilation.
- Inspect the boat and its equipment, and repair any damages.
- Contact local authorities, if needed.
- Make sure that the fire extinguishing equipment is refilled or replaced after use.

2.4 Carbon monoxide

⚠ WARNING

Carbon monoxide (CO) is colorless, odorless, tasteless, and extremely dangerous gas.

All engines, generators, and fuel burning appliances produce CO as exhaust.

Prolonged exposure to low concentrations or very quick exposure to high concentrations may cause brain damage or death.

Open all doors, curtains, windows, and hatches to let fresh air circulate when running an engine or generator or burning any fuel while the boat is anchored, moored or docked.

If you can smell engine or generator exhaust, you are inhaling CO. CO can also be present without the smell of exhaust fumes.

⚠ WARNING

If the CO alarm is activated, make sure all persons onboard exit the closed spaces.

- If exhaust fumes are detected or if CO accumulation is suspected on the boat, take immediate action to ventilate these fumes.
- Turn off all engines and generators.
- Open all hatches, windows and ports to ventilate.

Changing course and speed to place the boat heading into the wind can improve ventilation.

Symptoms of carbon monoxide poisoning are dizziness, ears ringing, headache, nausea and unconsciousness. A poisoning victim's skin often turns cherry red.

Because the carbon monoxide gas is odorless, colorless and tasteless, it is unlikely to be noticed until a person is affected.

⚠ DANGER

- If CO poisoning is suspected, have the victim breath fresh air deeply.
- If breathing stops, resuscitate.
- A victim often revives, but then relapses because organs are damaged by the lack of oxygen.

  Seek immediate medical attention.

High levels of carbon monoxide may accumulate in the following ways:

- Blocking hull exhausts while operating at slow speed or if exhausts are submerged.
- Using canvas curtains.
- Winds blowing exhaust toward boat occupants.
- Operating engine or generator in a confined space.
- Operating with the bow high.

Dangerous concentrations of carbon monoxide are present if:

- the engine or generator exhaust systems leak
- insufficient fresh air is circulating where people are present
- fumes move from the rear of the boat into the cockpit and cabin area.

To minimize the danger of CO accumulation when the engine and generator are running or when using burning fuel applications:

- Be sure to have sufficient ventilation when using canvas or window-type side curtains when underway, anchored, moored or docked.
- Operate all burning fuel appliances, such as charcoal, propane, LPG, CNG or alcohol cooking devices, in areas where fresh air can circulate. Do not use such devices where there is no noticeable air movement, especially in the cabin, when anchored, moored or docked.
- Do not idle the engine without moving the boat for more than 15 minutes at a time.
- Inspect the exhaust system regularly. See the manufacturer's manual for instructions.

2.5 Carbon monoxide monitor

There is a carbon monoxide monitor system in the boat.

The carbon monoxide monitors are located in all accommodation areas of the boat.

- With regular intervals, check that the monitor system is functioning. For instructions, see the equipment manufacturer's manual.
- It is not possible to turn the CO monitor off when the boat is in use.

See here the description of the audible and visual signals of the monitor.

Low battery voltage can trigger the carbon monoxide monitor to sound an alarm.

Operation	Audible Signal	Visual Signal
Normal	None	Green led flashes every minute
CO alarm	4 beeps, 5 seconds off - cycle repeats	Flashing red
Alarm malfunction	Beep every 30 seconds	Alternating red/green flash
End of life signal	Beep every 25-30 second	Red red green green flash sequence

2.6 Smoke alarm

Boat is equipped with smoke alarms.

Smoke alarm is battery powered. When the battery level reaches low level, the smoke alarm will start emitting low battery warning signal.

Smoke alarm may give false alarm if there is steam, condensation, or normal smoke or fumes in its vicinity.

The smoke alarm has a built-in hush or silence feature incorporated into the test button. This feature can be useful when unwanted alarm is caused by cooking or other non-hazardous sources trigger the alarm. Hush or silence feature temporarily silences the alarm and can be activated by pressing the test button for approximately 1 second. When hush or silence feature is activated, the alarm will enter dormant mode for 10-minute period with reduced sensitivity. Reduced sensitivity is indicated by red LED flashing every 10 seconds. After the period is over, the device will signal returning to normal sensitivity with two short beeps. If smoke density increases during hush or silence period, the device will automatically return to alarm mode.

Smoke alarms should be replaced at minimum every 5 years.

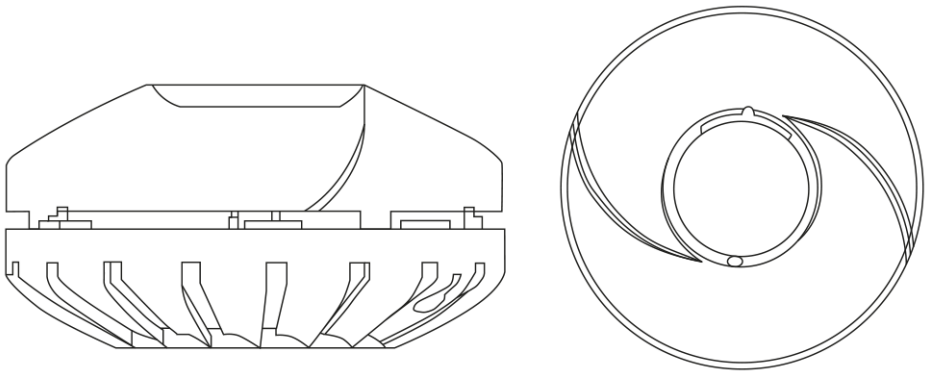

Figure 2.1 Smoke alarm

2.7 Life raft

The boat is not equipped with a life raft by the manufacturer.

Storing a life raft

If you decide to acquire a life raft for your boat, stow it to the aft of the boat, so that it is easily accessible in case of emergency.

Using the life raft

The life raft must be tied to the stern of the boat and prepared for use.

In an emergency, it is easiest and safest to board the life raft from the swimming deck. Switch off the engine before using the life raft.

Follow the life raft manufacturer’s instructions.

2.8 Safety labels on board

The following picture and table present the location and description of the safety labels on board. Location of the labels may vary depending on the chosen options.

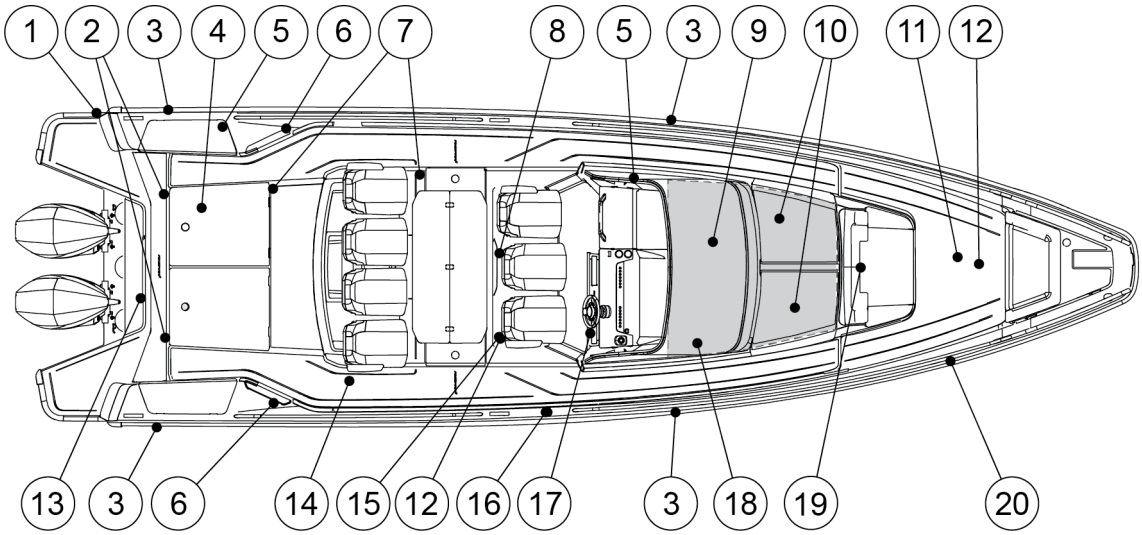

Position	Label	Description
1		**Warning** Rotating propeller may cause serious injury or death. Do not approach or use ladder when engine is running.
1	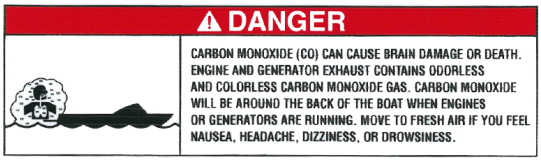	**Danger** Carbon monoxide (CO) can cause brain damage or death. Engine and generator exhaust contains odorless and colorless carbon monoxide gas. Carbon monoxide will be around the back of the boat when engines or generators are running. Move to fresh air if you feel nausea, headache, dizziness, or drowsiness.
2	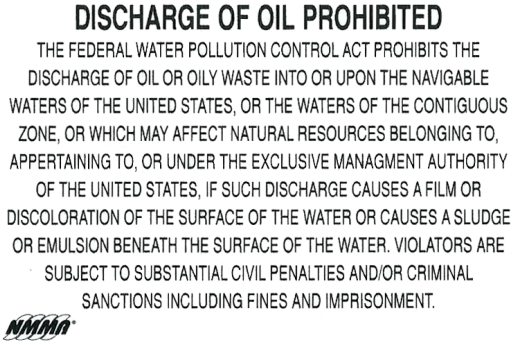	**Discharge of oil prohibited** The federal water pollution control act prohibits the discharge of oil or oily waste into or upon the navigable waters of the United States, or the waters of the contiguous zone, or which may affect natural resources belonging to, appertaining to, or under the exclusive management authority of the Unites States, if such discharge causes a film or discoloration of the surfaces of the water or causes a sludge or emulsion beneath the surface of the water. Violators are subject to substantial civil penalties and/or criminal sanctions including fines and imprisonment.

Position	Label	Description
2	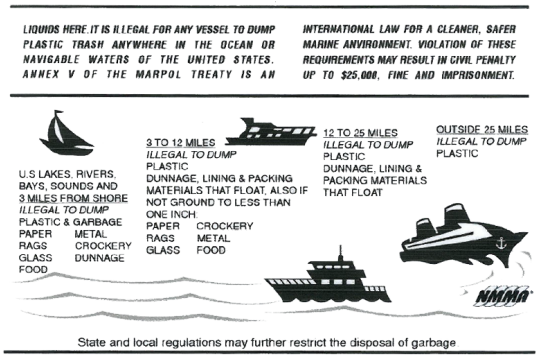	Liquids here. It is illegal for any vessel to dump plastic trash anywhere in the ocean or navigable waters of the United States. Annex V of the Marpol Treaty is an international law for a cleaner, safer marine environment. Violation of these requirements may result in civil penalty up to $25,000, fine and imprisonment. U.S. lakes, rivers, bays, sounds and 3 miles from shore Illegal to dump plastic & garbage, paper, metal, rags, crockery, glass, dunnage, food. 3 to 12 miles Illegal to dump plastic, dunnage, lining & packing materials that float. Also if not ground to less than one inch: paper, crockery, rags, metal, glass, food 12 to 25 miles Illegal to dump plastic, dunnage, lining & packing materials that float Outside 25 miles Illegal to dump plastic State and local regulations may further restrict the disposal of garbage.
3	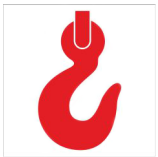	Fastening point
4		**Warning** Installation of maintenance free AGM batteries are only allowed in this area.
5		Sink drain shutoff valve
6		Fire extinguisher
7		**Warning** No ventilation is provided. Fuel vapors are a fire and explosion hazard. To avoid injury and death, do not store fuel or flammable liquids here.

Position	Label	Description
8		**Warning** Avoid serious injury or death. Unexpected seat rotation may cause ejection of occupant. Lock swivel when speed exceeds 5 mph.
9		Waste tank shutoff valve
10		**Warning** Door must be secured while vessel is underway.
10		Emergency exit
11		**Danger** Unplug shore power and turn off generator before removing cover.
12		Pay attention to the warnings and read the manual.
13	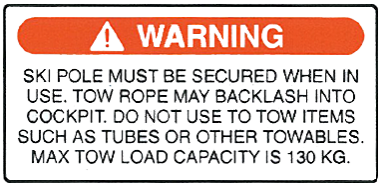	**Warning** Ski pole must be secured when in use. Tow rope may backlash into cockpit. Do not use to tow items such as tubes or other towables. Max tow load capacity is 130 kg.

Position	Label	Description
14		**Notice** LPG working pressure Butane: 28mbar Propane: 37mbar
14		LPG shutoff valve
14	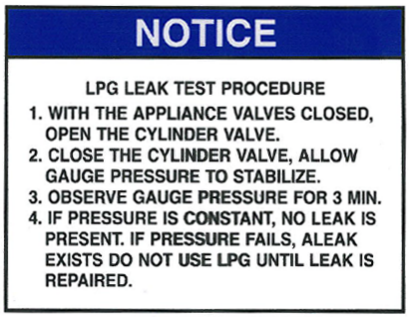	**Notice** LPG leak test procedure **1.**With the appliance valves closed, open the cylinder valve. **2.**Close the cylinder valve, allow gauge pressure to stabilize. **3.**Observe gauge pressure for 3 min. **4.**If pressure is constant, no leak is present. If pressure fails, a leak exists. Do not use LPG until leak is repaired.
14	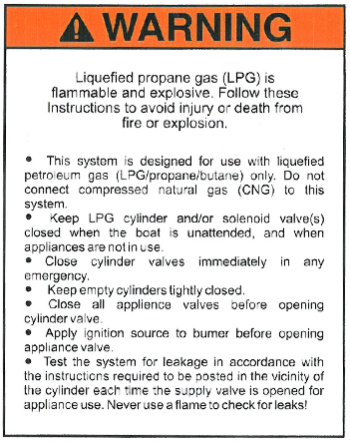	**Warning** Liquefied propane gas (LPG) is flammable and explosive. Follow these instructions to avoid injury or death from fire or explosion. • The system is designed for use with liquefied petroleum gas (LPG/propane/butane) only. Do not connect compressed natural gas (CNG) to this system. • Keep LPG cylinder and/or solenoid valve(s) closed when the boat is unattended, and when appliances are not in use. • Close cylinder valves immediately in any emergency. • Keep empty cylinders tightly closed. • Close all appliance valves before opening cylinder valve. • Apply ignition source to burner before opening appliance valve. • Test the system for leakage in accordance with the instructions required to be posted in the vicinity of the cylinder each time the supply valve is opened for appliance use. Never use a flame to check for leaks.
14		**Warning** Do not close the wetbar lid until the grill has completely cooled down.

Position	Label	Description
15		**Caution** If switch is turned off while engine is running alternator will be damaged.
16	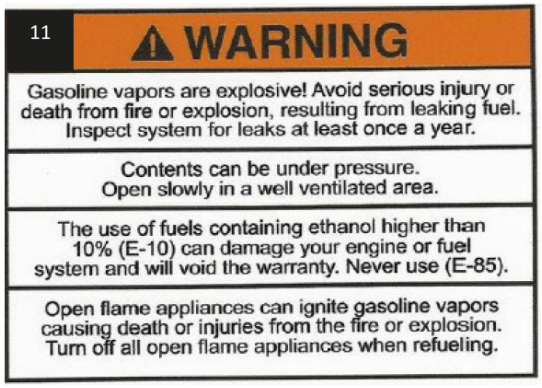	**Warning** Gasoline vapors are explosive! Avoid serious injury or death from fire or explosion, resulting from leaking fuel. Inspect system for leaks at least once a year. Contents can be under pressure. Open slowly in a well ventilated area. The use of fuels containing ethanol higher than 10% (E-10) can damage your engine or fuel system and will void the warranty. Never use (E-85). Open flame appliances can ignite gasoline vapors causing death or injuries from the fire or explosion. Turn off all open flame appliances when refueling.
17		NMMA certificate
17		**Certification plate US** Design compliance with NMMA requirements and US Coast Guard safety standards. Meets EVAP standards using certified components.
17		**Warning** Use caution with skier in tow as tow rope may backlash into cockpit when released.

Position	Label	Description
17	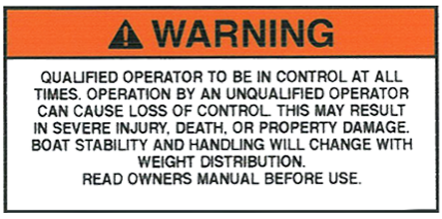	**Warning** Qualified operator to be in control at all times. Operation by an unqualified operator can cause loss of control. This may result in severe injury, death, or property damage. Boat stability and handling will change with weight distribution. Read owners manual before use.
17	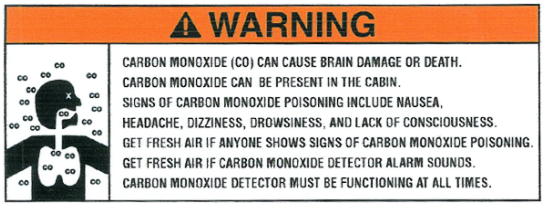	**Warning** Carbon monoxide (CO) can cause brain damage or death. Engine and generator exhaust contains odorless and colorless carbon monoxide gas. Signs of carbon monoxide poisoning include nausea, headache, dizziness, drowsiness, and lack of consciousness. Get fresh air if anyone shows signs of carbon monoxide poisoning. See owner's manual for information regarding carbon monoxide poisoning.
17		**Warning** Visibility from the seated position at this helm station is limited. Avoid serious injury or death from collisions. Operation from a standing position may be necessary to maintain lookout as required by rules of the road. Reas owners manual.
17	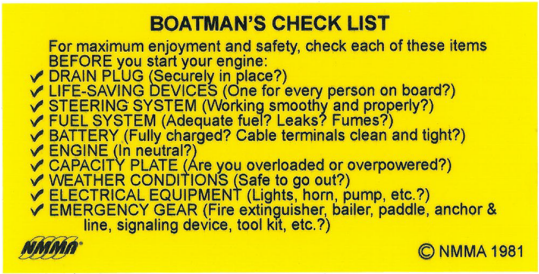	**Boatman's checklist** For maximum enjoyment and safety, check each of these items before you start your engine: - Drain plug (Securely in place?) - Life-saving devices (One for every person on board?) - Steering system (Working smoothy and properly?) - Fuel system (Adequate fuel? Leaks? Fumes?) - Battery (Fully charged? Cable terminals clean and tight?) - Engine (In neutral?) - Capacity plate (Are you overloaded or overpowered?) - Electrical equipment (Lights, horn, pump, etc?) - Emergency gear (Fire extinguisher, bailer, paddle, anchor & line, signaling device, tool kit, etc.?)
17		**Warning** Rotating propeller may cause serious injury or death. Shut off engine when near persons in water.

Position	Label	Description
17	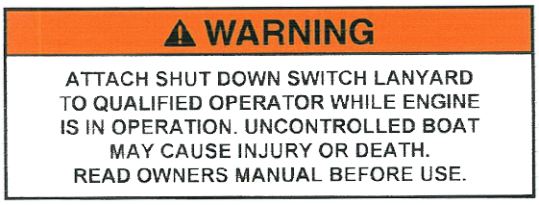	**Warning** Attach shut down switch lanyard to qualified operator while engine is in operation. Uncontrolled boat may cause injury or death. Read owners manual before use.
18	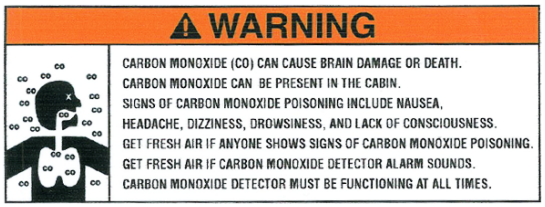	**Warning** Carbon monoxide (CO) can cause brain damage or death. Carbon monoxide can be present in the cabin. Signs of carbon monoxide poisoning include nausea, headache, dizziness, drowsiness, and lack of consciousness. Get fresh air if anyone shows signs of carbon monoxide poisoning. Get fresh air if carbon monoxide detector alarm sounds. Carbon monoxide detector must be functioning at all times.
19		**Danger** Leaving window open could induce exhaust fumes into cabin resulting in severe personal injury or death.
19		**Warning** Watertight closure. Keep shut when underway.
20		**Warning** Avoid personal injury. Stay inside deck rails (and gates) when boat is underway.

3 Product overview

3.1 Purpose of use

The boat is a recreational boat, thus not suitable for professional use.

3.2 Identification

Each boat has a unique identification code, containing 14 characters and a hyphen.

The height of the code text is 6 mm, and it is located on the starboard side of the stern.

Example: **FI – AXOSE100F424**	**Data**
FI	Country of manufacturer: Finland
-	Hyphen
AXO	Manufacturer: Axopar Boats
SE	Boat model • SE = Shadow 1000 Sun-Top • SX = Shadow 1000 Cross Cabin
100	Boat number
F	Manufacturing month • A = January • B = February • C = March • etc.
4	Last digit of the manufacturing year
24	Model year

3.3 Builder's plate

The builder’s plate is always located close to the steering position of the boat.

Eurofins Expert Services Oy has inspected that the boat fulfills the Recreational Boat Directive and related standards' requirements.

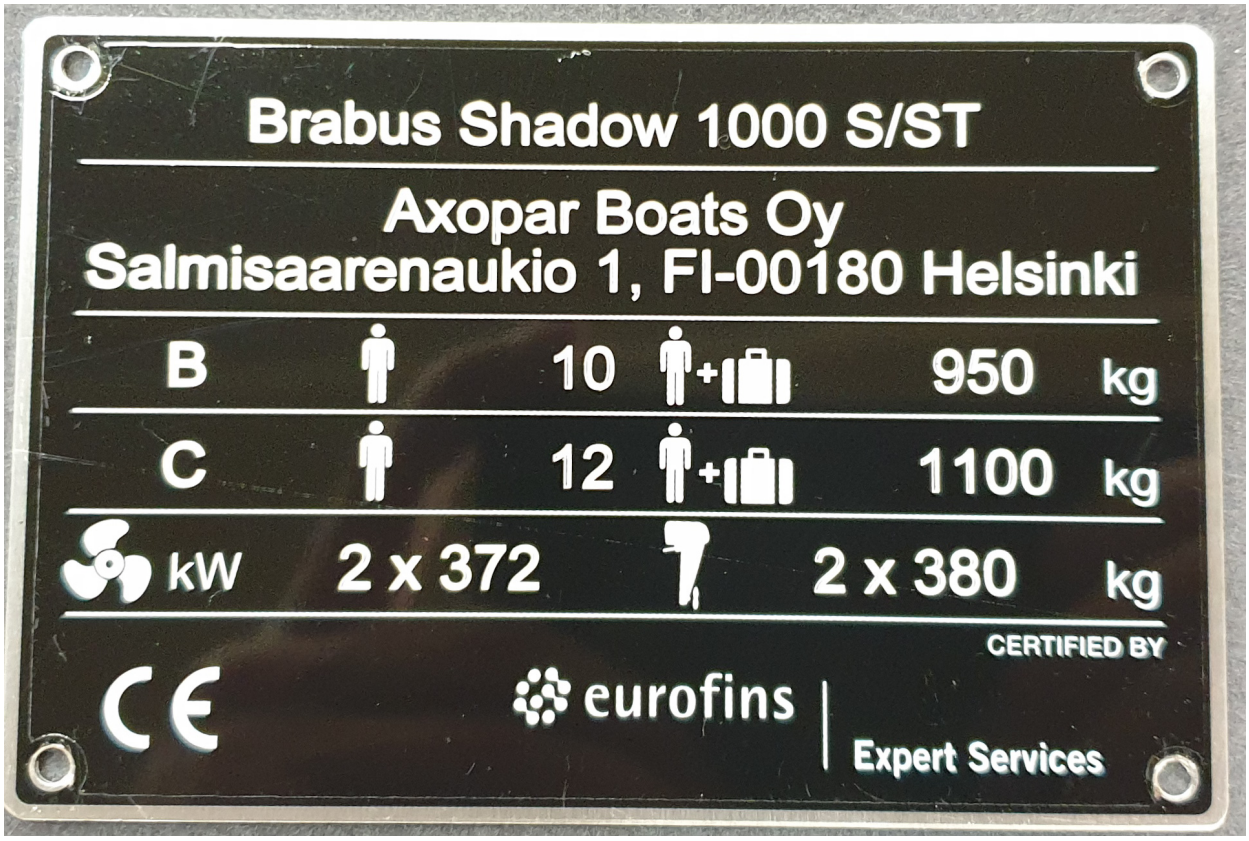

The builder's plate contains the following information:

- Boat model
- Manufacturer's address
- Maximum number of persons on board
- Maximum load: total weight of persons including personal luggage and basic equipment, and excluding tank contents

3.4 CE certification

This boat is classified to CE categories B and C.

The category is determined according to the maximum number of persons allowed onboard.

The CE certification indicates that a boat is designed and built in such a way that it retains its stability and buoyancy in given circumstances and meets other important requirements that are characteristic of the category in question. One of these requirements is that the boat must be easy to maneuver.

The CE categories classification also signifies that a boat is designed and constructed to withstand the following parameters in respect of stability, buoyancy, and other relevant essential requirements stated.

Category	Description
B. Offshore	The boat is designed for offshore voyages, where conditions up to and including wind force 8 on Beaufort Scale and significant wave heights up to and including 4 meters may be experienced.
C. Inshore	The boat is designed for voyages in coastal waters, large bays, estuaries, lakes and rivers, where conditions up to and including wind force 6 Beaufort Scale and significant wave heights up to and including 2 m may be experienced.

3.5 Dimensions and weight

Dimensions

Dimension	SI units	US units
Overall length (LMAX) (excluding engine)	11.6 m	38 ft 1 in
Hull beam (BH)	3.3 m	10 ft 10 in
Draught to propellers	0.85 m	2 ft 9 in
Height measured from waterline at light load	2.9 m	9 ft 6 in

Power

	SI units	US units
Engine power	2 x 372 kW	2 x 500 hp

Weight and loading

	SI units	US units
Hull weight (including engines)	4181 kg	9218 lb

	Category B	Category C
Maximum number of persons Default weights: • Adult: 75 kg (165 lb) • Child: 37.5 kg (83 lb)	10	12

	Category B		Category C	
	SI units	**US units**	**SI units**	**US units**
Total weight of all persons	750 kg	1653 lb	900 kg	1984 lb
Weight of unloaded boat with maximum weight outboard engines	5123 kg	11294 lb	5123 kg	11294 lb
Maximum recommended load	1710 kg	3770 lb	1860 kg	4101 lb
Boat weight at maximum load	6833 kg	15063 lb	6983 kg	15394 lb

of which

	SI units	US units
Maximum recommended engine weight	2 x 380 kg	2 x 838 lb
Personal luggage	100 kg	220 lb
Fresh water	100 kg	220 lb
Septic water	100 kg	220 lb
Fuel	556 kg	1226 lb
Life raft weight	45 kg	99 lb
Total weight of fuel, water and other liquids	760 kg	1675 lb
Mass on trailer	6065 kg	13371 lb

Tank capacity

	SI units	US units
Fuel tank	730 l	193 gal
Fresh water tank	100 l	26 gal
Septic tank	95 l	25 gal

The boat's stability assessment is based on maximum load conditions.

The maximum recommended load only contains the weight components mentioned above.

Gelcoat and paint

Hull	Premium Topcoat yacht paint (Platinum Grey/ White Grey/Glacier Blue)
Deck	Premium Topcoat yacht paint (Platinum Grey/ White Grey/Glacier Blue)
Switch panel module	Soft Touch / Carbon Fiber

Electrical system 12 V (Recommendation)

Start battery	2 pcs 75 Ah AGM battery
Service battery	2 pcs 75 Ah AGM battery
Bow thruster battery	1 pc 50 Ah AGM battery

Electrical system 230 V

Battery charger	65 Ah Shorepower connector

3.6 Boat layout

The boat has several deck options. The layout of the equipment and the technical components may vary depending on the selected accessories.

The standard boat has an open aft deck equipped with an aft-facing perch.

The front cabin of the boat can be equipped with gullwing doors.

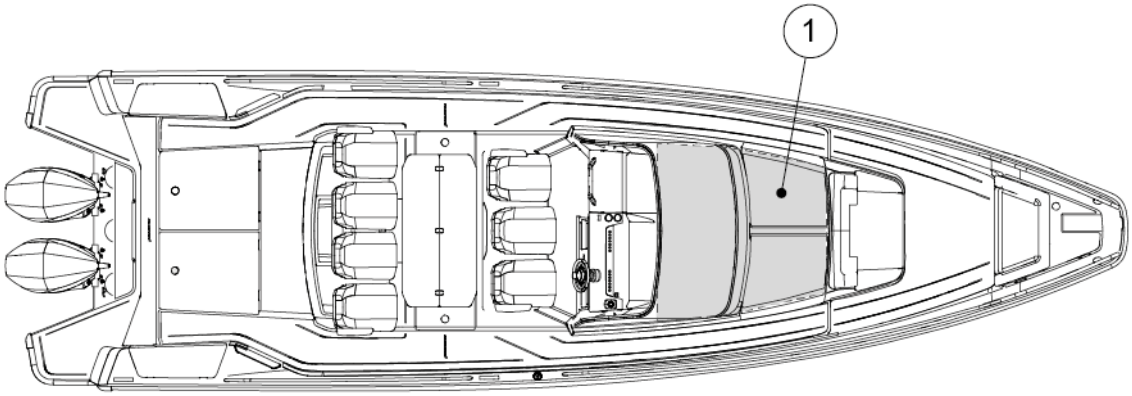

(1) Gullwing doors

The boat can be equipped with an aft cabin, aft bench with storage, a wet bar, a U-sofa or a multi-storage.

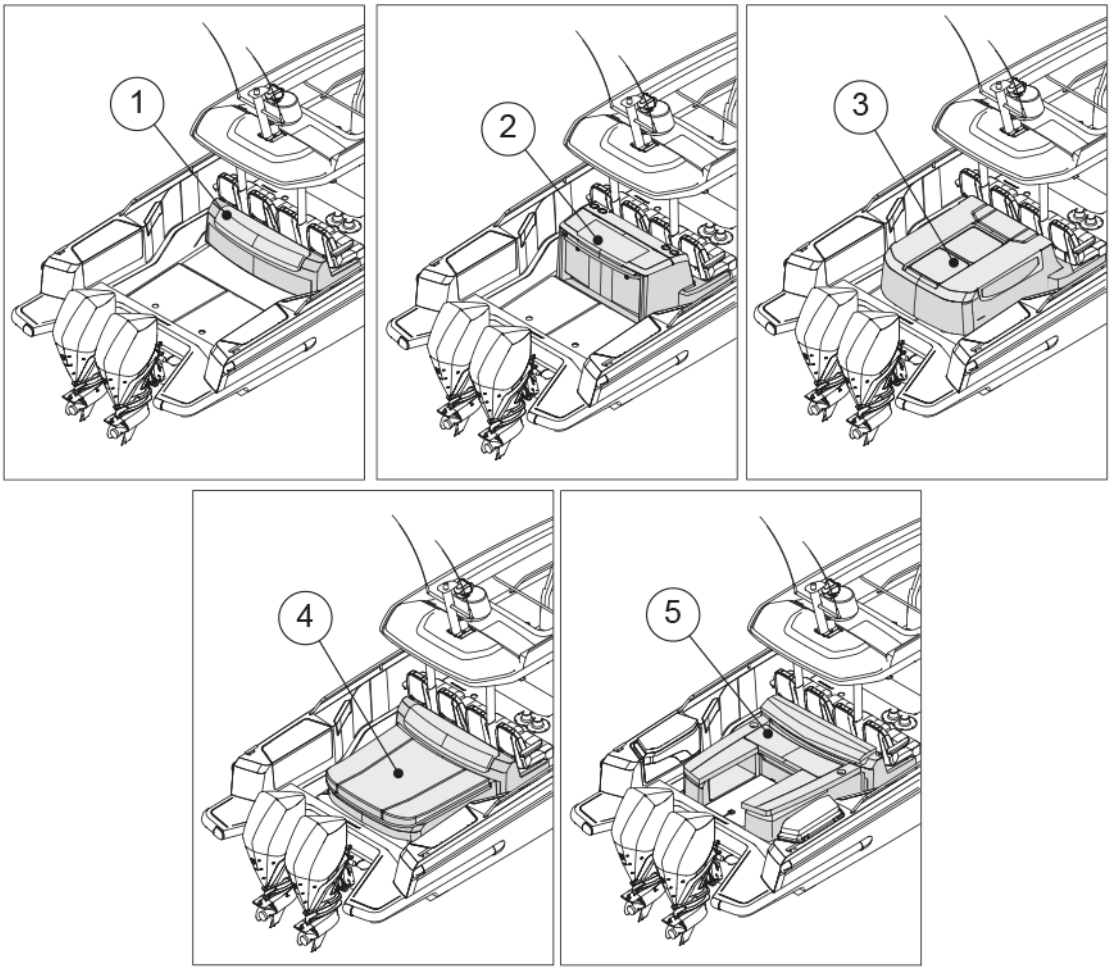

(1) Open aft deck with perch
(2) Wet bar
(3) Aft cabin
(4) Multi-storage
(5) U-sofa

4 Product description

4.1 Stability and buoyancy

Pay attention to the stability and buoyancy of the boat.

All weight dispositions (for example installing a fishing tower or radar, and engine replacement) can have a significant impact on the stability, trim, and performance of the boat.

- The bilge water level needs to be kept at a minimum.
- The stability of the boat is compromised if any weight is placed in a high position.

In stormy weather, all hatches, compartments and doors must be kept closed to minimize the risk of flooding.

Breaking waves represent a significant danger to stability.

⚠ WARNING To avoid the risk of flooding, always keep the seacocks closed when not in use (for example, the seacock for the toilet's flushing water).

4.1.1 Self-draining systems

The boat is equipped with self-draining systems for the whole deck area. The system is drained through drain holes in the aft of the boat. In addition to rainwater, the drain holes are intended to drain water ending up on the deck through splashing or from breaking waves.

There are drain holes for water in both aft corners of the deck. The openings are directly connected to the sea. The deck of the boat has been designed to allow the water to drain straight into the sea via the water gullies.

⚠ CAUTION Do not block the drain holes when using the boat.

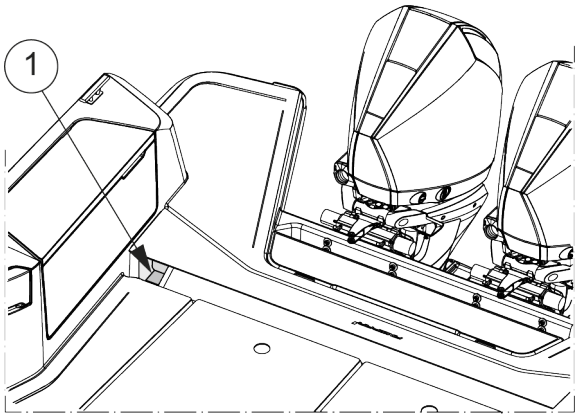

(1) Drain hole

The drain holes must be open at all times. Clean the holes regularly by removing any accumulated debris to prevent clogging.

The system is built so as to drain the water from the deck in normal use.

Do not close the taps when using the boat or when the boat is attached to the dock.

There is a recess under the front seats which is separately drained. There are two drains on aft corners of the recess. Recess drains via seacocks which are located on hull sides of the boat. Access to valves for the seacocks are from inspection hatch next to drains.

NOTICE

The self-emptying open space is meant for the removal of such water that ends up on the deck through rain, splashing or from breaking waves. A part of the rain water as well as water condensation in the bilge may end up in the bilge.

- Do not leave the boat unattended in the water for a long time.
- Observe the floating position of the boat and empty the bilge when necessary.

Leaving the boat unattended in the water for a long time may cause damage.

4.1.2 Openings in the hull and deck

There are several inlets through the boat that include valves for opening and closing such inlets. It is recommended to keep these inlets closed if the boat is out of use for a long time, and to open them again when the boat is used again. If the boat is lifted out from water or in rainy conditions, inlets should be kept open.

Always check that all hatches are securely closed before and after using the boat.

We recommend that you keep the windows, doors, deck hatches, roof hatches, vents and interior doors closed while driving. In stormy weather, always keep them securely closed to minimize the risk of water getting into the boat and to avoid any personal injuries.

In certain conditions and speeds, it is possible that water is sprayed inside through canopies, hatches or other openings, due to negative pressure or other effects. Risk for this can be minimized by closing the canopies, hatches or other openings.

To prevent water intrusion, please make sure the radar mast is protected if it is left in folded position during storage.

⚠ WARNING

All doors and hatches must be kept shut when under way.

The figure shows the hatches and seacocks that must be kept closed when the boat is left unmanned. Keep hatches closed also while underway.

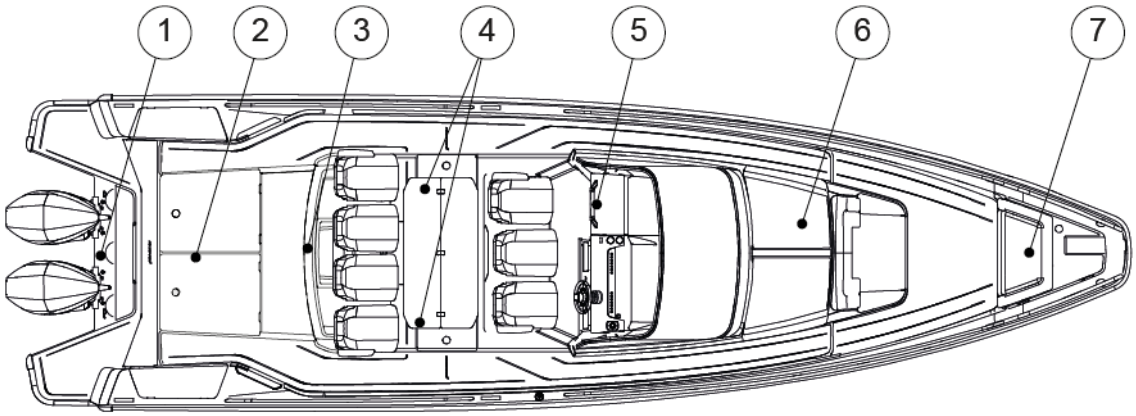

(1) Inspection hatch of the engine bracket
(2) Aft cabin roof hatches or storage box hatches
(3) Aft cabin door
(4) Cockpit floor hatches
(5) Front cabin door
(6) Gullwing doors of front cabin
(7) Bow storage box hatch

The location and number of these components depend on the level of the equipment on the boat.

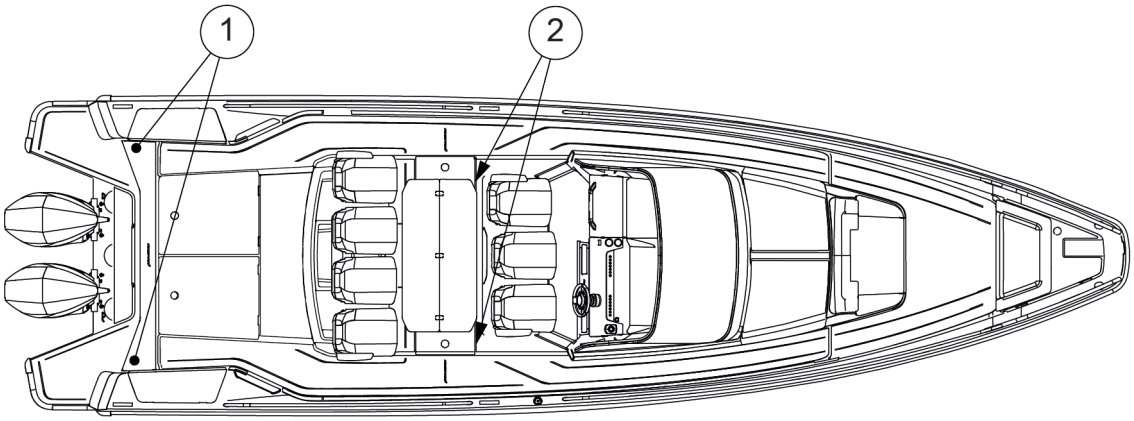

(1) Outlet of aft deck and cockpit draining seacocks
(2) Outlet seacocks of cockpits

The figure shows locations of through hull fittings installed to the boat.

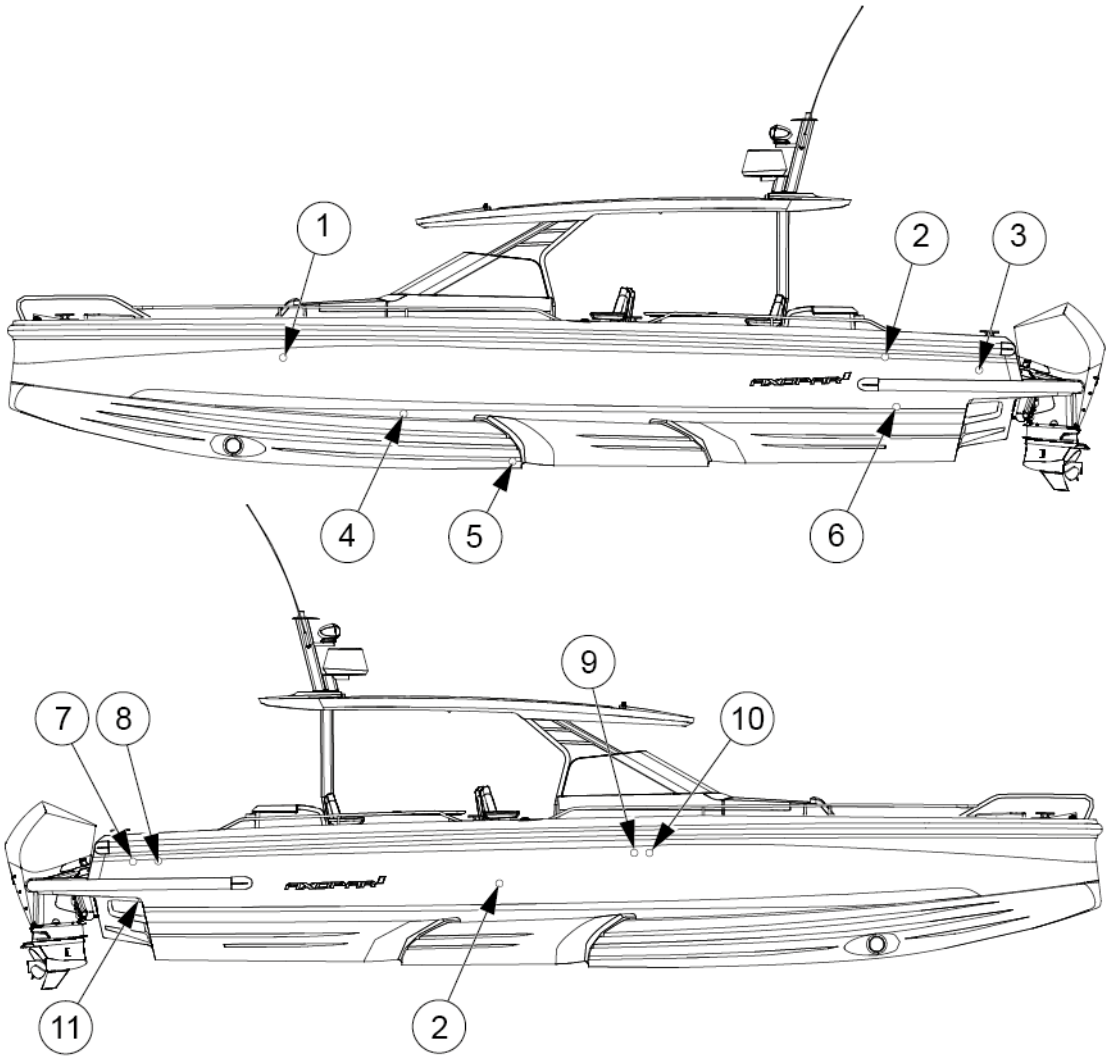

(1) Fresh water tank ventilation
(2) Fuel tank ventilation
(3) Manual bilge pump outlet
(4) Front cabin sink outlet
(5) Toilet seat water inlet
(6) Wet bar sink outlet
(7) Aft bilge pump outlet
(8) Heater fuel tank ventilation
(9) Septic tank ventilation
(10) Bow bilge pump outlet
(11) Aft deck and cockpit draining seacocks

4.1.3 Bilge system

The bilge system is designed to enable keeping the bilge water level at a minimum. The system consists of several pumps that cover all the lower sections of the boat.

The boat is equipped with both manual and electric bilge pumps.

The manual bilge pump is controlled with its handle.

The submersible electric bilge pumps are equipped with a float which triggers them automatically if there is water in the bilge space. The electric bilge pumps can also be controlled manually from the switches on the steering console.

⚠ WARNING

The bilge system is not designed for damage control.

The combined capacity of the bilge system is not designed to pump out the boat in the event of hull damage.

NOTICE

Keep the bilge area clean by washing it ever so often using bilge cleaner or biodegradable soap and water. Clean bilge significantly helps noticing signs of leaks or other problems that may occur.

NOTICE

- Check the functionality of the bilge pumps regularly by manually activating them.
- Remove any waste from the intakes.
- Clear the pump outlets from debris.

NOTICE

Do not run the pumps dry for a long time. The pumps will be damaged.

NOTICE

Avoid pollution.

Since the bilge system comprises of several automatic and manual pumps that cover all areas of the boat, the risk of accidental discharge of contaminated water by automatic pumps needs to be minimized.

Mitigate the risk by checking the bilge water regularly for contaminants such as oil, diesel, and glycol.

Before every use

Make sure that:

- The bilge pumps can operate freely, and there are no objects blocking operation.
- Water can flow through the strainer, and there is no muck or material restricting the water flow.

  Clean the strainer by pushing the lock tabs in the pump motor and lifting the motor unit off.

4.1.3.1 Bilge pumps and outlets

Bilge pump output

The manual bilge pump output is 33 liters (9 gallons) per minute.

The automatic bilge pump output is 41 liters (11 gallons) per minute.

When replacing bilge pump, ensure minimum capacity requirement is fulfilled.

Bilge pump locations

The manual bilge pump's control handle is located in the port side stowage casing of the aft deck.

The electric bilge pumps are submersible. One electric bilge pump is located under the berth of the aft cabin or under the storage hatch. Another electric bilge pump is located under the front cabin floor.

The electric bilge pumps are by default in the automatic mode and pump out the bilge once the float-switch is triggered. The electric bilge pumps can also be started manually from the boat’s main control panel.

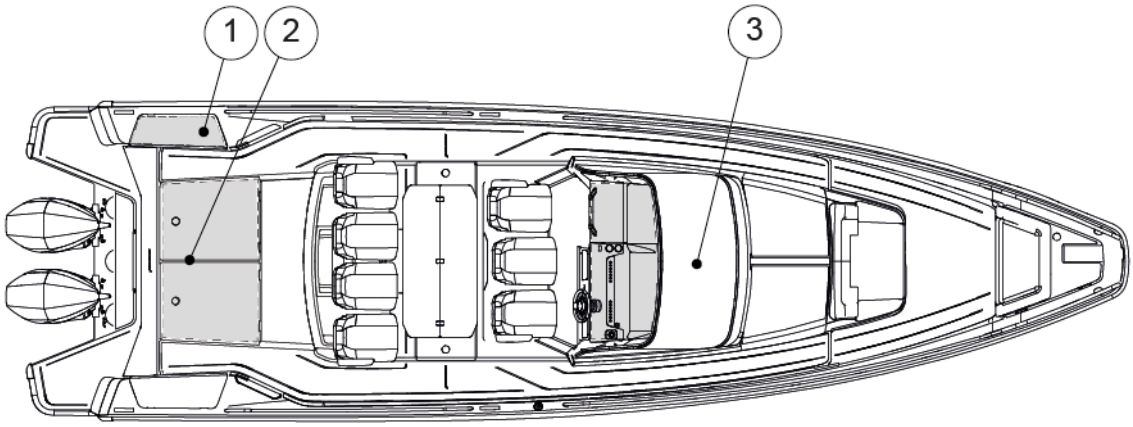

(1) Manual bilge pump
(2) Aft electric bilge pump
(3) Front electric bilge pump

Bilge pump outlets

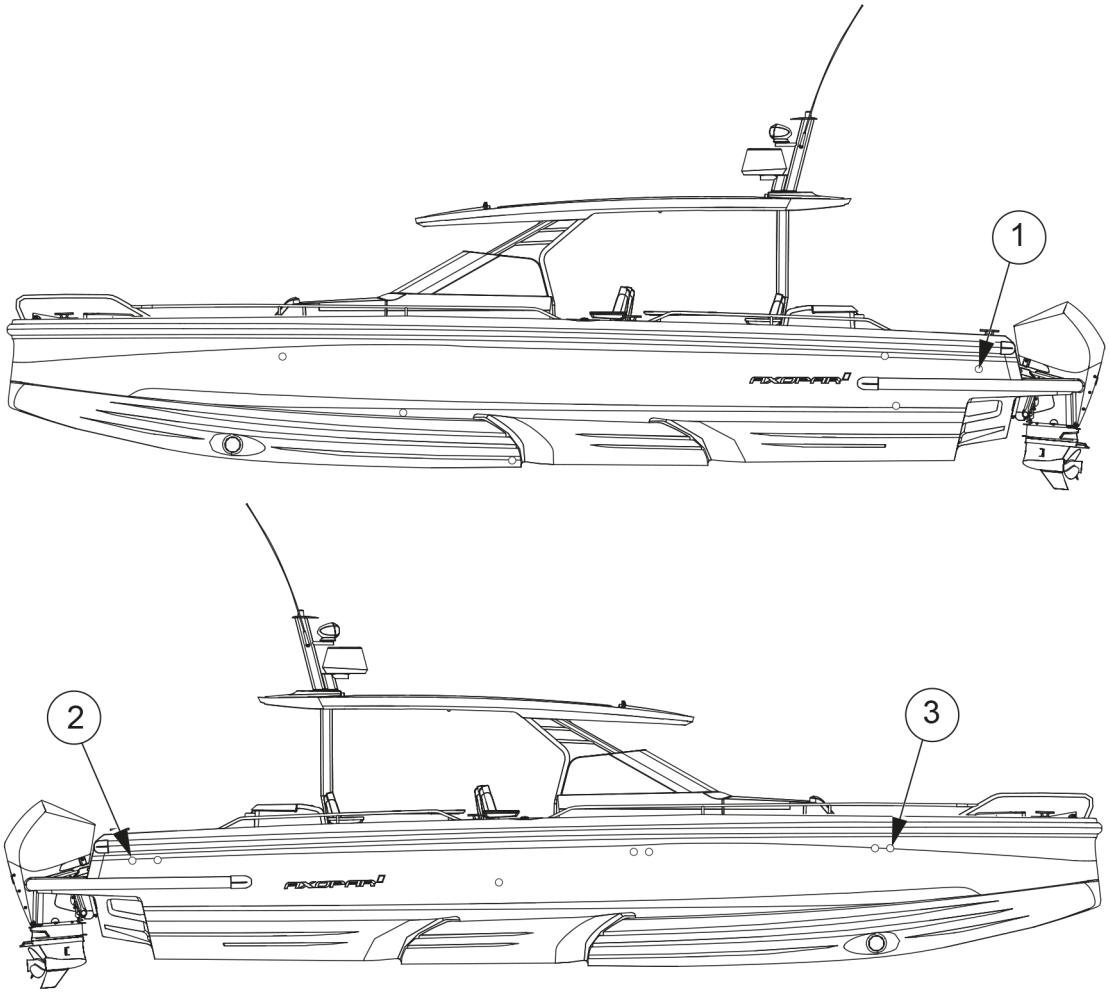

(1) Manual bilge pump outlet
(2) Aft bilge pump outlet
(3) Bow bilge pump outlet

4.2 Technical systems

4.2.1 Electrical system

⚠ WARNING

Risks of fire, explosion and electric shock!

Improper use of electric DC and AC systems may result in fire or explosion.

Improper use of electric AC systems may result in electric shock.

Follow the instructions carefully.

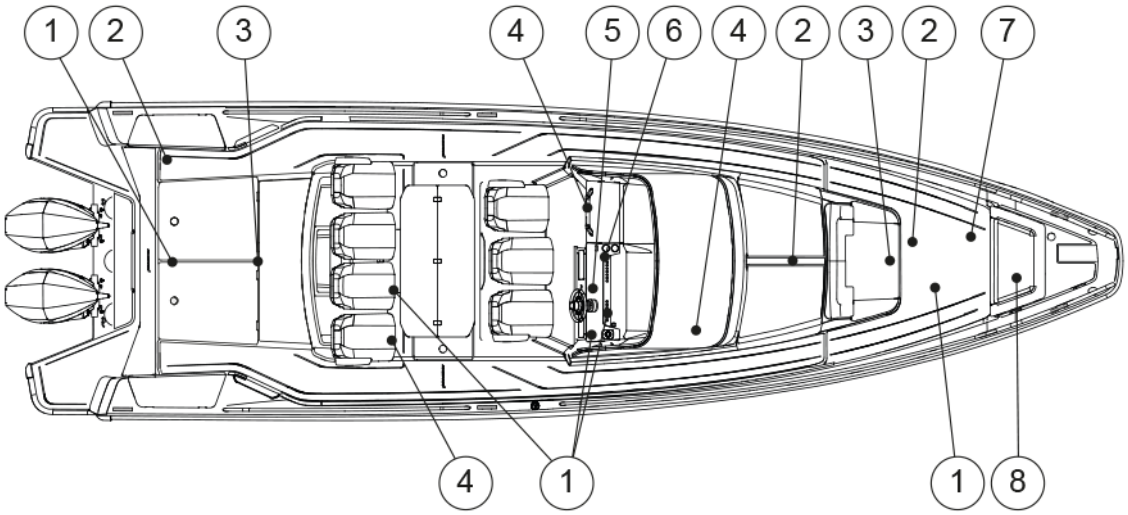

(1) 12 V output
(2) High-current fuses
(3) Batteries
(4) 230 V socket
(5) Remote controlled main switches
(6) Fuse panel
(7) Shorepower charger and fuses
(8) Shorepower socket

4.2.2 12V system

Most of the boat's equipment uses the 12V system.

The 12V system consists of engine driven alternators, batteries and equipment.The 12V system consists of battery chargers for shore-side electricity, batteries and equipment.The power is supplied to the batteries via diodes from either the engine alternator or the shore power charger.

To activate the circuits in the 12V system, the main switches for the corresponding circuits need to be activated and the fuses intact. When the electronic circuit is switched on, the equipment can be operated from the main switch panel.

⚠ WARNING

- Never switch off the main switch when the engine is running, because this may cause damage to the alternator.
- Never carry out electrical installations when the power is switched on.
- Never modify the boat's electrical system or diagrams. Service and maintenance must be carried out by a qualified electrician.
- Never alter or modify the rated amperage of the overcurrent protective devices.
- Never install or replace electrical equipment with components that cause the circuit's nominal rated amperage to be exceeded.
- Never leave the boat unattended with the electrical system energized, except automatic bilge pump, fire protection, and alarm circuits.
- Maintain any damaged equipment before taking it back to use.

4.2.3 Main switches

The different electronic circuits of the boat are controlled by the main switches.

The main switches allow the batteries to be disconnected from all devices that consume electricity. When the main switches are in the **On** position, the current is conducted to the distribution board and from there to different parts of the boat.

When the main switches are active, the text **On** is visible and a led above the text is illuminated.

When you leave your boat for any length of time, switch the current off from all the main switches. Devices that constantly need current are active regardless of the position of the main switches.

The design drawing of the boat's electrical system is presented in appendix ***Electrical diagrams***. The location of the main switches is presented in the section ***Electric system***.

The main switches of the boat are located in driver's seat base. Power supply to the engines and devices is enabled by pulling the Start or Service switch to the lower position and pressing **On** button. There is a main switch for each engine and one switch for Service batteries. Optional bow thruster/windlass has own remote switch. The boat's main switch panel is located in the front row seat base.

Under the aft deck behind the hatches, there are manually operated main switches. These switches are only for emergency use. In normal situations, use the switches in the front row seat base.

Current is fed to the engine by turning the Start switch to the **On** position. The current feed to other equipment is achieved by turning the Service switch to the **On** position, and feed to the bow thruster and windlasses is achieved by turning the Aux switch to the **On** position.

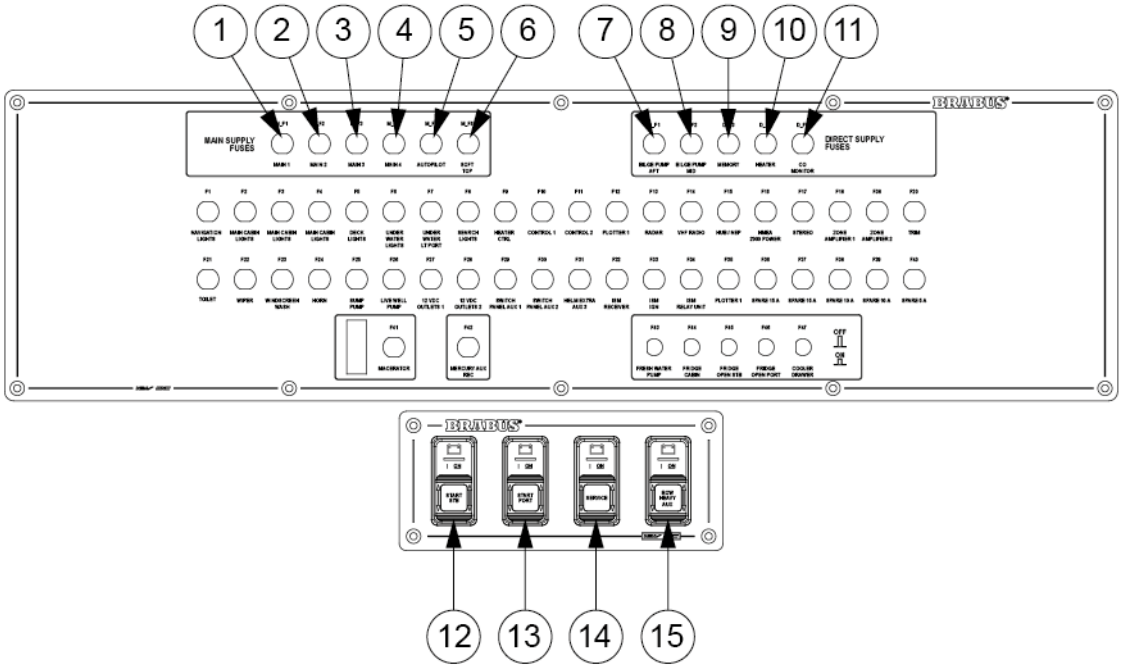

(1) Main fuse
(2) Main fuse
(3) Main fuse
(4) Main fuse
(5) Autopilot
(6) Soft top
(7) Aft bilge pump
(8) Mid bilge pump
(9) Memory
(10) Heater
(11) CO monitor
(12) STB-side engine
(13) Port-side engine
(14) Service
(15) Bow Heavy Aux

4.2.4 Direct supply fuses

Some of the devices in the boat are supplied by direct supply switches. Direct supply switches are intended for such equipment that need current when the main switches are turned off.

When pushed down, the switch is on and when pushed up it is off. The switch indicates a short circuit or interference in the electronic circuit by springing up to the **Off** position. The switch can be reconnected by pushing it back down to the **On** position. Do not reconnect the switch before you have found out the reason for the interference.

The direct supply switches must be left on even if the current from other circuits is switched off. An appliance that is switched off too early may cause the appliance to overheat and become damaged.

⚠ WARNING

Turning the direct supply switch off too early may cause the device (for example, the heater) to break or catch fire, because the devices have a ventilation feature that works even if the device is otherwise switched off.

- Make sure the device is cooled down before turning it off completely. For more information, see the manual of the device in question.

4.2.5 Fuses

The fuse panel includes fuses for the boat's equipment.

The fuses are in the form of trip switches that break the circuit and spring up when tripped. Do not reset the switch before you have found out the reason for the breaker tripping. After that press the switch back down.

The fuse panel is located on the aft wall of the front cabin. The panel has a combined switch and fuse for the macerator, fresh water pump, fridge cabin, fridge open STB, fridge open PORT, and cooler drawer.

⚠ WARNING

Before connecting an electric circuit, make sure that the circuit is not damaged and that there will be no short circuit or a fire caused by possible damages in the electric circuit.

Any damaged equipment must be maintained or changed before they are again taken into use.

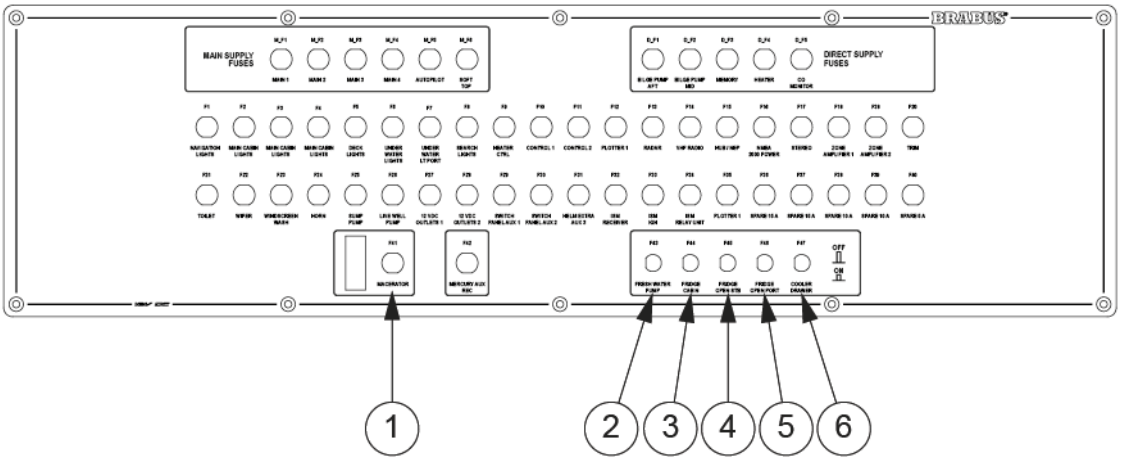

(1) Macerator
(2) Fresh water pump
(3) Fridge cabin
(4) Fridge open STB
(5) Fridge open PORT
(6) Cooler drawer

4.2.6 Heavy duty fuses

There are fuse panels containing fuses for appliances and electronic circuits which require large currents, such as windlasses, in the boat.

The functioning of fuses can be checked from the holes in the fuse's cover. If the metal strip visible in the hole is unbroken, the fuse is operational.

If the metal strip is damaged, meaning that an overload has occurred, contact a qualified nautical electrician.

⚠ WARNING

Opening the cover is not recommended, as there is a danger of electric shock and serious injury.

If the metal strip is damaged, contact a qualified nautical electrician. If it is necessary to open the cover, make sure that all the current cables from the batteries are disconnected.

4.2.7 Batteries

The standard boat is equipped with a start battery only, and a service battery is optional (dual battery system).

The start battery supplies current to the engine and engine-related equipment, and the service battery for other appliances and equipment on the boat.

The batteries are located in the aft of the boat. The exact location of the batteries is presented in the section ***Electrical System***.

⚠ WARNING

Only use maintenance-free batteries in the boat.

- When you leave the boat, switch off the main switches unless the shore power cable is connected.
- Remove the batteries from the boat for winter storage.
  - When removing a battery, detach the negative pole first.
  - When disconnecting batteries, be careful not to touch both poles at the same time with a metal tool.

4.2.7.1 Charging the batteries

⚠ WARNING

- Make sure that the battery compartment is always well ventilated when charging batteries.
- Only charge batteries in the boat with the boat's own chargers. In other cases, remove the batteries from the boat.
- Remember that the batteries discharge an explosive oxy-hydrogen gas at a voltage of 14.4 volts.
  - The voltage of a normal battery in unloaded status is 12.3-12.7V.
  - During charging, the voltage increases and the charging regulator stops the charging process automatically at a preset level.
  - The voltage measurement must be taken at the battery terminals, not the alternator, to achieve the correct result.

4.2.7.2 Winter storage

For winter storage, the batteries can be left on board only if they are fully charged.

A partially discharged battery can freeze and crack. Always disconnect the cable terminals from the battery to avoid oxidation. When removing batteries, disconnect the negative pole first and make sure that there are no flammable or explosive materials or liquids nearby. When putting the batteries back in place, connect them in reverse order (positive pole first).

4.2.7.3 Cleaning the batteries

The top of the batteries needs to be cleaned regularly to avoid current leakage between the cells. If the battery is located in a separate area, it is normally sufficient to clean it in the spring and autumn.

Make sure that the air holes in the cell plugs are open so that gas can be vented.

The terminals and cable terminals must be lubricated to prevent deposits and corrosion.

4.2.8 110/230V system

You can choose to equip your boat with the optional 110/230V AC system with a shore power connection, which will allow you to use devices that run on the standard mains current.

The system obtains its power from an external supply on shore or from the jetty (shore power). In the European market the system used is 230V and in the American market 110V.

The system functions when a shore power cable has been connected to the shore power socket connection.

1. Turn off the shore power switch before connecting or disconnecting the cable.
2. Connect the shore power cable to the boat before connecting it to the shore power.
3. Disconnect the shore power cable from the shore power before disconnecting from the boat.
4. Close the hatch of the boat’s shore power connection.

⚠ CAUTION Unplug the shore power cable before starting the engines. Starting the engines with the shore power cable connected may break the battery isolators.

The system's main fuse is located in a separate control panel. The system includes a battery charger, which starts charging batteries automatically when the boat has been connected to shore power. The location of the components is presented in the section ***Electrical System***.

The shore power system needs to be checked at least biannually. Always disconnect the shore power cable when the system is not in use. Metal casings of installed electrical equipment must always be connected to earth in the boat electrical system. Use electrical equipment equipped with earth protection only.

⚠ DANGER Risk of electric shock and fire!

- Do not touch an energized high voltage system.
- Do not change the plug of the shore power cable. Use compatible connectors only.
- Try to minimize the risk of electric shock, short circuit and fire.
- Do not allow the shore power cable to hang in the water. If it does, a hazardous electric field could be created in the water.
- Never modify the connections on the shore power cable. Use compatible connectors only.
- If the earth fault breaker is tripped, disconnect the shore power cable immediately. In such a case contact a qualified electrician for repairs before the system is used again.

⚠ DANGER To avoid an electric shock and risk of fire:

- Switch off the shore power switch before connecting and disconnecting the cable.
- Connect the shore power cable to the boat before connecting it ashore.
- Disconnect the shore power cable ashore before disconnecting it from the boat.
- Close the hatch to the shore power socket on the boat carefully, avoiding getting it wet.

4.2.9 Fuel system

The boat has a fixed fuel system and a water-separating fuel filter on the suction line.

Instead of the fuel system used in the European region, the boats produced for the American region use the EPA (United States Environmental Protection Agency) fuel system regarding the NMMA (National Marine Manufacturers Association) certification rules.

See the fuel system drawing in appendix ***Fuel system***. For care and maintenance of the fuel system, see the instructions in the engine manual.

⚠ WARNING Never start the engines if there is strong gasoline odor present.

⚠ WARNING

Do not smoke or handle open flames when refueling.

Remember that it is not allowed to store fuel in spaces not specifically designed for it. Since there is no ventilated storage space on this boat, possible spare fuel cans must be stored on deck.

Fuel system component locations

- The fuel tank is located in the middle of the keel. Prevent damage to the fuel lines.
- The inlet pipe for fuel is located in the starboard side of the deck.
- If the boat has been equipped with an extra diesel tank, the inlet fitting and tank are located in the aft of the boat.
- The fuel tank valves and the fuel filter are located under the driver's seat. The EPA fuel system is equipped with an automatic fuel valve.

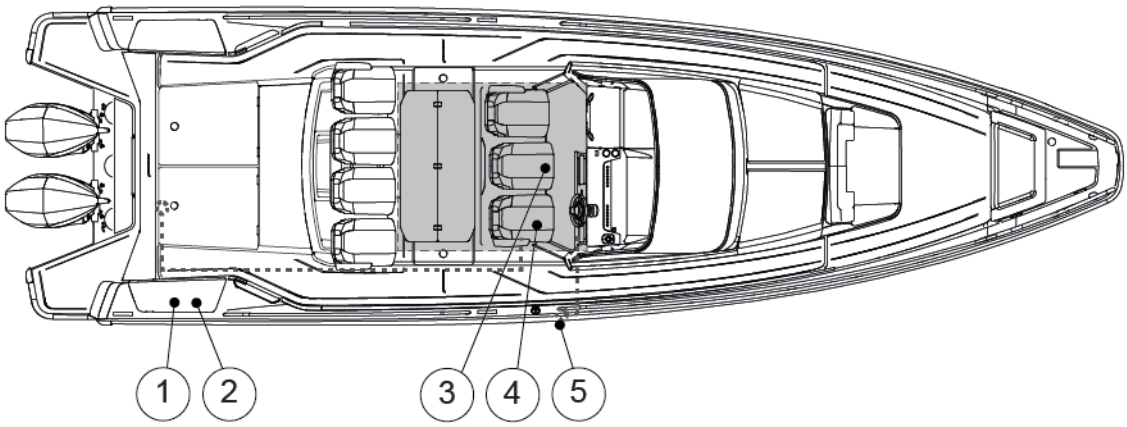

(1) Diesel tank
(2) Diesel tank inlet fitting (under hatch)
(3) Fuel tank
(4) Fuel filter
(5) Fuel inlet fitting

4.2.9.1 Refueling the boat

The boat's engines run on gasoline. Optional heater system uses diesel fuel.

Before refueling, stop the engine and any electrical equipment. Make sure that the boat is securely docked.

Wet down the composite decks with water before refueling. This ensures that any fuel spillage will float on the water and not penetrate the decking material.

Never leave the nozzle unattended during fueling. The nozzle will automatically shut off when the tank is full. Do not try to top off or overfill the tank.

After refueling, make sure the tank cap is properly closed. Before starting engines, ventilate areas where gasoline vapors may have accumulated.

Water reaching the engine's injection system can cause rapid corrosion damage to the precision components in the injection pump components. For this reason, it is vital to check the extra fuel filter regularly for water. Every so often, drain a small quantity of fuel into a suitable container (avoid fuel spillage) and check that there is no condensation water. If there is water in the filter, continue to drain until only clean fuel appears.

The fuel system on the engine is sensitive to air bubbles in the fuel. Always fill the tanks well before they are completely empty. If the system has been run dry, it must be bled before the engine can be started again. See the engine manufacturer's instruction manual before bleeding the fuel system.

⚠ WARNING

- The fuel system grounding is effective only when the boat is in the water and the system is filled using the nozzle. If filling from canisters, only use plastic containers and pay attention to not overfilling the system. Do not top off.
- Never block access to safety equipment, fire extinguishers, fuel valves or main power switches.
- Never block any ventilation openings made in the boat because their purpose is to clear the air of fuel fumes.
- Never use a wrong type of fuel in the heater or cooker as this may damage them.
- Never use an open flame when detecting leaks.

4.2.9.2 Maintaining the fuel system

Follow the engine manufacturer’s maintenance schedule.

- Annually, check the condition of the hoses and make sure that there are no visible cracks, abrasion, or deterioration.
- Replace worn parts with genuine, marine-grade parts only.
- Bi-annually and for winter storage, check the fuel tank compartment for possible accumulated water. This can be done by inserting a thin hose through the aluminium pipe at top of the tank. The pipe guides the hose to the lowest part of the fuel tank compartment. The compartment can then be emptied with wet-dry vacuum cleaner connected to the hose.
- Bi-monthly, inspect the fuel system for presence of water in the fuel tank.

  Presence of water in fuel can be checked by inspecting the contents of the fuel filter.

  If any water is found, it must be removed and the whole fuel tank dried before the tank can be refilled with fuel.
- Examine the fuel tank and lines for corrosion and leaks.

4.2.10 Freshwater system

You can choose to equip your boat with an optional freshwater system.

The freshwater system consists of a fresh water tank, pump and filter. The fresh water tank is filled via the filling cap.

The freshwater system is turned on by switching on the freshwater pump. The system maintains a working pressure automatically, which is why the pump does not need to be shut after use.

- Switch off the system when the boat is left unmanned.
- Check the filter regularly.

Antifreeze is added during production phase of the boat, and the dealer is responsible for disinfecting the freshwater tank before sale.

NOTICE

The water from the system is not meant for drinking.

The freshwater system must be thoroughly emptied for winter storage.

It is not recommended to use any anti-freeze products in the freshwater system.

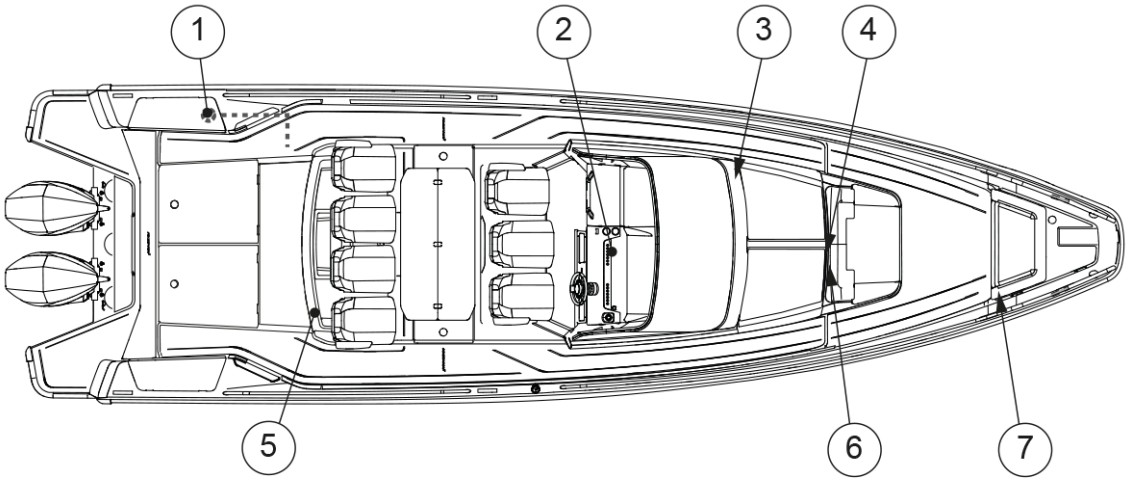

(1) Deck shower
(2) Pilothouse pantry tap
(3) Freshwater pump
(4) Freshwater tank
(5) Wetbar tap
(6) Switch for water system
(7) Freshwater filling cap

The water pump has air release valve which should be slightly opened to facilitate priming when starting the pump or emptying the tank. Once the pump operates normally, the valve should be closed.

The water pump has also two LEDs indicating the operating status and faults in the pump operation. For more information about the signals, please refer to manufacturer's manual.

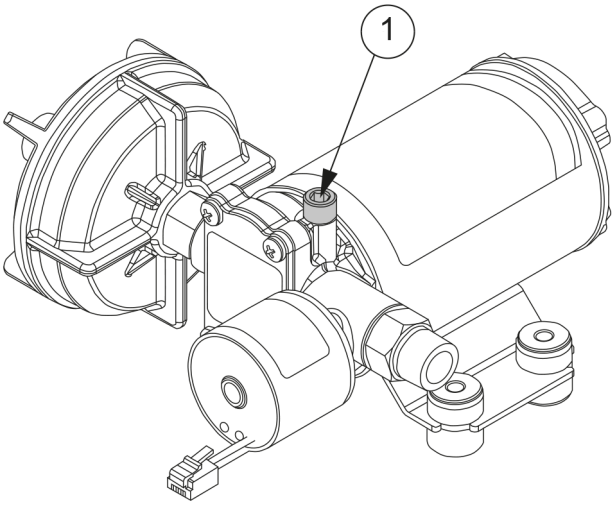

Figure 4.1 Water pump and air release valve

Freshwater system needs to be disinfected and flushed annually or after longer periods of non-use to keep the system in working order.

Disinfection procedure is described below:

1. Flush the entire system thoroughly by running potable water to flow through it.
2. Drain the system completely.
3. Fill the entire system with disinfecting solution and follow the manufacturer's instructions.
4. Drain the entire system once disinfection process is complete.
5. Flush the entire system thoroughly several more times with potable water.
6. Fill the system with potable water. Freshwater system is now ready to be used.

Maintenance

Annually inspect hose connections, tube fittings and pump electrical wiring connections for proper securing and no chafing. Water pump inlet filter is recommended to be checked and cleaned annually. Running the system regularly helps keep the water pump's impellers in working order.

4.2.11 Warmwater system

The boat can be equipped with the warmwater system as an option.

The warmwater system consists of a water boiler and associated hardware.

The water boiler is located in the bow of the boat, behind a sealed hatch in the anchor box.

To reach the boiler, unscrew the screws in the service hatch.

Switch on the water boiler from the switchboard located in the anchor box.

- Switch on the freshwater pump before switching on the water boiler.
- Operating the water heater empty damages the system.

Adjust the water temperature by rotating the thermostat dial mounted on the boiler.

⚠ WARNING Water might reach scalding temperature if the thermostat is set to high setting (above 5).

For more information on the thermostat adjustment, see the manufacturer’s manual.

Maintenance

See the manufacturer's manual for maintenance instructions for the water boiler. Inspect the boiler's hose connections regularly for signs of leaks.

4.2.12 Septic system

The boat's septic system consists of the toilet seat, the septic tank and the related systems.

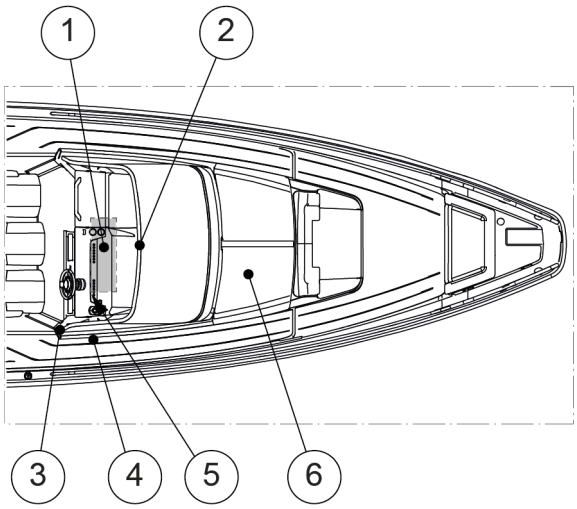

(1) Septic tank
(2) Shower sump pump
(3) Deck suction fitting
(4) Macerator pump
(5) Toilet
(6) Septic tank seacock

Maintaining the macerator

The macerator pump can get stuck if it is not used for extended periods of time. Regular use of the macerator helps to prevent this from happening.

If the macerator pump gets stuck, please contact your dealer for repairs.

4.2.12.1 Toilet seat

The boat is equipped with an electrical toilet seat system that uses fresh water.

NOTICE

- Never put any other objects but toilet paper in the toilet.
- In order to avoid damages, you must also not pour hotter than lukewarm water into the toilet.
- It is under no circumstances allowed to flush paper towels, fabric or rubber products, hard objects, oil products or solvents down the toilet.

Using the electrical toilet

The electrical toilet is used with a separate operating switch. For more information on the device, see the manual for the toilet.

Maintaining the toilet

- Clean the toilet with a mild cleaner.
- Never use cleaning agents or deodorants which contain pine oil, formaldehyde or chlorine, nor corrosive or petroleum-based agents.

  These materials can damage the plastic and rubber parts in the toilet.
- Lubricate the pump shaft with Vaseline to increase the service life of the seal.
- Flush the toilet system thoroughly with fresh water when the boat is not in use.

4.2.12.2 Septic tank

Avoid environmental pollution!

The blackwater tank is fitted with a deck outlet pump using an international standard type connection. Using the pump, the black water can be emptied to a permanent septic tank ashore. These facilities must always be used.

In areas where there are no permanent septic tanks, the macerator is used to evacuate the contents of the tank straight into the water as follows: Open the sealed seacock. If possible, empty the tank daily and always in deep waters far from the shore. For the location of the pump, see the section ***Septic system***.

The shut-off valve must be closed after the evacuation.

Do not allow the tank to become full. It can lead to paper becoming compacted in the bottom of the tank, making it more difficult to empty.

NOTICE

Before the boat is laid-up for winter storage, the whole system must be cleaned and flushed thoroughly while the boat is still in the water.

The whole system must be thoroughly drained of water when the boat is lifted out of the water.

This measure prevents frost damage, bacteria growth and smells.

Use of antifreeze is not recommended, since it is impossible to guarantee that it reaches all parts of the system.

4.2.12.3 Shower sump pump

The boat's shower floor is equipped with an automatic drainage pump.

The pump starts automatically when there is water on the shower floor. The pump drains the water from the boat's shower into the sea as the shower is below the waterline.

Regular checks

- Clear the shower sump pump regularly of any accumulated debris and hair.
- Test that the float switch is in working order.

Before winter storage

- Empty the shower sump pump of water.

4.3 Optional equipment

This section presents the optional equipment and systems available for the boat.

4.3.1 Air conditioning

The boat can be equipped with a 230V/110V air conditioning (AC) as an optional system. Depending on the selected setup, the air conditioning allows climate control in the main cabin, the front cabin, and the aft cabin.

The optional air conditioning system consists of an air conditioning unit, a water pump, a strainer, a water intake valve and a ducting arrangement.

The air conditioning is controlled by control panel displays located in the main cabin and front cabin. When you set the desired temperature from the control panel displays, the unit automatically activates when the ambient temperature goes over or under the set value.

Before starting the unit:

- Ensure the sea water intake valve and the sea water outlet valves are open. The location of the valves is presented in the section **Openings in the hull and deck**.
- Ensure that the air conditioning circuit breaker is switched on.

NOTICE

Running the air conditioning unit when the water intake valve is shut can cause the unit to overheat and get damaged.

Maintenance

- Check and clean the air filter near the air conditioning unit monthly.
- Inspect the sea water circuit regularly for leaks.
- Inspect the electrical wiring and electrical connections annually for corrosion and firm seating.
- Coolant refills should be performed by a certified service provider.

Refer to the supplier’s manual for complete operations, maintenance, and warranty instructions. In case of the air conditioning unit fails, please contact your boat dealer.

4.3.2 Wet bar in port fender box

You can choose to equip your boat with an optional wet bar in fender box. The wet bar is in the boat's port side fender box.

Wet bar is equipped with a faucet, sink, and a cooled compartment. The fresh water in the wet bar is either cold or cold/warm water depending on whether warmwater system is installed or not.
The cooling unit for the cooled compartment is located towards the bow from the fender box.
The shut-off valve for the sink drain can be accessed via the round inspection hole at the bottom of the cooled compartment.

Maintenance

- Inspect the faucet for leaks or drips.
- Clean the sink and faucet with a mild detergent, avoiding abrasive materials that could scratch the surface.
- Drain and flush the water system to prevent any buildup of sediments or bacteria.
- Check the cooled storage box for consistent temperature and operational efficiency. Clean the interior with a soft cloth and a solution of baking soda and water to eliminate odors and stains.
- Annually ensure all connections, including water supply lines and drain pipes, are secure and free of corrosion.

4.3.3 Navigation system

Your boat can be equipped with multifunction displays (MFD).

Depending on the boat configuration, the boat is equipped with single or multiple screens.

The multifunction display can be used to show electronic charts, plot courses, and navigate the boat. It also acts as interface for marine electronics and other digitally enabled equipment on board.

Refer to the supplier’s manuals for complete user instructions and maintenance instructions of these functionalities and equipment.

4.3.3.1 VHF equipment

VHF radio allows instant communication between your boat and other boats, marinas, bridges, and maritime authorities.

The VHF radio is the recommended means of communication on the coastal waters, and it transmits messages on high frequency waves. The VHF system consists of a VHF radio unit near the drivers position and a radio antenna located either on the mast or on the roof of the boat depending on the boat model.

Study the provided booklet for the local regulations and the functionalities related to the use of the VHF system.

For your safety, make sure the VHF system is operational before going out to open sea.

4.3.3.2 Radar

Use the radar in poor visibility conditions, such as fog, rain, or darkness. The radar helps to identify shorelines, fixed obstacles, and other vessels, and to assess their distance and bearing. Effective use of the radar requires that the operator is familiar with the device's operation and settings in order to interpret observations correctly.

For safety reasons, it is important to remember that the radar is an aid and does not replace visual observations or good seamanship. The radar display should be monitored regularly; however, a continuous lookout must also be maintained.

4.3.4 Bow thruster

The bow thruster enhances the maneuverability of the bow when docking or performing other maneuvers that require increased operator control.

The bow thruster is located under the front deck inside the front cabin.

The bow thruster is powered by the Aux battery. The main switch is located in the seatbase.

The control switch is located in the steering console.

The batteries must be disconnected from the electronic circuit before changing a fuse. For more information, see the manufacturer's manual.

⚠ WARNING

Incorrect use may cause overheating and short circuiting, and pose a fire risk.

- Use the bow thruster for only short periods at a time.
- Do not exceed four duty cycles (max. 30 seconds long in 25 mins).

If overloading occurs, contact a qualified marine electrician.

⚠ WARNING

- Do not touch the bow thruster or its fuse if the Aux main switch is switched on.

⚠ DANGER

Pinching hazard

Never put your hand or any other body part near a windlass or bow roller in operation.

4.3.5 Anchor windlass

The boat can be equipped with a bow, and in some cases aft, anchor windlass (optional equipment).

Operation

To operate the windlass, windlass breaker must be switched on.

Windlass is operated with a momentary switch. Pushing the up button will raise the anchor and pushing the down button will lower the anchor.

If there is a loss of power to the windlass, check the windlass breaker to see if it needs to be reset. If the breaker keeps tripping after it has been reset, the anchor windlass system is recommended to be inspected by a qualified electrician.

The anchor windlasses are powered by the Aux battery. The battery and its fuse are located in the bow of the boat.

⚠ WARNING

- Do not touch the anchor windlass or its fuse if the main switch Aux is switched on.
- Even if the current is switched off, do not change the windlass fuse. The high current may cause a fatal electric shock.

Manual operation

In case of loss of power, the windlass can be manually operated by disengaging the clutch. Please refer to the manufacturer's manual how to operate the windlass manually.

Before using the anchor windlass

Always check that:

- The windlass is in working order.
- The anchor chain can move freely.
- The anchor and the chain cannot damage the boat when lowered.
- The anchor and anchor chain cannot hit any person.

For more information, see the manufacturer's manual.

While under way

The anchor windlass must be fixed mechanically to prevent it from coming loose when the boat is moving. For more information, see the manufacturer's manual.

⚠ WARNING

Pinching hazard

Never put your hand or any other body part near a windlass or bow roller in operation.

⚠ WARNING If the windlass loosens when the boat is moving at great speed, it may cause great damage to the boat, its passengers and outsiders.

- Always fix the anchor windlass mechanically in place before getting under way.

⚠ WARNING

- Keep all body parts and clothing away from an activated windlass.

NOTICE

- Do not use the windlass to pull or tow another vessel.

Maintenance

Salt deposit accumulating on the windlass should be washed away with fresh water regularly to prevent corrosion. For more information, please refer to the manufacturer's manual.

4.3.6 LPG system

The boat can be equipped with an LPG system for a cooker as an optional extra. The system is tested and approved before delivery.

The system consists of a cooker and gas cylinder. The apparatus is equipped with a shut-off valve (in connection with the cooker) and a decompression valve. A ventilation hole is provided on the outside of the hull in the space where the gas cylinder is installed. A fire blanket must be installed right next to the cooker.

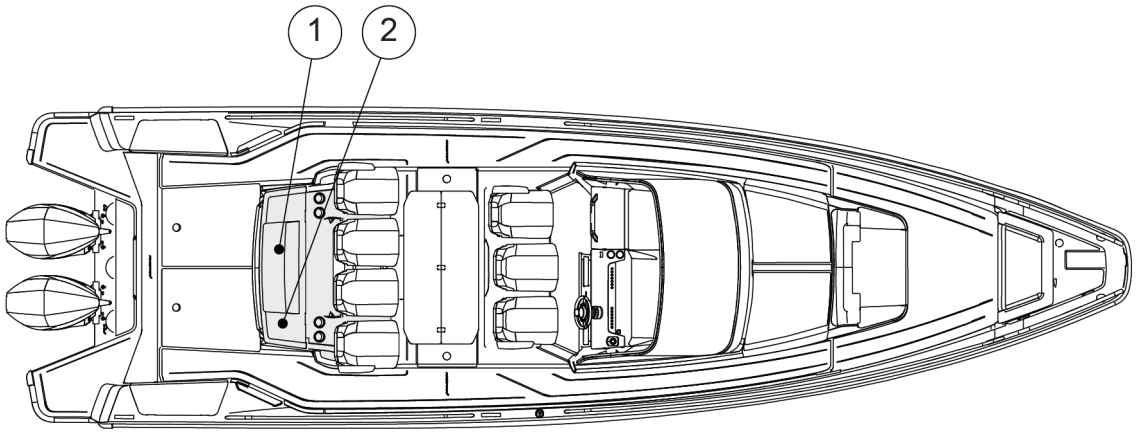

(1) Cooker
(2) Gas cylinder

Fuels that produce a naked flame consume oxygen and discharge combustion products into the boat. Good ventilation is therefore essential when an appliance is in use. If cooker is installed inside cabin, ensure good ventilation and keep doors open.

LPG cylinder housing shall not be used for storage of any other equipment.

⚠ WARNING

When installed inside, fuel burning open flame appliances consume cabin oxygen and release products of combustion into the craft; do not use the stove for space heating. Ventilation is required when appliances are in use. Never obstruct any ventilation openings. The ventilation requirements have been calculated to suit the LPG appliances as installed.

- Before opening the valve to the gas container, make sure that the appliance valves are properly closed.
- Store the fire blanket in the required location.

4.3.6.1 Using the LPG cooker

Follow these instructions to safely use the LPG cooker.

Ventilation

Appliances which burn fuel consume oxygen and discharge combustion products into the boat. Good ventilation is essential when an appliance is in use.

- Never use the LPG cooker for heating the boat.
- Never cover the ventilation openings.

Lightning the LPG cooker

1. Ignite the burner by pushing the knob down. Then turn the gas knob to its maximum position, listen for the gas flow, and hold the knob down.
2. Light the flame by lighting the burner with a match, lighter, or built-in ignition system. Keep pushing the knob for 10 seconds. If released earlier, flame sensor might shut down gas.
3. Adjust the flame by turning the knob to the desired size.
4. Turn off the LPG cooker by turning the knob back to its original, off position to stop the gas.

Always read the manufacturer's operating instructions for your specific cooker model.

Use pots and pans that are the appropriate size for the burner to prevent spillage and ensure efficient heat use. Keep combustible material like plastic containers and dry ingredients away from cooker. Clean the cooker after use.

Valves

- Close the valves on the supply pipes and the container valve when the appliance is not in use.
- Close the valves before refuelling and immediately in an emergency.
- Check that the appliance valves are closed before opening the container valve.
- Keep the valves of empty cylinders closed and disconnected.
- Fit the protective covers, caps or plugs.
- Store spare or empty cylinders on the open deck or in drained areas designed for the purpose.

Replace the regulating valve every 10 years.

The valve contains a thin rubber diaphragm which eventually dries out or swells up. If the diaphragm breaks, gas can escape from the cylinder with full pressure into the system, thus causing a fire.

Inspections

System has pressure gauge installed to LPG cylinder connection. LPG system shall be checked for leakage before each use.

- Close appliance valve.
- Open LPG cylinder valve.
- Allow indicated gauge pressure to stabilize.
- Close LPG cylinder valve, and observe pressure gauge reading for 3 min.
- Pressure gauge reading should remain constant if no leak in the LPG system is present.
- Gauge does not provide an indication of liquid LPG remaining in the cylinder, only its vapor pressure, which is a constant at any given temperature.

If LPG leakage is detected or suspected, the following action shall be taken immediately.

- Shut off the LPG supply at the main supply valve.
- Extinguish naked flames and other ignition sources (heaters, cooking appliances etc.).
- Do not operate electric switches.
- Evacuate the area if possible.

Inspect the hoses and pipes in the system regularly, at least once a year.

- Replace parts if there is any deterioration or damage.
- Replace the LPG hoses outside the cabin every second year, and the LPG hoses inside the cabin every 3 to 5 years.
- Check the flue ducts at least once a year.
  - Replace the flue ducts if there is any deterioration or damage.
- Check the connection gaskets for the regulating valve always when containers are replaced, and replace the connection gaskets annually.

⚠ WARNING

- Never use an open flame when detecting leaks.
- Do not use solutions that contain ammonia for manual leak testing.
- Never smoke or use open flames when a gas container is being replaced.
- If a leak is detected, shut off the main LPG supply valve and do not use LPG appliances.
- Do not use an installation that has leaked until it has been inspected and repaired by a competent person.

Maintenance

For the LPG cooker maintenance schedule and instructions, see the manufacturer's manual.

⚠ WARNING

- Keep the LPG container in a space designed for it.
- Never leave the boat unattended when LPG appliances are in use.
- Do not smoke or use open flame when replacing LPG cylinders. Close cylinder valves on empty cylinders before disconnecting for replacement.
- Do not modify the craft's LPG system. Installation, alterations and maintenance shall be performed by a competent person. Have the system inspected at regular intervals or as required by national requirements.

- Make sure that you always have free and rapid access to the LPG system.
- The ambient temperature for LPG systems is –20 - +60°C.

NOTICE Never use a wrong type of fuel in the cooker as this may damage the cooker.

4.3.7 Solar panel trickle charger

The boat can be equipped with solar panel trickle charging system. The system allows you to maintain and slowly charge the batteries on the boat.

The solar panel is located on the bow end of the roof. The trickle charging system includes a charge controller, preventing battery overcharge. The charge controller is installed in the battery compartment wall.

Maintenance

Ensure that the solar panel is mounted properly. Check for any dirt, debris, and corrosion on the panel. Periodically clean the solar panel with water.

Do not use chemicals, as they can damage the panel.

4.3.8 Roof racks

The boat can be equipped with roof racks.

Roof racks allow for transportation of bulkier objects such as kayaks or bicycles. Objects put on the roof racks must be secured tight to prevent them from falling off or damaging the boat’s roof or other components.

Load limit of roof racks is 25 kg / 55 lbs per roof half. Max. load of roof racks is 50 kg / 110 lbs.

4.3.9 Full RGB lighting package

The boat can be equipped with optional full RGB lighting package. The package includes deck lights, LED strip lights, and underwater lights which are controlled via the chart plotters and/or auxiliary control panels onboard the boat.

The full RGB lighting pack allows the personalization of vessel's appearance by selecting the color and intensity of lighting in the vessel. The system is designed for integration with the vessel's multifunctional display (MFD), enabling control of the lights through a dedicated control app.

To operate the lights, use the designated app on the multi-function displays or control panels, which provide an interface for adjusting colors, brightness, and lighting patterns.

The app also allows for the creation of custom lighting scenes, allowing for quickly switching between presets to match the occasion.

Maintenance

Regularly inspect all light fixtures for signs of corrosion or damage, especially after exposure to harsh weather.

Clean the lights with a soft, damp cloth to prevent salt buildup, which can lead to corrosion.

4.3.10 Sunshades

The boat can be equipped with canvas sunshades to provide shade in the aft and bow of the boat.

The sunshades are only for stationary use and must be stowed away before the boat is driven.

Depending on the boat model, the sunshade poles are stored in spring clips on top of the roof or inside a hatch.

Setting up a sunshade

1. String the loops of the sunshade to the ends of the support poles.
2. Mount the support poles on the gunwale sockets.
3. Connect the canvas clasps to the D-rings on the roof.
4. Adjust the tightness of the sunshade so that it’s tight.

4.3.11 Lithium power bank

The boat can be equipped with optional lithium power bank. The power bank is integrated with the boat's electrical circuit, providing electrical power for AC devices when shore power is unavailable, such as when you are out on the sea. The system includes lithium battery bank, inverters, battery chargers, and battery management system (BMS) in one package.

The lithium power bank is in the centerline deck recess of the boat. The power bank manual main switch is located next to the power bank, and remote battery switch is located next to the remote switch panel.

The power bank is charged by the engines, optional solar power trickle charger, and shore power.

Maintenance

To maintain the power bank's efficiency, regularly check connections for corrosion or wear. Never open the lithium power batteries. Ensure the area around the power bank is well-ventilated to dissipate heat

effectively. For long term storage, please see the manufacturer's manual for storage temperature and charge level.

Operation

Operating the power bank is straightforward. Switch on the power bank manual and remote main switches to switch on the power bank and to activate the inverter, which will convert the stored DC power into AC for your appliances. Monitor the BMS for real-time battery status and to manage power consumption effectively. The power bank is equipped with a transfer switch, which allows the current to by-pass the power bank when the boat is connected to shore power.

⚠ WARNING Do not store wet items on top of the power bank.

⚠ WARNING Do not attempt to charge or use a damaged battery.

4.3.12 Axopar connectivity

Axopar Connect app and Axopar Connectivity hardware is available as an option on your boat.

This option provides remote monitoring capability and recording of boat usage as trip logs.

Data sources used for the remote monitoring functionality are the dedicated GPS receiver connected to the Axopar Connectivity hardware and the sensor data from the boats NMEA 2000 network (i.e. engine data).

The system also monitors the operation of the bilge pumps and alerts the user if bilge pump is activated either automatically or manually while underway or when the boat is docked.

System will also alert in case bilge pump runs for an extended period and a certain time threshold has been exceeded.

Notifications for the bilge pump operation are saved in the mobile app's notifications section.

5 Transportation

5.1 Lifting the boat

Lift the boat only with a lifting beam and lifting straps. Use the specified locations for the lifting straps.

Commission only a reputable lifting company or a boat yard with sufficient lifting capacity to lift the boat. Make sure the company has full insurance cover, in case of any damages.

⚠ DANGER

Risk of serious injury or death by falling load.

- Do not stay under the boat when it is hanging in the crane.

Lift straps may slip on the hull. When appropriate, tie the straps together before lifting.

The position of the straps may need to be adjusted depending on how the boat is loaded.

In addition to the boat's own weight, take into account the equipment and other possible loads in the boat.

⚠ CAUTION

Note the location of the log transducer to avoid damaging it.

- Protect the hull sides well to avoid damages.

The lifting beam must be exactly the same width as the boat. Always take great precautions near and around the boat when lifting.

⚠ CAUTION

Risk of damage to the hull.

Do not lift the boat with a forklift.

The location of the lift straps is indicated in the figure.

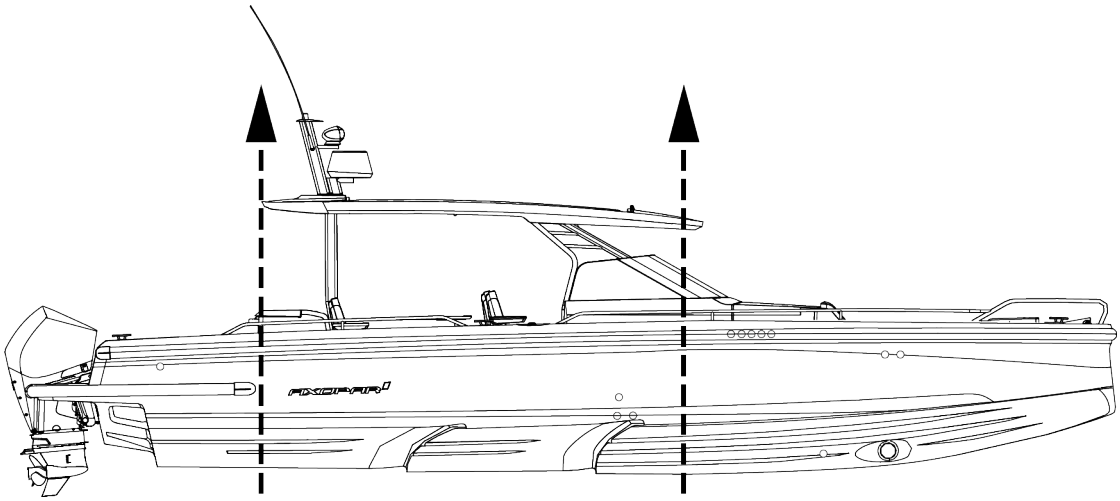

Before operating any lifting equipment:

- Check and determine applicability of federal, state, or local requirements.
- Follow the lift equipment manufacturer’s requirements and recommendations.
- Check the boat's lift points, weight and other information.
- Straddle lift operation is a highly technical area that requires trained and experienced operators.

During lifting:

- Check the boat for bilge water before lifting.

  Excessive quantities of bilge water can shift, changing the balance of the load.
- Check for thru-hull appendages such as knot meters and stabilizers, rub, spray, and splash rails, so that they are not damaged by the lifting equipment.
- Check the hull structure to locate shafts, rudders, struts, and the forward and aft ends of any keels.
- Check the hull’s structural configuration, including the location of bulkheads, stringers, engines, and tanks.
- Check bilges for water ingress following launch.
- Transport the boat as close to the ground as practicable.

5.2 Transporting and storing the boat

Before lifting the boat onto the trailer, make sure that the trailer is suitable for the boat.

Make sure that there is a sufficient number of supports to distribute the weight properly without excessive point loads, and the capacity and dimensions of the trailer are sufficient to carry the boat and its engines, equipment, battery, boating accessories and fuel on board. Pay special attention to exposed areas and edges of hull, such as spray rails and steps in the hull, during loading, deloading and transportation.

⚠ WARNING

A boat trailer that does not have sufficient capacity or that is poorly maintained can become damaged and cause a danger on the road.

- Make sure that the trailer capacity is sufficient to also carry the weight of the engines, fuel and equipment.

⚠ CAUTION

The hull of the boat can be damaged if there is an insufficient amount of supports on the trailer or during the storage.

The trailer must be a little nose heavy. Make sure that the boat is securely fastened to the trailer, that it cannot move into any direction, and that the side supports provide an even support for the weight of the boat.

Before loading the boat on the trailer:

- Remove any unnecessary weight from the boat.
- Drain the bilge water.

- Adjust the side supports of the trailer so that the most weight rests on the keel supports, and the side supports only offer lateral support.
- Protect the boat by placing suitable padding between the tie down straps and the boat, if necessary.
- See the engines manual for any instructions on trailering.
- Make sure that the doors and hatches are properly closed.
- Pay attention to any equipment and accessories in the boat during trailering.
  - Make sure you secure all loose items in the boat.
  - Do not use a hood, canopy, tonneau cover or other similar top or cover on the boat during trailering.

    These hoods and covers can become detached at high speeds and damage the boat and cause a danger to traffic.

    A hood or other cover flapping in the wind during trailering can damage the boat surface.
  - Keep the hood in its dedicated storage compartment during trailering, or remove the hood completely, if necessary.

Boat storing

- Make sure that the bow is slightly elevated when in storage, to help potential water escape the deck.
- Make sure the boat is steadily positioned and secured. The weight of the boat needs to rest on the keel.
- Protect the areas of the hull and deck being supported with some form of padding.
- Keep the engines in a downward position.

6 Operation

The boat owner must take local and international regulations into consideration concerning the boat crew, equipment and handling of the boat. In some countries, a driving license or a separate authorization is required for driving the boat. Special regulations may also apply.

Ensure that the anticipated wind and wave conditions do not exceed the design category of the boat, and that the crew is able to handle the boat in these conditions. Even though the boat is designed for such conditions, they can still be very dangerous. Only a capable, fit and trained crew, using a well maintained boat, can satisfactorily operate in such conditions.

If the boat is fitted with a life raft, carefully read its operation manual. Onboard, the boat must have the appropriate safety equipment according to the boat type and weather conditions. This equipment is compulsory in some countries. The crew must be familiar with the use of all safety equipment and the most important actions in different emergency situations. Sailing schools and clubs regularly organize rescue drills.

The equipment in the boat may differ from the equipment used in the figures in this manual. This might be due to any optional equipment chosen or modifications made after producing this manual. In such cases, contact your local dealer for the operation instructions and additional information regarding the operation of the equipment in question.

Always maintain the boat properly and make allowance for the deterioration that occurs over time and as a result of heavy use or misuse of the boat. Any boat, no matter how strong it may be, can be severely damaged if not used properly. Inappropriate use of this boat not compatible with safe boating is not allowed. It is always important to adjust the handling of the boat to the sea conditions and own boating experience. The gelcoat parts, especially the colored parts, need to be polished and waxed approximately every fourth months to prevent the parts from fading or getting other visual defects.

6.1 Handling devices

6.1.1 Steering console

The controllers are situated so that the driver can easily manage them from the steering console.

The location and quantity of the devices depend on what optional equipment and engine models have been chosen. See the device manuals for further information on the devices.

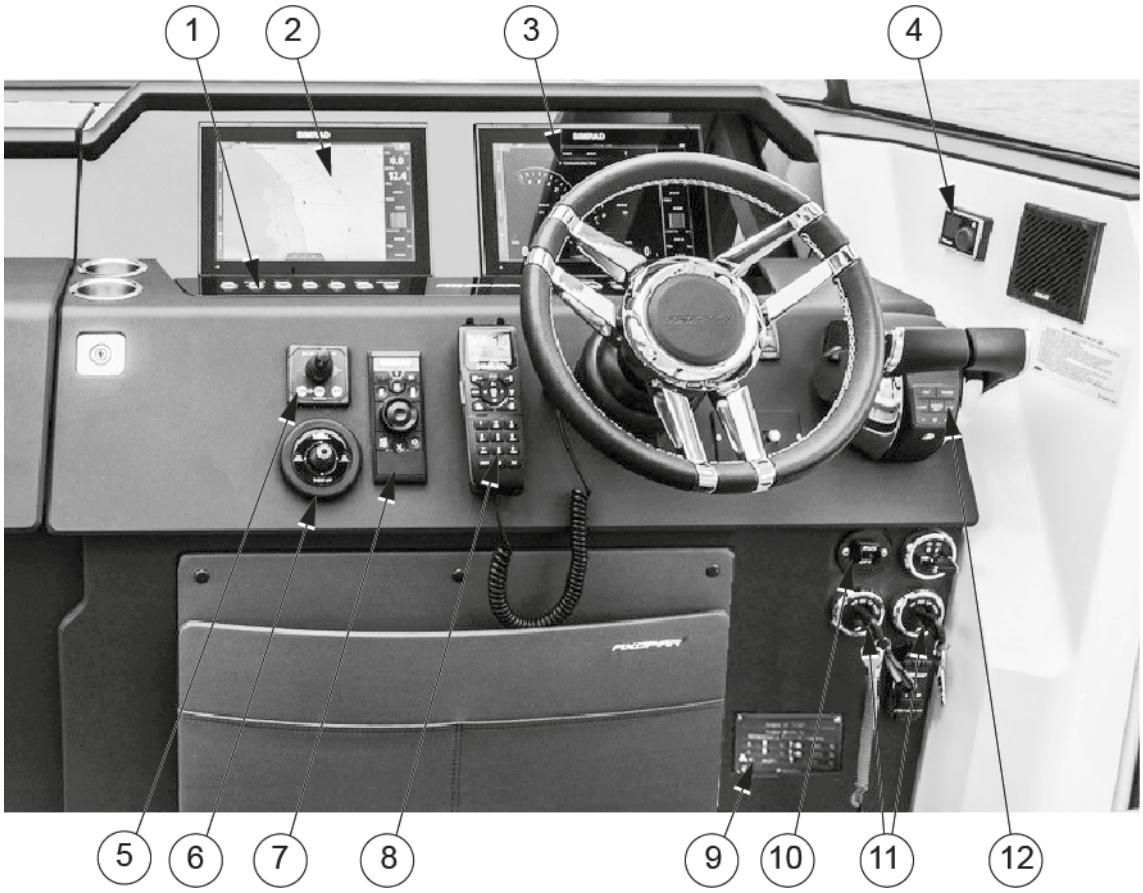

(1) Steering console switch panel
(2) Chart plotter
(3) Chart plotter
(4) Heater control unit
(5) Bow thruster control panel
(6) Trim tabs control unit
(7) Chart plotter remote unit
(8) VHF
(9) Builder's plate
(10) Emergency stop
(11) Ignition keys
(12) Engine remote control

6.1.2 Windscreen wipers

The boat’s windscreen wipers are controlled by the switches in the boat’s steering console.

A switch for the windscreen washer is installed next to the switch for the windscreen wipers.

The windscreen wash-fluid tank is located beside the fresh water tank.

6.1.3 Steering system

The steering system is one of the most vital systems related to safe boating.

The boats are equipped with a hydraulic steering system with the alternatives of power steering and non-power steering systems. Please refer to the collateral manuals provided by the outboard engine and steering system manufacturer included in the manual package provided with the boat.

The non-power steering system consists of a steering wheel, a helm pump, a hydraulic hosing, and a hydraulic steering cylinder.

The power steering system includes a steering pump to help with the handling of the vessel.

6.1.3.1 Checking and topping up oil

Effective and properly working steering is crucial for the safety of the boat.

- Check the oil level in the pump before casting off.
- For detailed instructions and the steering system oil recommendation, see the manufacturer's documentation.

6.1.3.2 Steering maintenance

For the regular maintenance of the steering system components, please refer to supplier’s manual.

If you encounter issues beyond regular maintenance needs, please contact your boat dealer immediately for service.

6.1.3.3 Steering console switch panel

Here you can see details on the steering console switch panel.

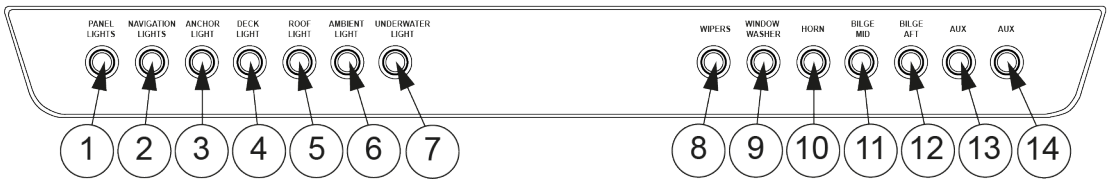

(1) Panel lights
(2) Navigation lights
(3) Anchor lights
(4) Deck lights
(5) Roof lights
(6) Ambient light
(7) Underwater light
(8) Wipers
(9) Window washer
(10) Horn
(11) Bilge mid
(12) Bilge aft
(13) Aux
(14) Aux

6.1.4 Throttle lever

The engine throttle and shift are controlled by the electronic throttle lever. To start the engine, the lever must be in the neutral position. The throttle lever is used to control the engine's RPM which affects the speed of the boat.

Moving the lever forward shifts engine into the forward gear, and moving the lever backwards shifts the engine into the reverse gear. Progressively moving the lever in one direction will increase the speed of the boat in that same direction.

For detailed guidelines about safe boating and component maintenance, please refer to the provided outboard engine literature. If you encounter issues beyond regular maintenance needs, or if noticeable failures occur, please contact your boat dealer immediately for service.

⚠ WARNING Always make sure no one is close to the propeller when starting the engine or engaging the propeller! Acknowledge the information provided on the helm's warning labels.

6.1.4.1 Trim and tilt

The engine can be raised or lowered with the trim controls in the throttle lever.

Raising and lowering the engine is needed when trailering or launching the boat. Adjusting the trim angle of the engine also allows optimizing the run angle for the boat to achieve optimal performance or fuel efficiency.

When raising the engine(s) all the way, make sure the engines are facing straight aft, and no optional equipment such as foldable seats or aft deck gates are in the way.

Refer to the supplier's manuals for detailed operation instructions, maintenance, and warranty information.

⚠ WARNING Raising the engines out of the water without paying attention to surrounding equipment such as aft deck gates, foldable seats or waterski frame may cause damage to the engines.

6.1.5 Starting the engine

See the engine manufacturer's manual for engine information.

1. Set the engine lever in neutral.
2. Turn the ignition on and check the fuel level.
3. Start the engine by turning the ignition key.
4. Check that the gauges for oil pressure and voltmeter show normal values.
5. Run the engine to operating temperature at idling speed. Never rev up a cold engine.

⚠ DANGER Risk of carbon monoxide poisoning.

Be aware of the risks with engine exhausts. For example, under turbulence or disadvantageous wind conditions, exhaust can enter the boat. If this happens, avoid idling the engines. If these problems occur under way, do not open the hatches and ventilators, as it can worsen the problems. Instead, you may try solving the problems by changing the boat's speed or weight distribution.

⚠ WARNING Never step onto the swim ladder when the engine is running. Stop the engine while the steering and propeller are being inspected.

⚠ WARNING Do not operate this boat with an engine that exceeds the maximum engine power recommended by the manufacturer.

6.1.6 Joystick piloting

Your boat may be equipped with a joystick piloting (JPO) system. This system allows you to intuitively control the vessel at slow speeds with the joystick located in the helm area.

Operating the boat with the joystick is well suited for close quarter operations and when docking. The JPO system is ready to be used when the engine remote control levers are both in neutral position and the indicator light around the joystick turns green.

The joystick gives three axis control: fore and aft, port and starboard, and rotational, or any combination thereof. Moving the the joystick to starboard causes the boat to move sideways to starboard. Rotating the joystick causes the boat to rotate around its center. The joystick is proportional, which means that the further the joystick is moved from the center, the more thrust is applied into that direction.

The JPO system also comes with autopilot modes such as Skyhook, auto heading, and route mode (waypoint sequencing).

Please read the manufacturers user manual thoroughly before using any features of the joystick piloting system.

⚠ CAUTION Factors such as wind, water conditions, thruster battery voltage (if equipped), and boat loading may degrade the accuracy and response of the JPO system.

⚠ WARNING Avoid serious injury or death.

Even when engaging autopilot features of the JPO system, the operator must always stay at the helm. The JPO systems autopiloting features does not respond to hazards, obstacles, or swimmers in the vicinity of the boat.

⚠ DANGER Before activating autopilot features such as Skyhook, auto heading or route mode, check that no one is in the water and tell passengers not to enter the water. Stop the engines immediately whenever someone is in the water near the boat.

6.2 Swivel seat - Driver and passenger seats

The driver and passenger seats are operated with locking handles.

⚠ DANGER The locking handles must be in the locked position before the boat speed exceed 5 knots.

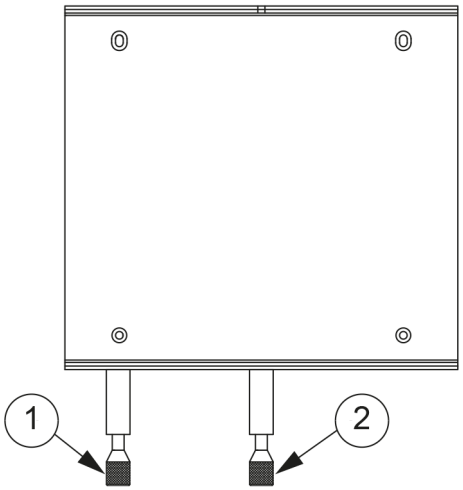

(1) Rotation locking handle
(2) Moving locking handle

- For the rotating function, press the locking handle down to release the lock.

  This allows you to rotate the seat on the post.
- For the moving function, lift the locking handle up to release the lock.

  This allows you to move seat from back to front.

6.3 Inspecting the boat

Due to safety reasons, the below listed inspections must be carried out before and after using the boat.

6.3.1 Checklist: Regular inspection before leaving harbor

Safety

Make sure that:

- All the people onboard have life jackets.
- The wind and wave conditions do not exceed the design category of the boat.
- The emergency stop lanyard is attached to driver.
- There is a fire extinguisher (or several) onboard and their approval/inspection date has not expired.
- The needed ropes and anchor are onboard.

Draining and tightness

Check that:

- There is no water in the bilge.
- All the bilge pumps are functional.
- The bilge has no signs of fuel or oil leaks.
- The deck drain system is clean and the valves are open.
- All deck hatches are tightly closed.

Electrical and engine

Check that:

- All the fuses are intact.
- The main switches are switched on.
- The batteries have enough power.
- The engine works properly.
- The engine cooling water flows as expected.
- The fuel level is sufficient.

⚠ WARNING The specified tank capacity is not necessarily fully available, depending on the trim and load on board. The tank must always be kept at least 20% full.

6.3.2 Checklist: After using the boat

Make sure that:

- The main switches are switched off.
- The septic tank discharge valve is closed.

- There is no water in the bilge.
- The bilge pumps are functional.
- The deck draining works properly and all the draining valves are open.
- All deck hatches, roof canvas and doors are tightly closed.

6.3.3 Notes for sunny conditions for Black OPS boats

The boat requires special attention when it is used in hot and sunny conditions.

In the construction of our boats, we use a high quality Premium Topcoat yacht paint for aesthetic high gloss finish and durability.

If you have selected this coating in a dark color, such as Gunmetal Grey or similar, it is of paramount importance that you are aware of certain maintenance considerations when using your boat in high temperature, high UV or environments exposed to extreme direct sunlight.

Failure to adhere to these guidelines may result in negative issues experienced on board as also voiding parts of the warranty of the boat.

Prolonged conditions of the boat being exposed to direct sunlight upon dark painted surfaces should be avoided as much as possible and care should be taken in environments where ambient temperatures regularly exceed 30 degrees Celsius (86 degrees Fahrenheit), areas near the equator, or where UV radiation is considered strong.

Potential negative impacts in such conditions may include:

- Comfort onboard due to raised ambient temperatures of dark painted surfaces
- Raise of surface temperature on dark painted surfaces to uncomfortable levels
- Decreased air conditioning capacity (if installed)
- Efficiency of refrigerators onboard may be limited, which may cause higher power consumption

⚠ CAUTION In the most extreme conditions, skin burns may result from direct contact with painted surfaces.

Protecting

When the boat is left stationary for a period more than 24 hours, the boat must be protected with the provided Planofil UV protective covers in high temperature conditions stated above.

We recommend that the boat is covered at all times when not in use.

Potential risks if these conditions are not adhered to may include (but are not limited to):

- Damage, cracks, blisters, scratches of fading of the coating and painted surfaces.
- Increased maintenance costs.
- Color change in seating and upholstery materials.
- Deformation or cracks in hatches, bonding areas of deck and hull, carbon fibre and console parts.
- In worst cases, GRP top surface layer delamination.

Any damage or injuries resulting from failures to undertake the outlined maintenance and precautions, or issues that could have been avoided, are not covered under warranty.

6.4 Handling the boat

6.4.1 Checklist: Boat handling before leaving harbor

For safe navigation under all weather conditions, proper sound signaling equipment in compliance with regulations (COLREG, 1972) must be carried on board. Make sure that the sound signaling equipment on the boat is compliant with these regulations.

⚠ CAUTION

According to national regulations in some countries, it is a legal requirement to wear a life vest at all times.

- Check that the boat and its equipment are in seaworthy condition.
- Always listen to long-term weather forecasts when planning longer trips.
- Always make sure there is enough fuel and freshwater in the tanks.
- Check that all items on board are properly stowed and adequately secured to manage rough sea and wind conditions.
- Make sure that the swim ladder is raised out of the water before moving off.
- Make sure that the steering is correctly positioned before starting.
- All persons on board must wear an appropriate life vest when on deck.

6.4.2 Leaving the jetty

Before casting off, consider how to best leave the jetty.

- Check what the wind direction is.
- Using a bow thruster, move the bow out and then engage the propeller.
- If the boat has two engines, move away from the jetty by engaging the engine nearer the jetty astern at idling speed and engaging the other engine ahead at idling speed on.
- The boat will swing out from the jetty astern. As the bow will move against the jetty, fend off properly.

With only one engine this can be a little more challenging, especially if the wind is pressing the boat firmly against the jetty, you have to use a spring to get the stern out.

- Firmly fend off the bow from the jetty.
- Take a line from the bow around a bollard or cleat, so that it can be easily let go.
- Engage idling speed ahead and turn the rudder so that the stern glides out from the jetty.
- When the boat has reached a position, where it can safely be reversed, release and retrieve the line, quickly center the rudder and engage astern.

⚠ CAUTION Gather in all lines and fenders while you are still in sheltered water. A rope around the propeller can disable a boat.

6.4.3 Driving the boat

Going out in a motor boat involves responsibility not just to those on board, but also to others we meet on the water. Showing consideration for others makes boating comfortable. Everyone has the same right to be at sea, whatever kind of boat they go afloat in.

The physical laws that apply to a boat are rather different from, for example, those affecting a car, as are the possibilities of controlling it.

You can influence a boat's behavior and the level of comfort on board primarily by adapting the speed to the prevailing sea conditions and by the intelligent use of the trim tabs. A planing boat rides almost level in the water at maximum speed. As the speed of the boat is reduced the trim angle increases and the bow rises slightly. This is normal, and is a prerequisite for good performance.

6.4.3.1 Emergency stop

If the boat is equipped with an emergency stop, attach its lanyard to yourself immediately after detaching the mooring lines. For more detailed instructions, see the engine manual.

It is very important that the boat stops if you for some reason fall overboard or stumble on board, particularly if you are alone. However, remember to detach the lanyard from your wrist before docking or beaching operations to prevent the engine from stopping unintentionally.

Unintended activation of the emergency stop during normal operation can occur and may lead to hazardous situations, including:

- Sudden loss of forward motion: passengers, especially those seated at the bow, may be thrown forward unexpectedly. In severe cases, individuals could be ejected overboard and risk injury from the gearcase or propeller.
- Loss of power and steering control: this can be critical in challenging conditions such as heavy seas, strong currents, or high winds.
- Reduced maneuverability during docking: unexpected engine shutdown may result in loss of control when approaching docks or other vessels.

The emergency stop is designed to stop the engine immediately if the lanyard is pulled with enough force to detach from the switch. This feature helps prevent accidents if the operator falls overboard or loses control.

To reset the emergency stop, thread the loop at the end of the lanyard around the emergency stop and push the emergency stop back up. The emergency stop can also be reset without the lanyard by pushing the emergency stop back to up position if the situation requires it.

If your boat is equipped with an emergency stop model that cannot be reset without the lanyard, you must keep a spare lanyard on board. Store the spare lanyard near the steering console for quick access. If your boat did not come with a spare lanyard, request one from your dealer.

Always inform passengers about how the emergency system works before departure.

6.4.3.2 Driving at high speed

Although the boats have passed the CE requirements for swerve tests at full speed, BRABUS Marine does not recommend making sharp turns at high speed. When exceeding a certain speed limit

any hull construction might lose its grip. This might lead to passengers hurtling out of the boat, especially in a single engine configuration.

- Do not use the boat if it has an engine with a higher power rating than indicated on the capacity plate.
- Do not drive the boat at high speed if the engine's rig angle is negative (bow down).
- Do not drive at full speed on congested waterways or if the visibility is limited because of weather conditions or waves.
- Reduce your speed and wake as a matter of courtesy, and also for the safety of yourself and others.
- Observe and obey speed limits and prohibitions associated with a swell.
- Follow the rules of navigation and the requirements of COLREG (Convention on the International Regulations for Preventing Collisions at Sea).
- Always make sure that you have the space needed for avoiding collisions and coming to a halt and for evasive maneuvers.
- Always use an emergency stop if available.
- Reduce speed in high seas for increased comfort and safety.
- Learn the boat's speed potential. Utilize this knowledge for economical and safe cruising.
- Avoid using high speed along with large rudder movements when going astern, because that places great strain on the rudder and steering mechanism.
- Avoid sudden steering maneuvers at high speeds.
- Avoid staying in the bow area when driving at high speeds.

Avoid sudden changes in travel direction at high speed. Let the boat come to a stop, and the engine rev down before shifting between forward and reverse. Otherwise excessive strain is put on the engine, which could cause the engine to stop. In the worst case, sea water may enter the engine.

A right-handed propeller rotates clockwise and a left-handed propeller anti-clockwise, seen from the stern. The rotation of the propeller is critical for steering the boat. The right-handed propeller pushes the stern of the boat to starboard when the engine is engaged ahead and to port when it is going astern. The direction of rotation of the propeller has a major impact on the turning radius. A right-handed propeller gives a smaller turning radius to port than to starboard. This is called the propeller's paddlewheel effect.

The boat's propellers have considerable propulsion power that provides powerful acceleration. Take this into consideration to avoid dangerous situations arising from this.

⚠ DANGER

A revolving propeller is life-threatening to a swimmer or a person who has fallen overboard.

Use the emergency stop and turn off the engine when someone is climbing on board.

6.4.3.3 Driving in rough seas

Never go out in rough seas, if you are uncertain whether the boat and those on board can cope. Follow these simple rules.

- Be well prepared.
- Remember to secure loose equipment.
- Always have a sea anchor and other emergency equipment easily accessible.

- Avoid breaking seas that can appear close to land and over shallows.
- If there are significant waves, always reduce speed to guarantee the safety of the persons on board.
- Use the trim tab to trim the bow down to reduce hull slamming in a head sea.

In a head sea

- Adjust speed to suit the size of the waves.
- Adjust the trim angle to the size of the waves. Avoid taking seas beam on.

In a following sea

Remember to keep the bow high in a following sea. Avoid crashing through waves, maintain low speed. If necessary, deploy the sea anchor to reduce speed.

Planing boats can be particularly exposed in rough following seas. The stern of the boat rises and the rudder does not answer, so the boat broaches while the bow cuts down into the sea.

6.4.3.4 Maneuvering in narrow channels

When maneuvering the boat in narrow channels, the engine speed must be kept as low as possible so that maneuvers are calm and steady.

In difficult wind and current conditions, more revs might be necessary to make full use of the power of the engine. In these conditions, it is important that maneuvers are made quickly and precisely to prevent the boat from drifting into trouble for example.

A good rule before starting a maneuver under difficult conditions, is to think through the different situations which could arise. Pay attention to the wind and current conditions and decide in advance which maneuver you will make. It is also important to brief crew members on what they need to do in different situations.

Always keep in mind that the stability of the boat may be reduced when towing.

⚠ CAUTION Even a nonslip molding can be slippery to walk on when the deck is wet.

6.4.4 Visibility from steering position

The International Regulations for Preventing Collisions at Sea (COLREG) demand that a proper lookout is kept at all times, and the *right of way* rule is followed.

The following factors can considerably reduce visibility, among other things:

- Gear trim angle
- Trim tab angle
- Load and load position
- Speed
- Rapid acceleration
- Changeover from displacement speed to planing
- Sea conditions

- Rain and thunderstorms
- Darkness and fog
- Inner lighting when under way in the dark
- Position of curtains
- People and equipment that block the driver's view.

If boat is driven under clear planing speeds, visibility of operator may be blocked by bow. Use of trim tabs and engine trim may be used to lower the bow.

⚠ WARNING Visibility from the seated position is limited. Maintain lookout and control the trim of the boat if needed.

⚠ WARNING Make only small adjustments to trim tab positions at a time. Holding down the button for the trim tab for any length of time can result in partial loss of control of the boat.

⚠ WARNING Visibility from the seated position at the helm station is limited. Avoid serious injury or death from collisions. Operation from a standing position may be necessary to maintain lookout as required by rules of the road.

6.4.5 Using the trim tabs

A boat does not need trim tabs to get up on the plane or to give good performance. However, trim tabs are a very useful aid when used correctly.

There are two situations in particular where the trim tabs need to be used:

- When it is desirable to trim the bow down in a rising sea and at speeds between going up planing and cruising speed.
- When running with a strong beam wind.

A planing boat always leans into a strong side wind. This reduces the boat’s seakeeping qualities, which is why listing to one side needs to be eliminated as far as possible. Lowering the trim tab on the windward side brings the boat back into normal attitude.

For trimming the bow down, both trim tabs are used in parallel. Begin by retracting both trim tabs completely, then lower both of them a little at a time, so that you retain complete control over how the boat is affected. When running with a following sea, both trim tabs always need to be fully raised. The reason for this is that boats have a tendency to “dive” in a strong following sea, which can result in uncontrollable slowing. Therefore you must run the boat with a high bow angle in a following sea.

6.5 Preventing falling overboard

The boat’s working decks are areas where people can move about when the boat is being maneuvered.

The working deck area is shown in grey in the figure.

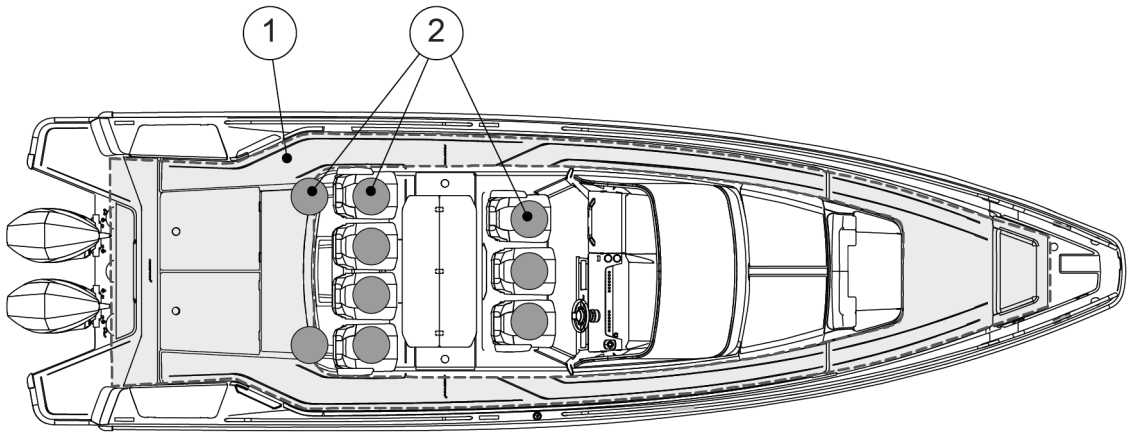

(1) Working deck area
(2) Seats

Do not sit, stand or spend time in other parts of the boat while the boat is under way.

Moving about in the aft part of the aft deck and on the front deck while the boat is under way is not recommended.

If a person has fallen into the water, the easiest way to get back on board is to use the swim ladder. The ladder can be pulled down also from the water.

Staying on deck

⚠ WARNING Staying in the bow of the boat is not recommended in speeds exceeding 30 knots.

⚠ DANGER A revolving propeller is life-threatening to a swimmer or a person who has fallen overboard.

- Use the emergency stop.
- Turn off the engine when someone is climbing on board.

If the sun deck cushions or the front deck table are in place, observe the maximum speed of 15 knots to avoid the cushions or table detaching at speed or in high waves.

6.6 Anchoring, docking and mooring

6.6.1 Fastening points

Fastening points (or cleats) are located both at the stern, midship and bow.

- When anchoring or towing, the forward force is 40 kN.
- When mooring the forward force is 32,7 kN.
- When mooring the rearward force is 27,9 kN.

⚠ CAUTION The breaking strength of lines shall in general not exceed 80% of the breaking strength of the fastening points.

6.6.2 Docking

Always brief your crew how you are planning to dock. Fenders and at least one mooring line fore and aft must be in place before approaching the jetty.

It is always easiest to dock against the wind. Try to hold the bow exactly into the wind and maintain sufficient speed for the boat to answer the rudder. If the bow is blown off in one direction, back out and repeat the maneuver. Bring the bow up to the jetty, and make sure you get a line ashore quickly.

Docking with a side wind is a little more difficult. Do not steer parallel to the jetty letting the boat blow in as there is always a risk of the bow being blown off towards other boats or the jetty. Instead, try to maneuver the boat so that the wind comes directly from astern. Then the boat can be maneuvered straight ahead since the wind helps hold the boat on a straight course. It is good to have someone on the foredeck that can go ashore and quickly turn the bow in the desired direction after the boat has stopped completely.

Try to always avoid sharp movements of the throttle, since idling speed in ahead and astern is generally adequate. Sharp movements of the throttle can lead to panic maneuvers.

⚠ CAUTION The tensile strength of the lines or chains should normally not exceed the strength of the fastening point in question.

6.6.3 Checklist: Before anchoring

1. Check the chart to see if anchoring is permitted in the area.
2. Listen to the weather forecast for the area and take note of the expected wind conditions.
3. Switch on the echo sounder.
4. Study the seabed conditions and make sure that there is good holding ground.
5. Check that the safety chain has been released from the anchor.
6. Wait until you have reached the intended anchoring point before lowering the anchor.
7. Let out the anchor line equal to at least three times the depth of the water.
8. Put the engine in astern to check that the anchor has taken hold (only when bow anchoring).
9. Note your position on the GPS. Regularly check that the boat has not moved from its position.
10. Set the echo sounder to “Anchor Watch”.

⚠ WARNING Always fix the anchor in such a way that it is securely fastened onto the boat. An anchor that falls off when under way may cause serious damage to the boat and mortal danger to the crew.

6.6.4 Towing and mooring

⚠ CAUTION

When towing another boat or being towed, always drive slowly. If the boat you are towing is of the displacement hull type, never exceed its hull speed.

- Always attach the tow line so that it can be detached under load. It is the owner’s and users' responsibility to ensure that the mooring lines, towing lines, anchor chains, anchor lines and anchors are adequate for the vessel’s intended use.
- Always remember that the stability of the boat may decrease when being towed.

7 Maintenance

7.1 Cleaning and maintaining the gelcoat surface

The gelcoat surface of the boat is subjected to environmental conditions which can, under certain circumstances, lead to deterioration of the surface. Overtime, these external factors such as saltwater, high UV exposure and temperature variation, can have an effect on the gelcoat surface.

Generally, gelcoat should last 3 years without showing any significant signs of yellowing, chalking, or other deterioration in typical conditions.

NOTICE

Clean and maintain regularly all the gelcoat surfaces on the boat.

If the regular cleaning and maintenance is neglected, or if the boat is exposed to certain environmental conditions where it is berthed, deterioration of the surface finish such as fading, discoloration and brittles may become visible over time.

- Wash and clean the boat after every trip, and weekly if it is stored outside uncovered.
- Wax the boat twice a year if used all year, otherwise annually.
- Inspect the gelcoat surface annually for signs of deterioration, such as brittle surfaces or changed color tones.
- Small scratches or discolorations can be fixed by buffing or polishing.
- Severe scratches, discoloration or oxidation may require wet sanding before buffing, polishing and vaxing.

  Wet sanding is recommended to be performed by your BRABUS Marine dealer or a trained professional.
- When the boat is not in use, keep the gelcoat surface out of the sun or cover the boat with a canvas tarpaulin.

  Do not use plastic or other non-porous materials, which can trap moisture between the cover and the surface.

Washing

NOTICE

Use a cleaning product specially made for boats. Do not use household cleaning products, chlorine, acids or similar as they may damage the boat surface due to their improper pH value.

Wash the boat after every trip by using a mild cleaning product. Dilute the cleaning product with fresh water according to the instructions on the product label.

1. Rinse the deck and hull with fresh water to remove loose dirt.
2. Wash the surfaces with the diluted cleaning product and a soft-bristled brush.
3. Rinse off with fresh water.

Waxing

Waxing the gelcoat surface restores gloss and protects the finish. Only use wax recommended for gelcoat, and follow the product instructions carefully.

Wax can either be applied by hand using a clean rag, or with an orbital-motion buffing machine.

NOTICE If using a buffing machine, do not exceed the speed of 1200 rpm. Using a higher speed may burn the gelcoat.

NOTICE Do not wax a gelcoat surface in direct sunlight.

1. Apply wax and wait for a few minutes until the wax looks dry.
2. Buff the wax either by hand using a clean rag, or by using a buffing machine.

   Buff in circular motions until the surface is clean and glossy.
3. Finish by wiping the potential wax residues off with a clean rag.

Polishing and buffing

Small scratches or discolorations can be fixed by polishing and buffing the boat. If the surface has severe discoloration or oxidation, wet sanding is recommended before polishing and buffing.

- Polishing compounds remove small scratches and discolorations.
- Buffing compounds contain abrasive and remove deeper scratches or oxidation.

  Buffing compounds can be used, for example, to remove scratches on the hull caused by the fenders.
- After using the buffing compound, use polishing compound to achieve the best possible finish.
- Follow the product instructions of the compound carefully.

Polishing and buffing compounds can either be applied by hand using a clean rag, or with an orbital-motion buffing machine with a polishing pad.

NOTICE When using a buffing machine, do not exceed the speed of 1200 rpm. Using a higher speed may burn the gelcoat.

NOTICE Do not polish or buff a gelcoat surface in direct sunlight.

1. Apply polishing or buffing compound on the surface and wait for a few minutes until the compound looks dry.
2. Polish or buff the compound either by hand using a clean rag, or by using a buffing machine with a polishing pad.

   Buff in circular motions until the surface is glossy.
3. Wax the surface.

Wet sanding

NOTICE Wet sanding is recommended to be performed by your BRABUS Marine dealer or a trained professional.

Severe scratches, discoloration or oxidation of the gelcoat surface may require wet sanding. Wet sanding can be done either by hand or by using a machine.

NOTICE When using a machine, do not exceed the speed of 1200 rpm.

Using a higher speed may burn the gelcoat.

NOTICE Do not wet sand a gelcoat surface in direct sunlight.

1. Spray water to the area that needs to be sanded.

   NOTICE Keep the surface continuously moist while sanding.

2. Sand the surface with a 1000 grit sandpaper (for example Mirka Abralon).

   If you use a machine, use a low rpm speed to get the best result.

   Keep sanding until the entire surface is equally matt.
3. Sand the surface with a finer 1400 grit sandpaper.
4. Sand the surface once more with an even finer-grit sandpaper.

   This saves time in the buffing and polishing stage.
5. After sanding, when the surface looks equally matt, rinse the surface with fresh water and allow to dry.
6. Buff and polish the surface to get the gloss back.
7. Wax the surface.

7.1.1 Maintenance notes

The boat requires a certain amount of maintenance. This is especially relevant for external parts which are exposed to sun and salt water.

A proper maintenance of your boat contains the following:

- Wash the boat with fresh water regularly.
- If the boat is used throughout the year, polish the hull approximately every fourth months.
- Polish the stainless and chromed parts with chrome polish.
- Clean the aluminium parts with fresh water. Add soap to the water, if necessary.
- Rinse the cover with fresh water. Allow to dry thoroughly before folding away.

- Clean and maintain teak surfaces with products that are made for that purpose.

  Over time, the teak deck takes on a satin grey appearance, if not maintained.
- Clean a composite deck with a soft brush and a mild soap solution.
- Avoid using aggressive cleaning agents.
- If the boat is stored or docked in an environment where there are noticeable hard air conditions, for example, near harbours, in lively sea routes, highways and power stations, you have to pay special attention to the RST parts of the boat.

  This kind of air conditions can cause premature corrosion to the RST parts and damage to gelcoat surfaces.
- Polish and wax RST and gelcoat parts (especially coloured gelcoat parts) approximately every fourth month so that the parts will not face fading or other visual defects.

7.2 Antifouling

Painting your boat's hull with antifouling paint is worth considering if your boat is most of the season in water.

Boats that are frequently lifted out of the water and relaunched during the boating season can be affected by antifouling oxidization. Out-of-the water, antifouling paint will oxidize, which will prevent the biocide release and slowly cause antifouling to lose its effectiveness. Follow the paint manufacturer's specifications for launching window.

Antifouling wears gradually over time, depending on factors such as the location where the boat is used and how often the boat is used. As a rule of thumb, antifouling lasts one season once applied. When the antifouling needs to be repainted, it is important to use the same antifouling paint as the existing antifoul, or to scrub off old antifouling paint down to gel coat. If different antifouling paints are used, there is a risk that the composition of the paints are incompatible, preventing the antifouling paint from working.

Contact your nearest BRABUS Marine dealer in antifouling repainting and condition inspection related matters.

7.3 Maintaining the interiors

7.3.1 Wooden interiors

The interior details of the boat, such as the locker doors and drawer fronts and wooden strips, are made of oiled wood.

- Clean the wooden interior details with a damp cloth and a small amount of soapy water.
- Treat the wooden surfaces again every year to protect the wood.

7.3.2 Plastic and painted surfaces

1. Wet the surface evenly with water before the actual cleaning.
2. Remove stains.
   - Remove regular stains with a brush and a lightly diluted cleaner.
   - Remove grease with a brush or a sponge and window cleaner.
3. Clean the surface afterwards with sponge and water.
4. Wipe dry with a piece of cloth.

7.3.3 Fabrics

The interior fabrics are washed according to separate washing instructions (marking on the fabric).

In case the marking is not visible:

1. Wash in 40°C with a light spin cycle.
2. Hang to drip dry.

The material may slightly shrink. If you want to avoid shrinking, take the fabrics to a dry cleaner.

7.3.4 Leather surfaces

The leather used in the boat is very durable and easy to clean, but requires proper handling.

The leather finish bases on a hydrophobization (the fibres are oil-cased) and is perfected by a water based polyurethan dispersion (solvent-free).

Cleaning should be done with a duster occasionally and with a moist cloth (not wet) only once in a while. Fresh stains should be absorbed with a dry cloth and wiped after with a moistened cloth until all stains are removed. If stains are already dry, clean with a lightly moisted cloth. The cleaned parts shall be left to dry naturally, and then treated with Intensity Care.

In addition, clean the leather 1-2 times a year with Intensity Care. This treatment prolongs the of the leather.

Persistent stains are removed by the Intensity Leather Cleaner. After using it, please treat the furniture with Intensity Care.

7.3.5 Doors and hatches

- Clean the tracks of sliding doors and hatches regularly and lubricate, if necessary.
- Lubricate handles and locks with regular lock lubricant.

7.4 Maintaining the cover

New covers may leak initially, as the seams need to swell.

During use

To prevent quick deterioration of the cover, secure it tightly in a folded-up position to prevent flapping.

After use

NOTICE

- Hang to dry. Never use a drying cabinet or iron to speed up drying.
- Check that the cover is completely dry before stowing. Stowing a moist cover can cause mold damage.
- Store the cover in dry indoor conditions for the winter.
- The cover must not be stored in the boat.

7.4.1 Cleaning the cover

The cover needs to be thoroughly cleaned two or three times a year.

NOTICE Never use high pressure washers or chemical cleaning agents.

1. Let the fabric cover soak for at least 24 hours.
2. After soaking, wash the inside and outside of the cover with a sponge or a soft brush.

   Use mild soapy water and plenty of water, max. 30°C.
3. Rinse thoroughly with freshwater.

   Mix 12% vinegar in the final rinsing water to neutralize the soap residues.
4. Hang the cover to drip dry.

7.5 Protecting underwater metal parts

Boat's underwater metal components, such as thru-hulls, seacocks, trim tabs, engine internal components and propellers, are subject to electrolytic corrosion. Electrolysis and galvanic corrosion (corrosion of dissimilar metals in salt water) can occur in marine environment due to external factors such as stray currents, polluted waters, or proximity of other vessels. It is important for boat owner to be aware of the phenomena, as they can cause serious deterioration over time.

Signs of electrolytic corrosion are, for example, white, powdery substance on exposed metal such as propellers or breakers, or thru-hulls and seacocks turning greenish. If the corrosion has progressed far, even deep pitting can appear on the part’s surface.

The boats are equipped with sacrificial anodes to protect the metal parts from galvanic corrosion. Additionally, boats equipped with shore power have galvanic isolators to stop low voltage currents from flowing through the boat.

All underwater metal parts need to be inspected annually for signs of corrosion. Additionally, underwater thru-hulls and seacocks are recommended to be replaced every 5 years. Please see the section ***Preventing corrosion*** for more details.

7.6 Preventing corrosion

Sacrificial anodes are installed on the boat's trim tabs and engines to protect metallic parts from corrosion damage. The anodes need to be replaced regularly as they wear out to protect other metallic parts.

- Inspect the anodes monthly.
- Replace them when approximately fifty percent of the anode has deteriorated.

In general, anodes need replacement once a year in fresh water, and more frequently in saltwater environment. If there is an increase in the consumption speed, it can be a sign of electrical issue and the root cause should be investigated.

7.7 Preventing frost damage

- The bilge pump system is fitted with a water lock on the hose.
  - Detach the hose and fully drain the water from the water lock and run the pumps dry. Otherwise the pumps may freeze and break.
- Unscrew the frost plug on the underside of the shower fittings.
  - If there is no frost plug, unscrew the shower hose.
- Drain the water tank and all other components containing water in order to avoid frost damage.
- Run the freshwater pump dry to drain out all the water.
- Make sure that no water remains in the boat under any circumstances. Leave the hatches in the cabin partially open.

7.8 Checklist: Before winter lay-up

- Wash the hull and bottom immediately after lifting the vessel out of the water.
- Wash all parts inside, also under the floorboards.
- Leave all lockers, drawers, and cabin and wardrobe doors open.
- Remove the carpets.
  - Store the carpets and cushions indoors in a dry place.
  - If this is not possible, make sure that the cushions are dry and position them on their side.
- Disconnect and service the air conditioner.
  - Switch off the power and disconnect the power supply.
  - Close the seacocks.
  - Drain the cooling water circuits and pumps, or fill them with antifreeze.
  - Check the more detailed instruction in the manufacturer's manual.
- Disconnect and service the fridge.
  - Switch off the power and disconnect the power supply.
  - Defrost the fridge.
  - Clean and dry the exterior and the interior of the fridge.

  - Empty and dry the condensate water tray.
  - Leave the door slightly ajar to enable ventilation.
  - Check the more detailed instruction in the manufacturer's manual.
- Ensure good ventilation in the boat.
- Make sure that the rubber O-ring between the fuel tank inlet and the fuel tank cap is intact. Otherwise there is risk of water getting inside the fuel tank.

NOTICE If the batteries are left aboard, make sure they are fully charged, otherwise the batteries can freeze and crack.

7.9 Checklist: Before launching

1. Remove the tarpaulin in good time before launching.
2. Wash the hull with a regular shampoo and a soft brush.
3. Wax the hull, if necessary.

   Use a standard boat wax.
4. If there are small scratches on the hull or if some of the surface gelcoat has lost its shine, use a rubbing compound on these areas before polishing.
5. Paint the bottom with antifouling paint.
6. If the batteries have been removed, put them back and check the electrolyte level in the cells.

   Check the condition of the batteries.
7. Check all cables, clamps, engine mountings and other fastenings.
8. Check the steering before launching.
9. Check the instrumentation.
10. Close all water drain plugs.
11. Check that the seacocks are tight and in order, check for any frost damage.
12. Check all pipes, hoses and cocks.
13. Make a note of any frost damage.

7.10 Corrective maintenance

7.10.1 Deposits

Mild detergents and fine rubbing compounds reduce the weathering and calcium deposits accumulated on the surfaces.

NOTICE Do not apply the rubbing compound in direct sunlight.

- Use only a fine grit compound, and follow the label instructions carefully.
- For the best result, wax the surface after treating it with the rubbing compound.

7.10.2 Scratches and nicks

Most scratches and nicks can be removed by using a rubbing compound followed by waxing.

7.10.3 Stains

Most stains can be removed by washing with a mild detergent.

- For stubborn stains, use a tine abrasive household cleanser followed by waxing to restore original luster.
- For non-water-soluble stains, such as grease, oil, and rubber heel marks, use a solvent such as acetone, rubbing alcohol, toluene or xylene, followed by a mild detergent.
    - If these solvents are not effective, try a rubbing compound or fine sanding followed by waxing.

7.10.4 Deep marks, gouges and holes

Deep marks, gouges and holes should be repaired professionally.

Gelcoats can be well repaired by professionals, and in most cases the repair will be undetectable.

NOTICE

In cases where the damage has pierced the gelcoat layer, further exposure to water or chemicals should be avoided.

Failure to observe this precaution may result in extensive and potentially costly damage to the underlying laminate structure.

8 Environment

When handling environmentally hazardous substances such as fuel, oils, solvents, grease, bottom coats, you need to consider the following:

- Always read the instructions for each product carefully and handle the product with care.
  - Make sure that the used packaging, cans and similar items are discarded in designated collection points.
  - If you are in any doubt whether the product is hazardous or not, contact the supplier or vendor of the product.
- The backwash from boats wears down the shoreline and creates problems for other boats near you.
  - Always adjust your speed to the situation and the surroundings to avoid unnecessary backwash.
- Always drive the boat at the most economical engine revs possible, taking the prevailing conditions into account, to avoid unnecessary emissions and noise.
- Make sure that the engine is properly serviced at regular intervals so that noise and emission levels are minimized.
  - Read the engine manufacturer's manual carefully.
- As a boat owner you must be aware of the local environmental laws, and respect codes of good practice.
  - Never empty the septic or blackwater tank into water.
  - Familiarize yourself with the international regulations on the prevention of marine pollution (MARPOL) and comply with these regulations.
- Always investigate the source of any oil leaks as soon as possible.
- Dispose of recovered spilt oil correctly.
- Keep oil-absorbing cloths or rolls on board.
- Never dispose of overboard any oil, paint or other chemical that is potentially harmful to the environment. Sanctions are in place in most parts of the world for those who disregard this rule!

⚠ WARNING Any oil must be treated as chemical waste.

8.1 Requirements for North America

The EPA standards state that in freshwater lakes, freshwater reservoirs or other freshwater impoundments whose inlets or outlets are such as to prevent the ingress or egress by vessel traffic subject to this regulation, or in rivers not capable of navigation by interstate vessel traffic subject to this regulation, marine sanitation devices certified by the U.S. Coast Guard installed on all vessels shall be designed and operated to prevent the overboard discharge of sewage, treated or untreated, or of any waste derived from sewage.

The EPA standards further state that this shall not be construed to prohibit the carriage of Coast Guard-certified flow-through treatment devices which have been secured so as to prevent such discharges. They also state that waters where a Coast Guard-certified marine sanitation device permitting discharge is allowed include coastal waters and estuaries, the Great Lakes and interconnected waterways,

freshwater lakes and impoundments accessible through locks, and other flowing waters that are navigable interstate by vessels subject to this regulation (40 CFR 140.3).

9 Appendix I: Checklists

9.1 Checklist: Fire in the engine

- Stop the engine.
- Steer the boat up against the wind, if possible.
- Make sure all passengers have life jackets.
- If necessary:
  - Evacuate the passengers.
  - Call for sea rescue.
- Shut off fuel, LPG and main power switches.
- Extinguish the fire.
- Wait until fully certain that the fire has been extinguished before opening the engine cover.

  Carefully open the engine cover and be prepared to use the handheld fire extinguisher if necessary for post-fire extinguishing.
- Put out possible smoldering fires with water.

9.2 Checklist: After fire

- Open doors and windows for better ventilation.
- Inspect the boat and its equipment, and repair any damages.
- Contact local authorities, if needed.
- Make sure that the fire extinguishing equipment is refilled or replaced after use.

9.3 Checklist: After grounding

If the boat hits a rock, the damage may be easily visible or hidden.

- Make sure that everyone on board is wearing a life jacket.
- Check that everyone on board is up on the deck.
- If necessary, make an emergency call or use a distress signaling device.
- Immediately after a capsize, check the bilge for leaks. Even if the bilge pump is not rated for leaks, you may try to empty the boat using it.
- Stop the engines and lift them out of the water.
- Turn off all the main electrical switches.
- If you can detach the boat after a rock slide, check the condition of the engine.
- Inspect the boat for leaks.
- To avoid further damage to the engine, do not drive the boat if, for example, you notice an oil leak or the engine blade is damaged.

- If the leak is small, the boat is detached and at least one of the engines is functioning, drive to the nearest shore to prevent the boat from sinking.
- If a life raft is available and required, prepare it for use.
- If you detect a leak, close all doors and hatches. Open doors and hatches may cause the boat to drown more quickly.
- Do not go inside of the boat if it has a leak.
- Call for towing assistance from local authorities or other agencies.
- A professional should inspect the boat after grounding. Even if there is no visible leak, the hull may be damaged and in need of repair.

⚠ WARNING A big leak may cause the boat to sink quickly. Do not go or stay in and wear a life jacket.

9.4 Checklist: Regular inspection before leaving harbor

Safety

Make sure that:

- All the people onboard have life jackets.
- The wind and wave conditions do not exceed the design category of the boat.
- The emergency stop lanyard is attached to driver.
- There is a fire extinguisher (or several) onboard and their approval/inspection date has not expired.
- The needed ropes and anchor are onboard.

Draining and tightness

Check that:

- There is no water in the bilge.
- All the bilge pumps are functional.
- The bilge has no signs of fuel or oil leaks.
- The deck drain system is clean and the valves are open.
- All deck hatches are tightly closed.

Electrical and engine

Check that:

- All the fuses are intact.
- The main switches are switched on.
- The batteries have enough power.
- The engine works properly.
- The engine cooling water flows as expected.
- The fuel level is sufficient.

⚠ WARNING The specified tank capacity is not necessarily fully available, depending on the trim and load on board. The tank must always be kept at least 20% full.

9.5 Checklist: After using the boat

Make sure that:

- The main switches are switched off.
- The septic tank discharge valve is closed.
- There is no water in the bilge.
- The bilge pumps are functional.
- The deck draining works properly and all the draining valves are open.
- All deck hatches, roof canvas and doors are tightly closed.

9.6 Checklist: Boat handling before leaving harbor

For safe navigation under all weather conditions, proper sound signaling equipment in compliance with regulations (COLREG, 1972) must be carried on board. Make sure that the sound signaling equipment on the boat is compliant with these regulations.

⚠ CAUTION According to national regulations in some countries, it is a legal requirement to wear a life vest at all times.

- Check that the boat and its equipment are in seaworthy condition.
- Always listen to long-term weather forecasts when planning longer trips.
- Always make sure there is enough fuel and freshwater in the tanks.
- Check that all items on board are properly stowed and adequately secured to manage rough sea and wind conditions.
- Make sure that the swim ladder is raised out of the water before moving off.
- Make sure that the steering is correctly positioned before starting.
- All persons on board must wear an appropriate life vest when on deck.

9.7 Checklist: Before anchoring

1. Check the chart to see if anchoring is permitted in the area.
2. Listen to the weather forecast for the area and take note of the expected wind conditions.
3. Switch on the echo sounder.
4. Study the seabed conditions and make sure that there is good holding ground.
5. Check that the safety chain has been released from the anchor.
6. Wait until you have reached the intended anchoring point before lowering the anchor.
7. Let out the anchor line equal to at least three times the depth of the water.

8. Put the engine in astern to check that the anchor has taken hold (only when bow anchoring).
9. Note your position on the GPS. Regularly check that the boat has not moved from its position.
10. Set the echo sounder to “Anchor Watch”.

⚠ WARNING Always fix the anchor in such a way that it is securely fastened onto the boat. An anchor that falls off when under way may cause serious damage to the boat and mortal danger to the crew.

9.8 Checklist: Before winter lay-up

- Wash the hull and bottom immediately after lifting the vessel out of the water.
- Wash all parts inside, also under the floorboards.
- Leave all lockers, drawers, and cabin and wardrobe doors open.
- Remove the carpets.
  - Store the carpets and cushions indoors in a dry place.
  - If this is not possible, make sure that the cushions are dry and position them on their side.
- Disconnect and service the air conditioner.
  - Switch off the power and disconnect the power supply.
  - Close the seacocks.
  - Drain the cooling water circuits and pumps, or fill them with antifreeze.
  - Check the more detailed instruction in the manufacturer's manual.
- Disconnect and service the fridge.
  - Switch off the power and disconnect the power supply.
  - Defrost the fridge.
  - Clean and dry the exterior and the interior of the fridge.
  - Empty and dry the condensate water tray.
  - Leave the door slightly ajar to enable ventilation.
  - Check the more detailed instruction in the manufacturer's manual.
- Ensure good ventilation in the boat.
- Make sure that the rubber O-ring between the fuel tank inlet and the fuel tank cap is intact. Otherwise there is risk of water getting inside the fuel tank.

NOTICE If the batteries are left aboard, make sure they are fully charged, otherwise the batteries can freeze and crack.

9.9 Checklist: Before launching

1. Remove the tarpaulin in good time before launching.
2. Wash the hull with a regular shampoo and a soft brush.

3. Wax the hull, if necessary.

   Use a standard boat wax.
4. If there are small scratches on the hull or if some of the surface gelcoat has lost its shine, use a rubbing compound on these areas before polishing.
5. Paint the bottom with antifouling paint.
6. If the batteries have been removed, put them back and check the electrolyte level in the cells.

   Check the condition of the batteries.
7. Check all cables, clamps, engine mountings and other fastenings.
8. Check the steering before launching.
9. Check the instrumentation.
10. Close all water drain plugs.
11. Check that the seacocks are tight and in order, check for any frost damage.
12. Check all pipes, hoses and cocks.
13. Make a note of any frost damage.

9.10 Maintenance log

Regular maintenance tasks are presented in the following table. If you feel confident enough, you can perform all these tasks yourself. If not, please contact your local Axopar dealer for help.

Depending on vessel model and components, every task might not be relevant.

MAINTENANCE LOG	Frequency				
Task to be performed	Every trip	Every month	Every 3 months	Every 6 months	Annually
Bilge system - Remove, clean and inspect bilge pump, check valve and its surroundings for damage or debris that may reduce the performance of the pump	●				
Waste system - Replace the no-smell carbon filters					●
Waste system - Run the macerator pump					●
Heating system - Run the heater for 10 minutes		●			
Air conditioning system - Clean air filter, seawater strainer and check the system for leaks		●			
Water system - Clean inline filter			●		
Inspect Zinc anodes - Replace all zinc anodes if 50 % has been eaten up				●	
Fire extinguisher inspection					●
CO alarm - Push test button for 1 sec			●		
Smoke alarm - Push test button for 3 sec			●		
Seacocks - Turn handle Open and Close					●
Batteries - Charge state, terminals securely attached and free from corrosion					●
LPG system - Check condition of LPG lines, connectors and LPG shut off valve					●
Fuel system - Check condition of fuel lines, connectors and fuel shutoff valves					●
Inspect fuel tank compartment bilge for water				●	
Livewell pump - Check condition of hoses and connectors			●		
Gelcoat waxing				●	
Clean hull & deck from saltwater	●				
Keep bilge dry and clean	●				
Boat covers - Clean upholstery covers and sunroof cover				●	

10 Appendix II: Fuel system

FIND NO	CODE	PART LIST	LENGHT [m]	QTY
1	AX81692	FUEL TANK		1
2	AX80817	FUEL INLET		1
3	AX81635	CARBON CANISTER		1
4	AX81636	P-TRAP		1
5	AX81720	TEE-ALU		1
6	AX81632	ONE DIRECTION VALVE FI 38		1
7	AX81633	ONE DIRECTION VALVE FI 16		1
8	AX70575	CLAMP 35X50		4
9	AX70576	CLAMP 16X27		10
10	AX70440	FUEL HOSE DN38 - FUEL INLET	4,8	1
11	AX70439	FUEL HOSE DN16 - MAIN VENT	4,7	1
12	AX70439	FUEL HOSE DN16 - TEE	0,1	11
13	AX70439	FUEL HOSE DN16 - CARBON CANISTER	1,9	1
14	AX70439	FUEL HOSE DN16 - P-TRAP	0,1	1
15	AX70605	FUEL HOSE DN12 - FUEL POWER	11,6	1
16	AX70180	VENT HOSE - AFT - FI75MM		1
17	AX70180	VENT HOSE - BOW - FI75MM		1
18	AX70577	CLAMP 12X22		2

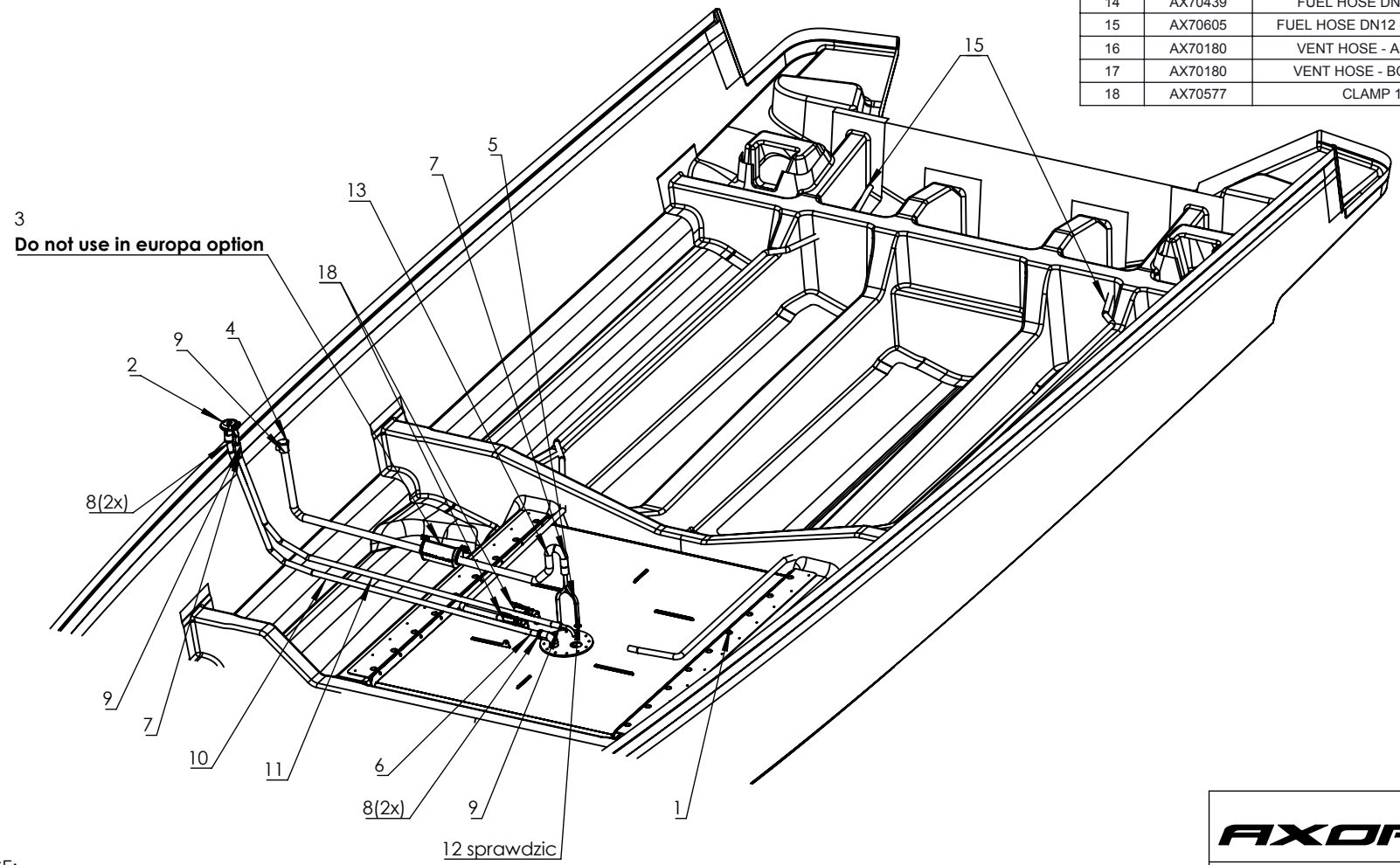

NOTICE:

1. Do NOT use Sikalfex on fuel Hoses
2. See instruction **INS006/AX37-Sh800** for **FUEL PERKO** instalation
3. See instruction "**INSTALLATION INSTRUCTIONS FOR HOSE CLAMPS**"

AXOPAR	BOAT MODEL: AXOPAR 37L			
DRAWN: Maciej Bukłaho	TITLE: FUEL SYSTEM - PERKO			
MODEL ASSEMBLY: Maciej Bukłaho				
APPROVED: PROTOTYPE	DATE: 02.07.2019	DWG NO.: SY-AX37L-01	Rev.: A	SHEET: 1 OF 1

FIND NO	CODE	PART LIST	LENGHT [m]	QTY
1	AX81692	FUEL TANK		1
2	AX80817	FUEL INLET		1
3	AX81635	CARBON CANISTER		1
4	AX81636	P-TRAP		1
5	AX81720	TEE-ALU		1
6	AX81632	ONE DIRECTION VALVE FI 38		1
7	AX81633	ONE DIRECTION VALVE FI 16		1
8	AX70575	CLAMP 35X50		4
9	AX70576	CLAMP 16X27		10
10	AX70440	FUEL HOSE DN38 - FUEL INLET	4,8	1
11	AX70439	FUEL HOSE DN16 - MAIN VENT	4,7	1
12	AX70439	FUEL HOSE DN16 - TEE	0,1	11
13	AX70439	FUEL HOSE DN16 - CARBON CANISTER	1,9	1
14	AX70439	FUEL HOSE DN16 - P-TRAP	0,1	1
15	AX70605	FUEL HOSE DN12 - FUEL POWER	11,6	1
16	AX70180	VENT HOSE - AFT - FI75MM		1
17	AX70180	VENT HOSE - BOW - FI75MM		1
18	AX70577	CLAMP 12X22		2

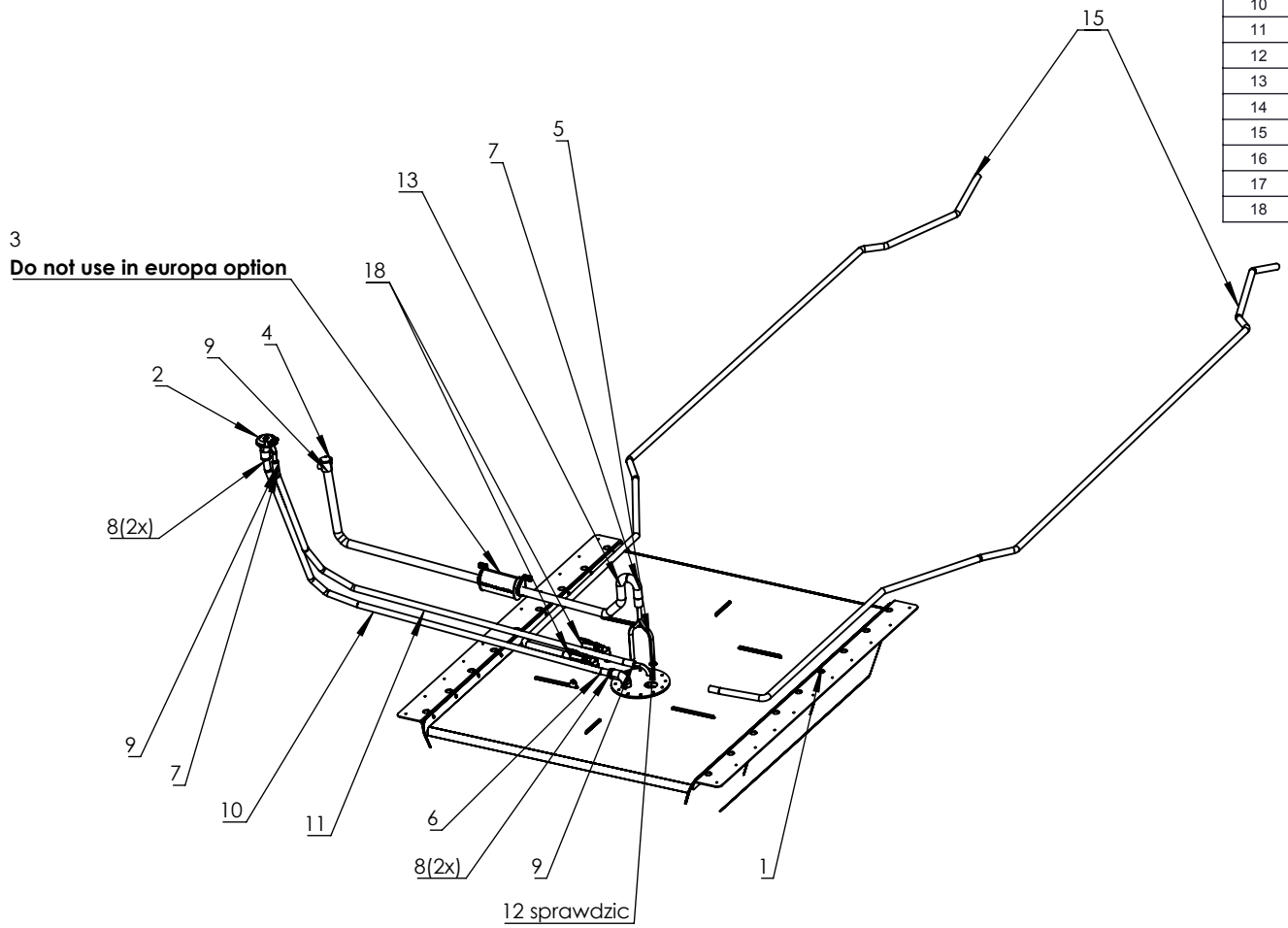

NOTICE:

1. Do NOT use Sikalfex on fuel Hoses
2. See instruction **INS006/AX37-Sh800** for **FUEL PERKO** instalation
3. See instruction "**INSTALLATION INSTRUCTIONS FOR HOSE CLAMPS**"

AXOPAR	BOAT MODEL: AXOPAR 37L		
DRAWN: Maciej Bukłaho	TITLE: FUEL SYSTEM - PERKO		
MODEL ASSEMBLY: Maciej Bukłaho			
APPROVED: PROTOTYPE	DATE: 02.07.2019	DWG NO.: SY-AX37L-01	Rev.: A / SHEET: 1 OF 1

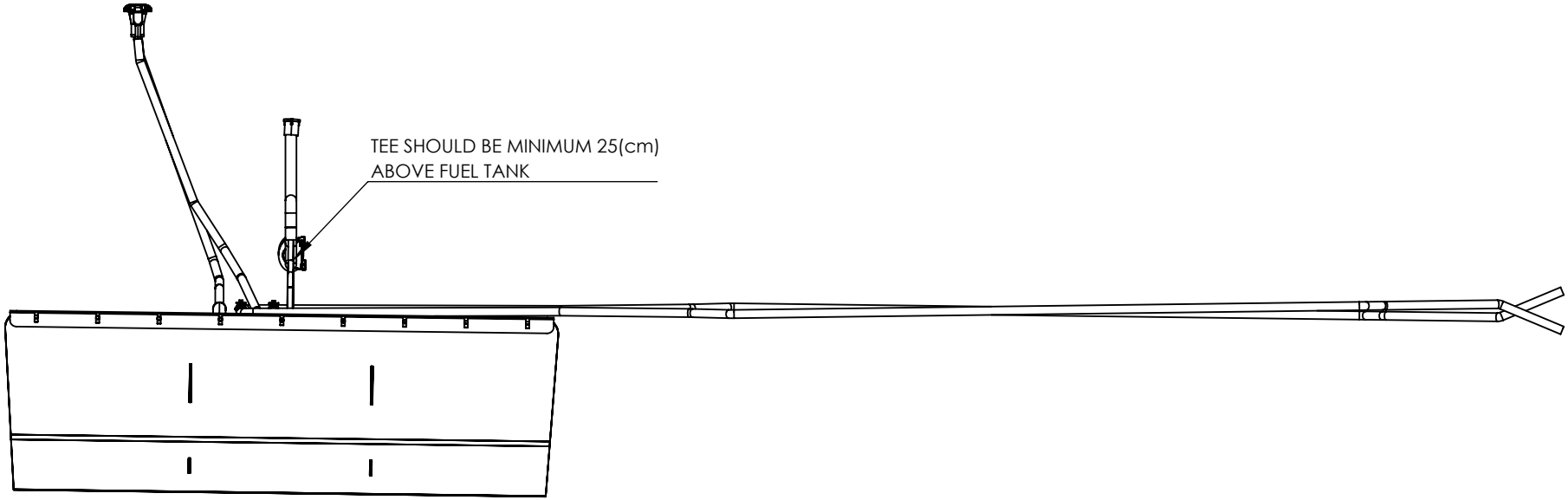

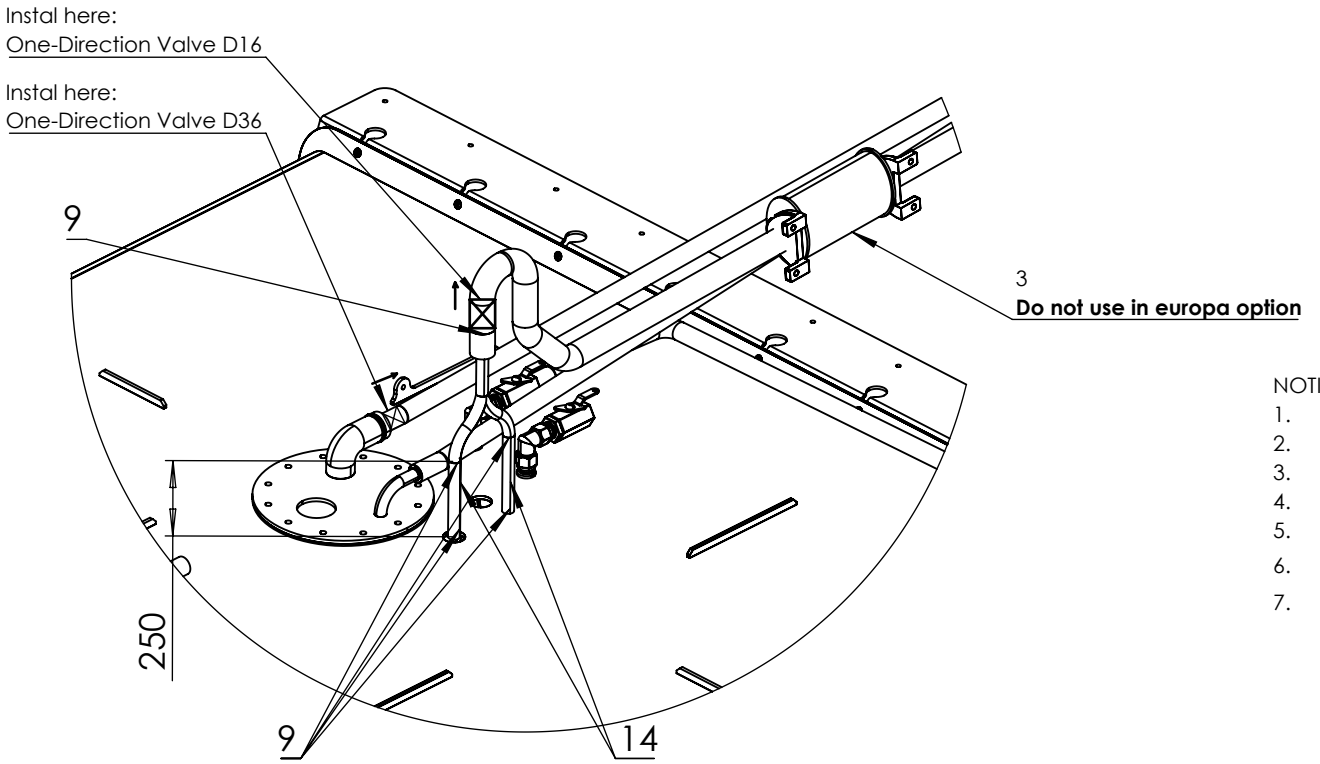

NOTICE:

1. Do NOT use Sikalfex on fuel Hoses
2. One direction Valve should be instaled in vertical position,
3. or it is allowed to have 30deg tolerance from vertical position
4. Fuel hose should have minimum 3deg drop
5. When Hose is bended its need to keep clerance
6. See instruction **INS006/AX37-Sh800** for **FUEL PERKO** instalation
7. See instruction "**INSTALLATION INSTRUCTIONS FOR HOSE CLAMPS**"

AXOPAR	BOAT MODEL: AXOPAR 37L			
DRAWN: Maciej Bukłaho	TITLE: FUEL SYSTEM - PERKO			
MODEL ASSEMBLY: Maciej Bukłaho				
APPROVED: PROTOTYPE	DATE: 02.07.2019	DWG NO.: SY-AX37L-01	Rev.: A	SHEET: 1 OF 1

11 Appendix III: Electrical diagrams

Axopar 37 MY20
Axopar 37 MY20 SHADOW

ELECTRICAL DIAGRAM / PRODUCTION DRAWINGS

DOCUMENT INCLUDES:
BOAT HARNESS / PANEL GENERAL LAYOUT
ELECTRICAL STRUCTURE OF 12V DC SYSTEM (EURO/USA)
12V DC DIAGRAM
PRODUCTION DRAWINGS

NOTE! ALL CABLE AREAS ARE IN METRIC SYSTEM (mm2).

REVISION G24

Date of modification	Modified by	Description
10.10.2023	PF	F22: 2004916; Not modified
20.2.2024	PF	G23; 2005054; Not modified
18.6.2024	PF	G24: 2005139; Not modified

Date	26.4.2019
Drawing by	TuM
Sheet rev.	24
Project rev.	G

NAVIX designed solutions
Copyright by

Axopar Boat	Sub-product code	Product code	Project ID
37 MY20 Boat model	COVER Title	HL Loc	1/ 210 Sheet

STRUCTURE OF 12Vdc SYSTEM, EURO/USA

LEGEND:
(APPLIES ONLY THIS PAGE)

-X.3 SOCKET CONNECTOR (INCLUDES PIN CONTACTS)

-X3 PLUG CONNECTOR (INCLUDES SOCKET CONTACTS)

OR — ALL PRODUCTS TIED "OR" -LABEL ARE ALTERNATIVE OPTIONS DEPENDING THE SET-UP OR MODEL OF BOAT. BOTH PRODUCTS WITH "OR" -LABEL CANNOT INSTALL TO BOAT.

NOTE! CONNECTOR NAME LIKE "X3" IS HEADER ONLY FOR EXAMPLE X3 CONNECTORS INCLUDES VARIOUS CONNECTORS:
X3a, X3b, X3c, X3d, X3e, X3f and X3g.
MORE DETAILS IN ELECTRIC SCHEMATIC AND PRODUCTION DRAWINGS.

SYSTEM GROUPS:
NOTICE!
ALL PRODUCTS INCLUDED INDICATED SYSTEM GROUP NEED TO INSTALL TO BOAT.

● BOW BATTERY SYSTEM PRODUCTS

12Vdc HARNESS STRUCTURE:

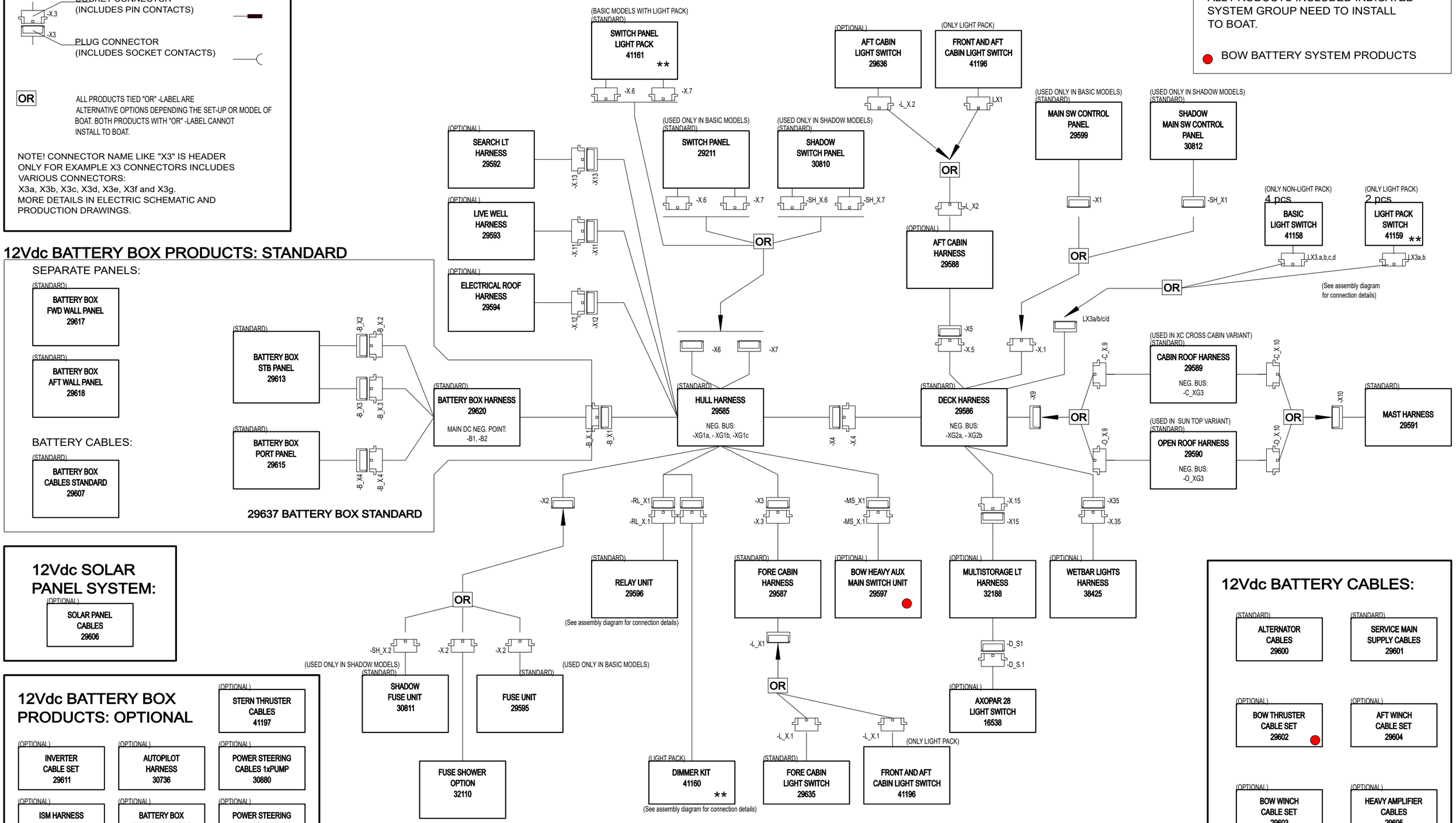

12Vdc BATTERY BOX PRODUCTS: STANDARD

SEPARATE PANELS:

BATTERY CABLES:

29637 BATTERY BOX STANDARD

12Vdc SOLAR PANEL SYSTEM:

(OPTIONAL) SOLAR PANEL CABLES 29606

12Vdc BATTERY BOX PRODUCTS: OPTIONAL

(OPTIONAL) STERN THRUSTER CABLES 41197

(OPTIONAL) INVERTER CABLE SET 29611

(OPTIONAL) AUTOPILOT HARNESS 30736

(OPTIONAL) POWER STEERING CABLES 1xPUMP 30880

(OPTIONAL) ISM HARNESS 30735

(OPTIONAL) BATTERY BOX CHARGER CABLES 30737

(OPTIONAL) POWER STEERING CABLES 2xPUMP 30881

** = must be used together, may not be mixed with standard lighting products

12Vdc BATTERY CABLES:

(STANDARD) ALTERNATOR CABLES 29600

(STANDARD) SERVICE MAIN SUPPLY CABLES 29601

(OPTIONAL) BOW THRUSTER CABLE SET 29602 ●

(OPTIONAL) AFT WINCH CABLE SET 29604

(OPTIONAL) BOW WINCH CABLE SET 29603
(ONLY WITH BOW THRUSTER CABLE SET)

(OPTIONAL) HEAVY AMPLIFIER CABLES 29605

Date of modification	Modified by	Description
10.10.2023	PF	F22: 2004916; Not modified
20.2.2024	PF	G23; 2005054; Added: 41158, 41159, 41160, 41161, 41196, 41197
18.6.2024	PF	G24: 2005139; Not modified

Date	14.1.2019
Drawing by	TuM
Sheet rev.	24
Project rev.	G

NAVIX designed solutions
Copyright by

Boat	Sub-product code	Product code	Project ID
Axopar			
Boat model: 37 MY20	Title: EL. STRUCTURE - 12Vdc SYSTEM, EURO/USA	Loc: HL	Sheet: 2 / 210

T-TOP (TT) HARNESS/ PANEL GENERAL LAYOUT

TOP VIEW

NOTE!
LAYOUT GIVES ONLY APPROXIMATE LOCATION OF PANEL AND HARNESS.

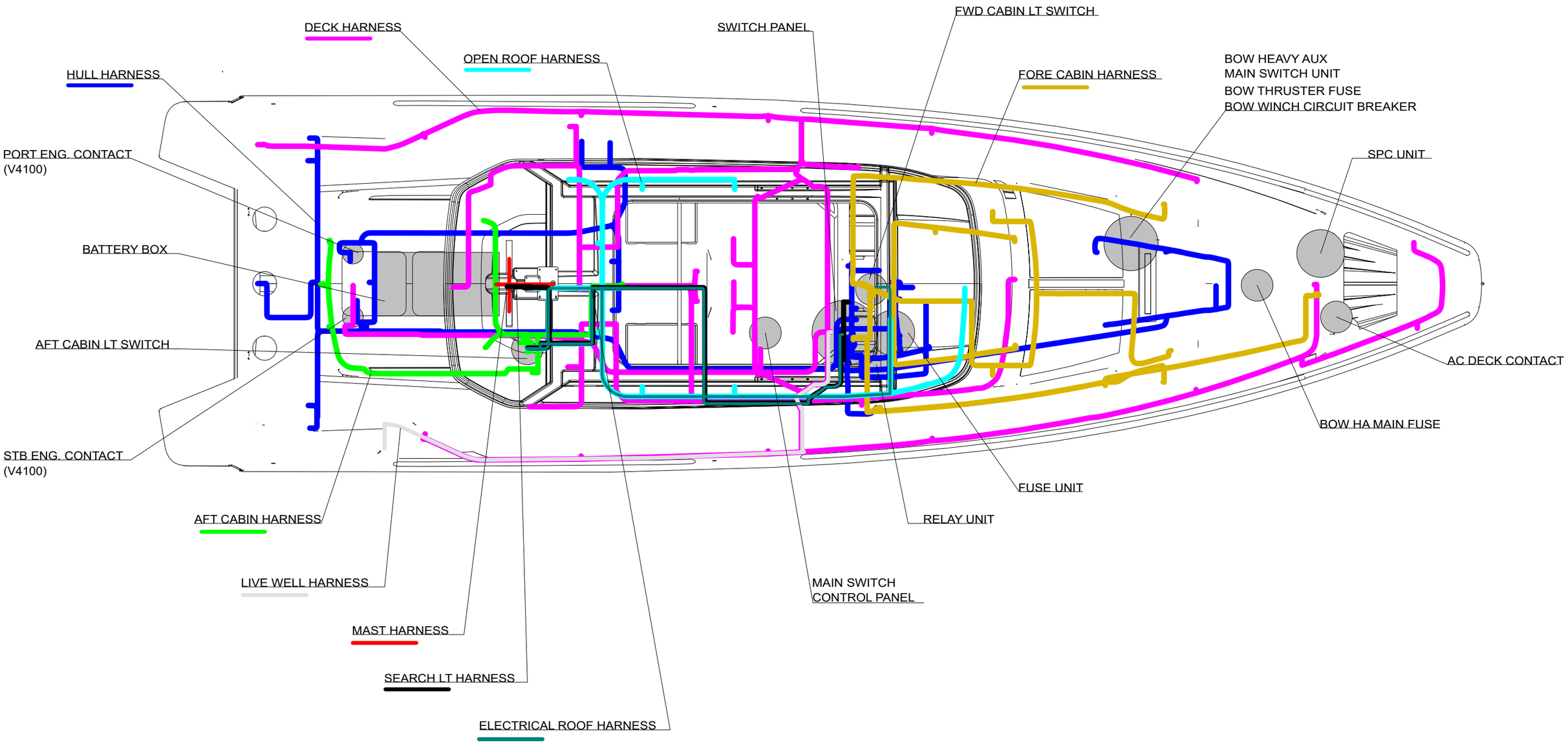

10.10.2023	PF	F22: 2004916; Not modified	Date	14.1.2019	NAVIX designed solutions	Axopar		
20.2.2024	PF	G23; 2005054; Not modified	Drawing by	TuM		Boat	Sub-product code	Product code / Project ID
18.6.2024	PF	G24: 2005139; Not modified	Sheet rev.	24		37 MY20	HARNESS LAYOUT - T-TOP (TT)	HL
Date of modification	Modified by	Description	Project rev.	G	Copyright by	Boat model	Title	Loc / Sheet 3 / 210

HULL HARNESS - LAYOUT

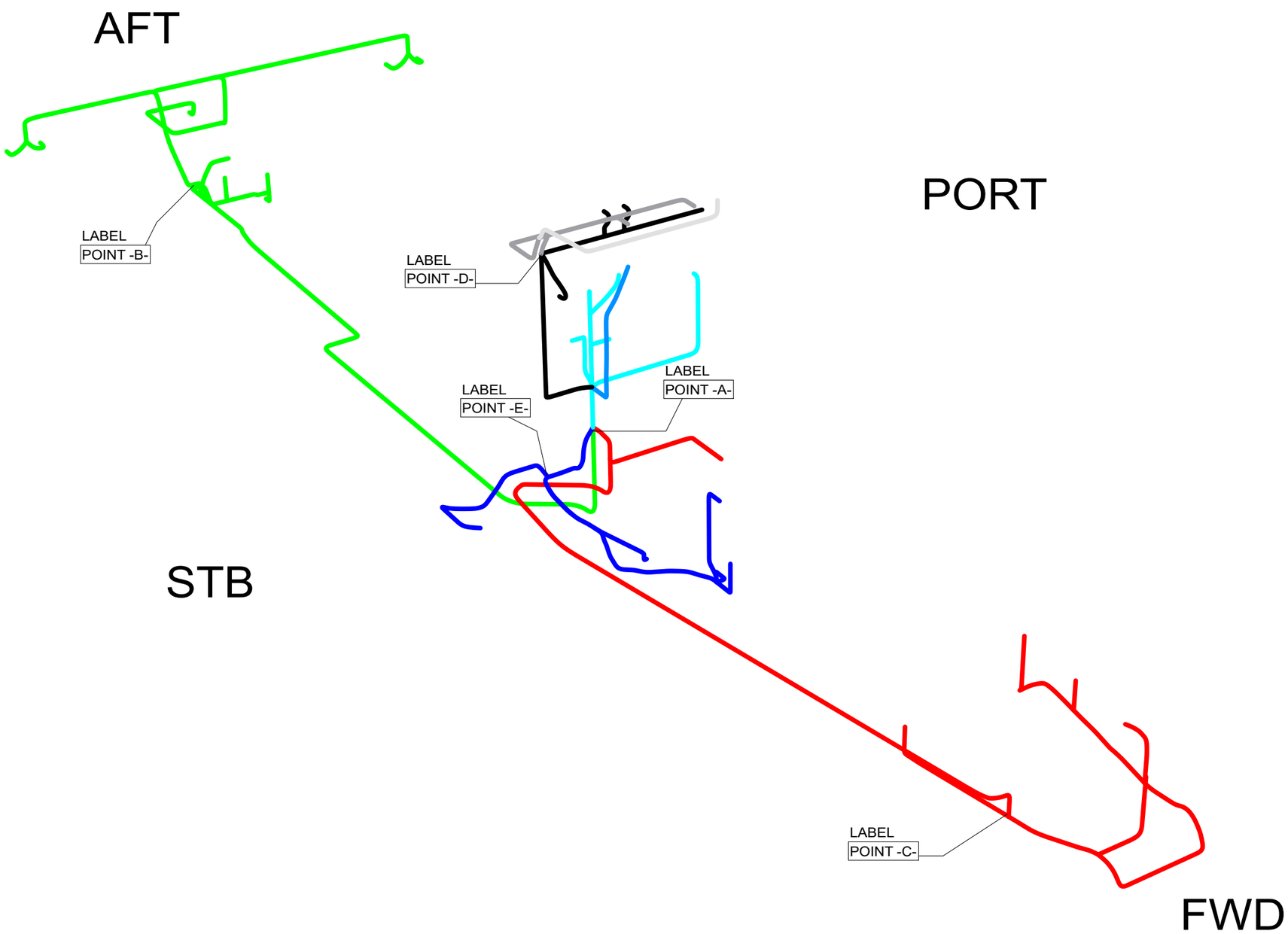

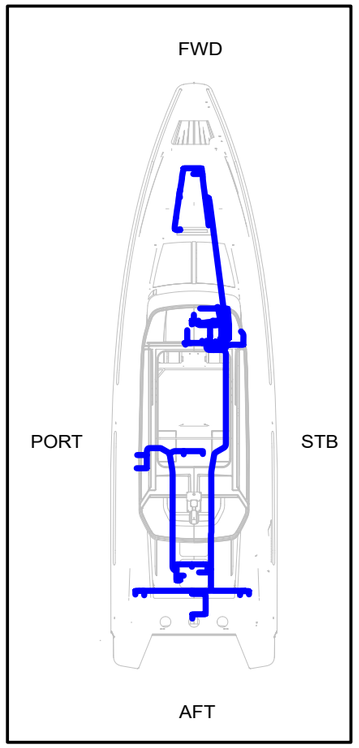

10.10.2023	PF	F22: 2004916; Not modified	Date	2.5.2019	NAVIX designed solutions	Axopar			
20.2.2024	PF	G23; 2005054; Not modified	Drawing by	TuM		Boat	Sub-product code	Product code	Project ID
18.6.2024	PF	G24: 2005139; Not modified	Sheet rev.	24		37 MY20	HULL HARNESS - LAYOUT	HL	4 / 210
Date of modification	Modified by	Description	Project rev.	G	Copyright by	Boat model	Title	Loc	Sheet

T-TOP (TT) HARNESS/ PANEL GENERAL LAYOUT

SIDE VIEW

NOTE!
LAYOUT GIVES ONLY APPROXIMATE LOCATION OF PANEL AND HARNESS.

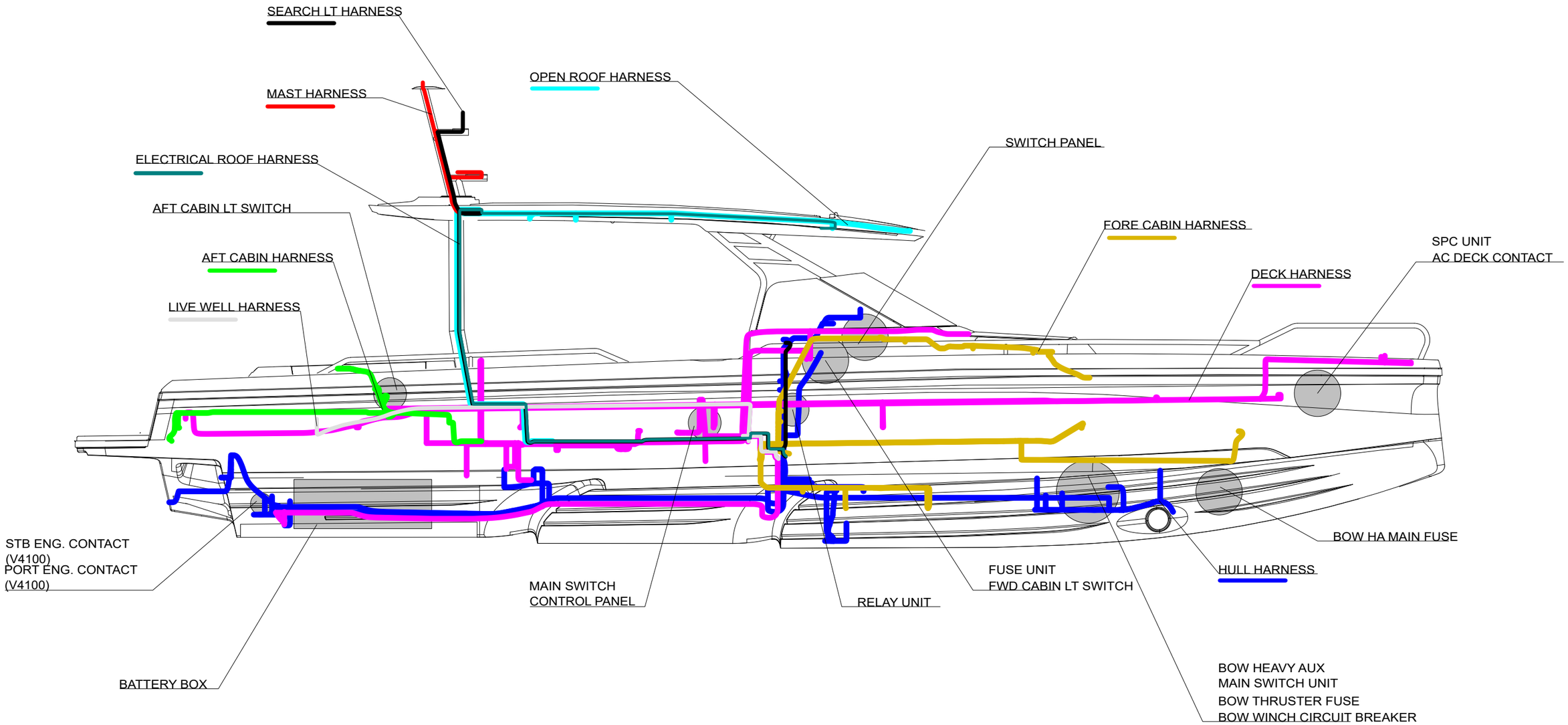

10.10.2023	PF	F22: 2004916; Not modified	Date	11.7.2019	NAVIX designed solutions	Axopar			
20.2.2024	PF	G23; 2005054; Not modified	Drawing by	TuM		Boat	Sub-product code	Product code	Project ID
18.6.2024	PF	G24: 2005139; Not modified	Sheet rev.	24		37 MY20	HARNESS LAYOUT - T-TOP (TT)	HL	5 / 210
Date of modification	Modified by	Description	Project rev.	G	Copyright by	Boat model	Title	Loc	Sheet

DECK HARNESS - LAYOUT

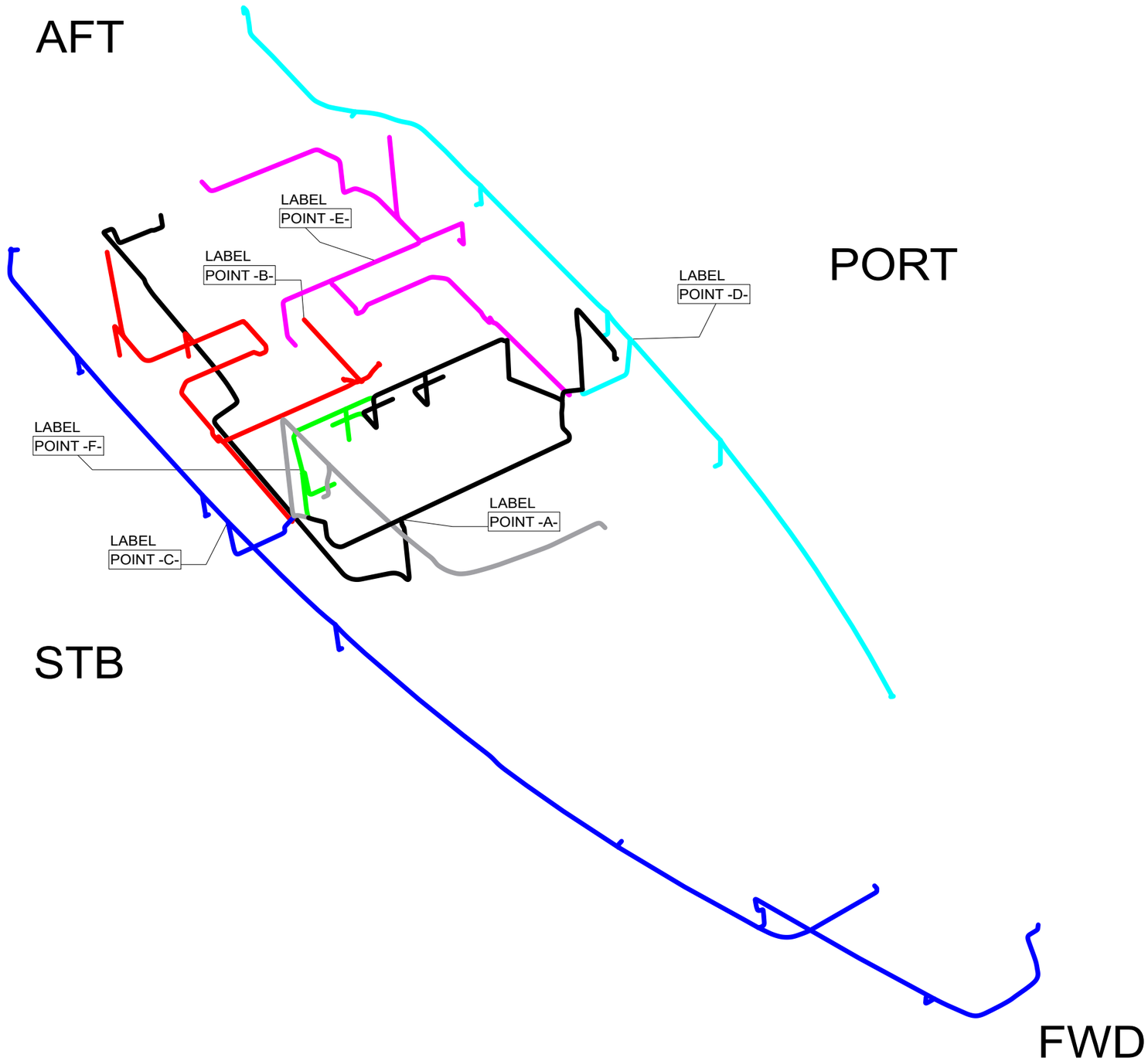

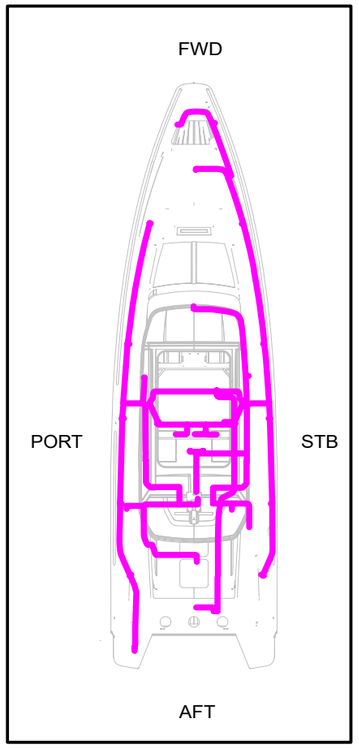

10.10.2023	PF	F22: 2004916; Not modified	Date	2.5.2019	NAVIX designed solutions	Axopar			
20.2.2024	PF	G23; 2005054; Not modified	Drawing by	TuM		Boat	Sub-product code	Product code	Project ID
18.6.2024	PF	G24: 2005139; Not modified	Sheet rev.	24		37 MY20	DECK HARNESS - LAYOUT	HL	6 / 210
Date of modification	Modified by	Description	Project rev.	G	Copyright by	Boat model	Title	Loc	Sheet

FORE CABIN HARNESS - LAYOUT

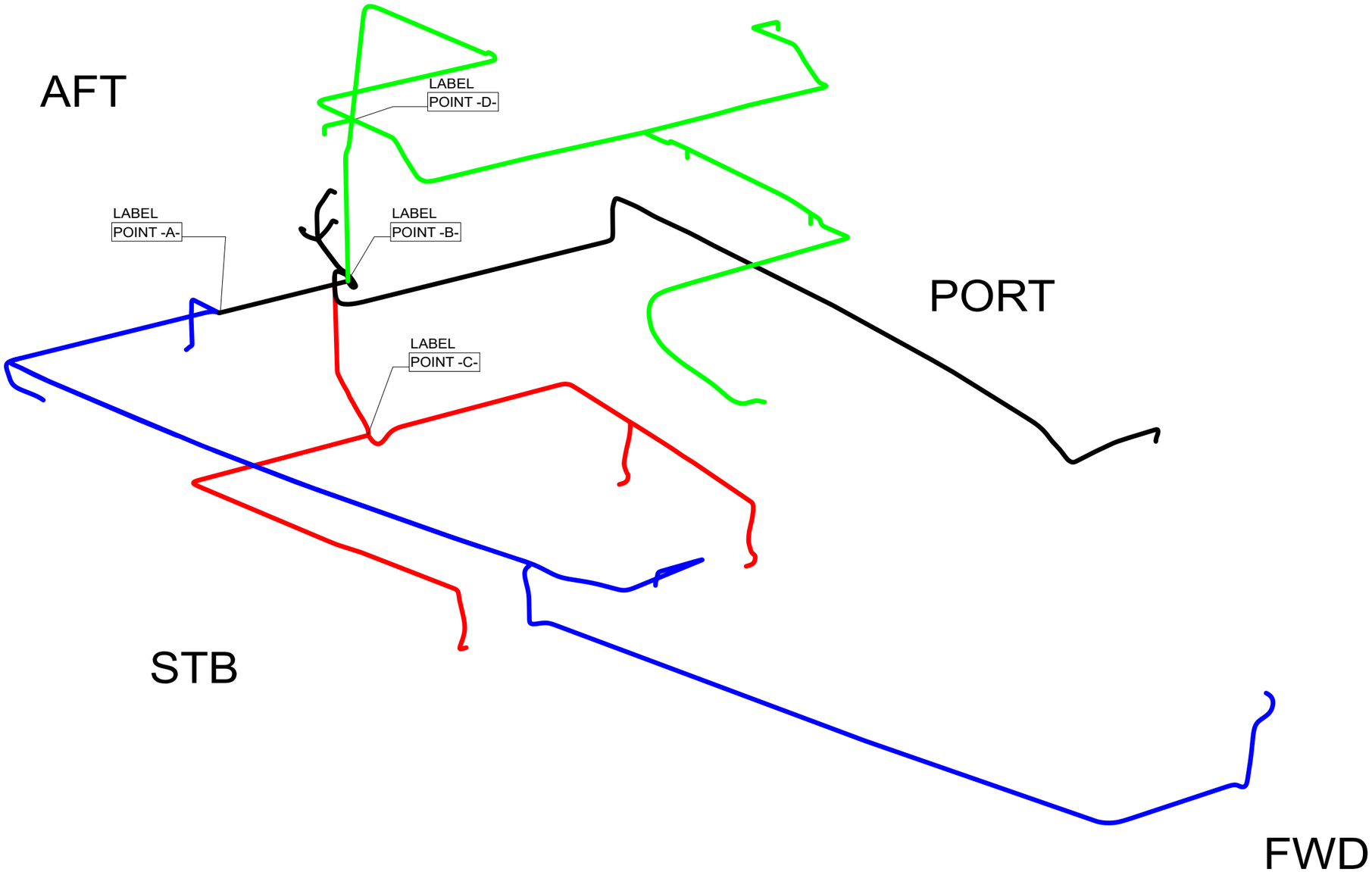

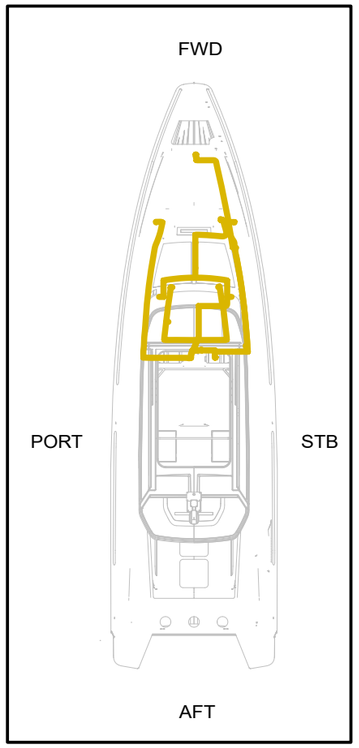

10.10.2023	PF	F22: 2004916; Not modified	Date	14.7.2019	NAVIX designed solutions	Axopar			
20.2.2024	PF	G23; 2005054; Not modified	Drawing by	TuM		Boat	Sub-product code	Product code	Project ID
18.6.2024	PF	G24: 2005139; Not modified	Sheet rev.	24		37 MY20	FORE CABIN HARNESS LAYOUT	THL	7 / 210
Date of modification	Modified by	Description	Project rev.	G	Copyright by	Boat model	Title	Loc	Sheet

AFT CABIN HARNESS - LAYOUT

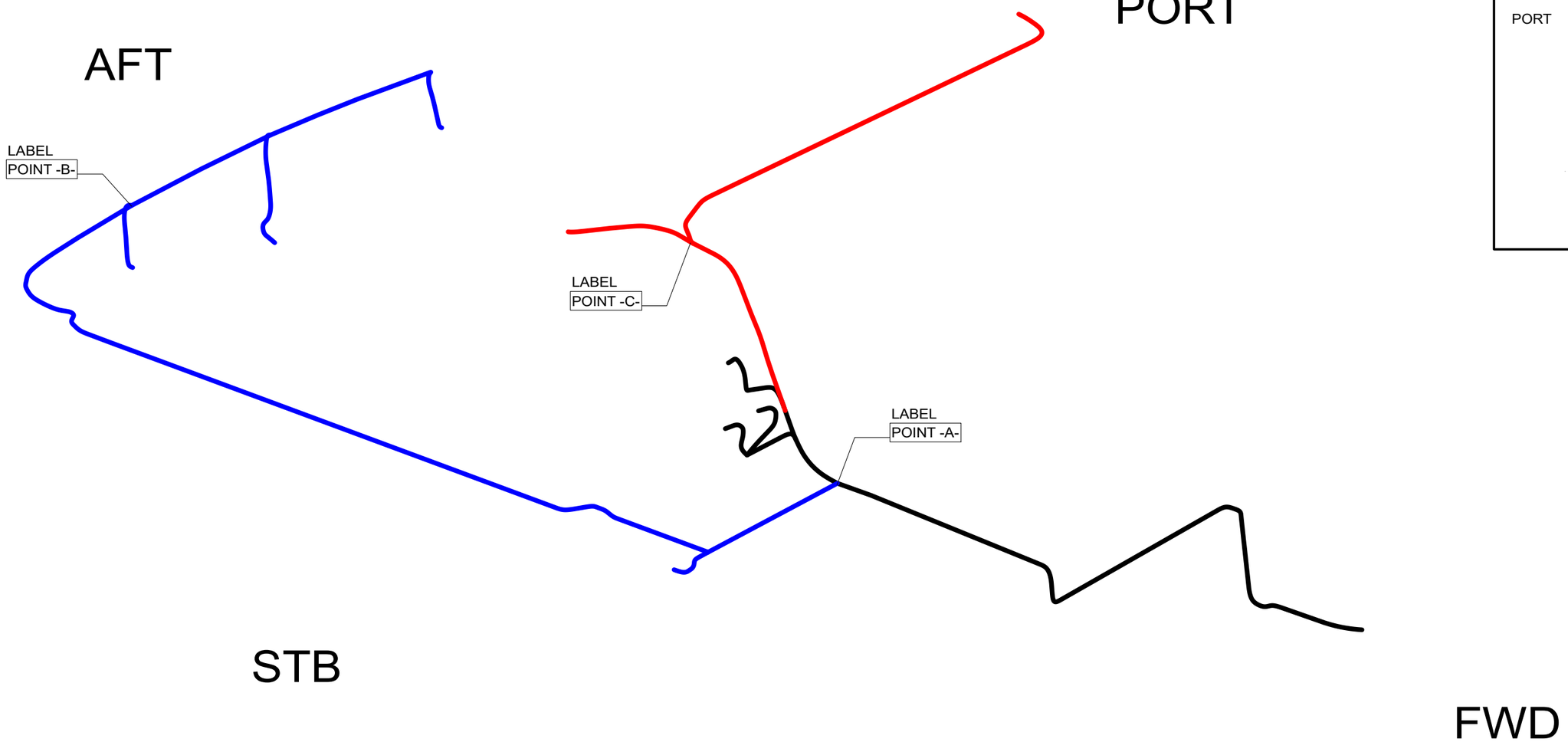

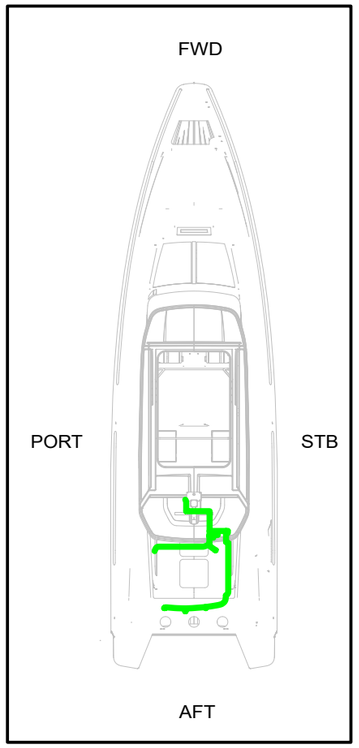

10.10.2023	PF	F22: 2004916; Not modified	Date	2.5.2019	NAVIX designed solutions	Axopar		
20.2.2024	PF	G23; 2005054; Not modified	Drawing by	TuM		Boat	Sub-product code	Product code	Project ID
18.6.2024	PF	G24: 2005139; Not modified	Sheet rev.	24		37 MY20	AFT CABIN HARNESS - LAYOUT	HL	8 / 210
Date of modification	Modified by	Description	Project rev.	G	Copyright by	Boat model	Title	Loc	Sheet

(OPEN/ CABIN) ROOF HARNESS - LAYOUT

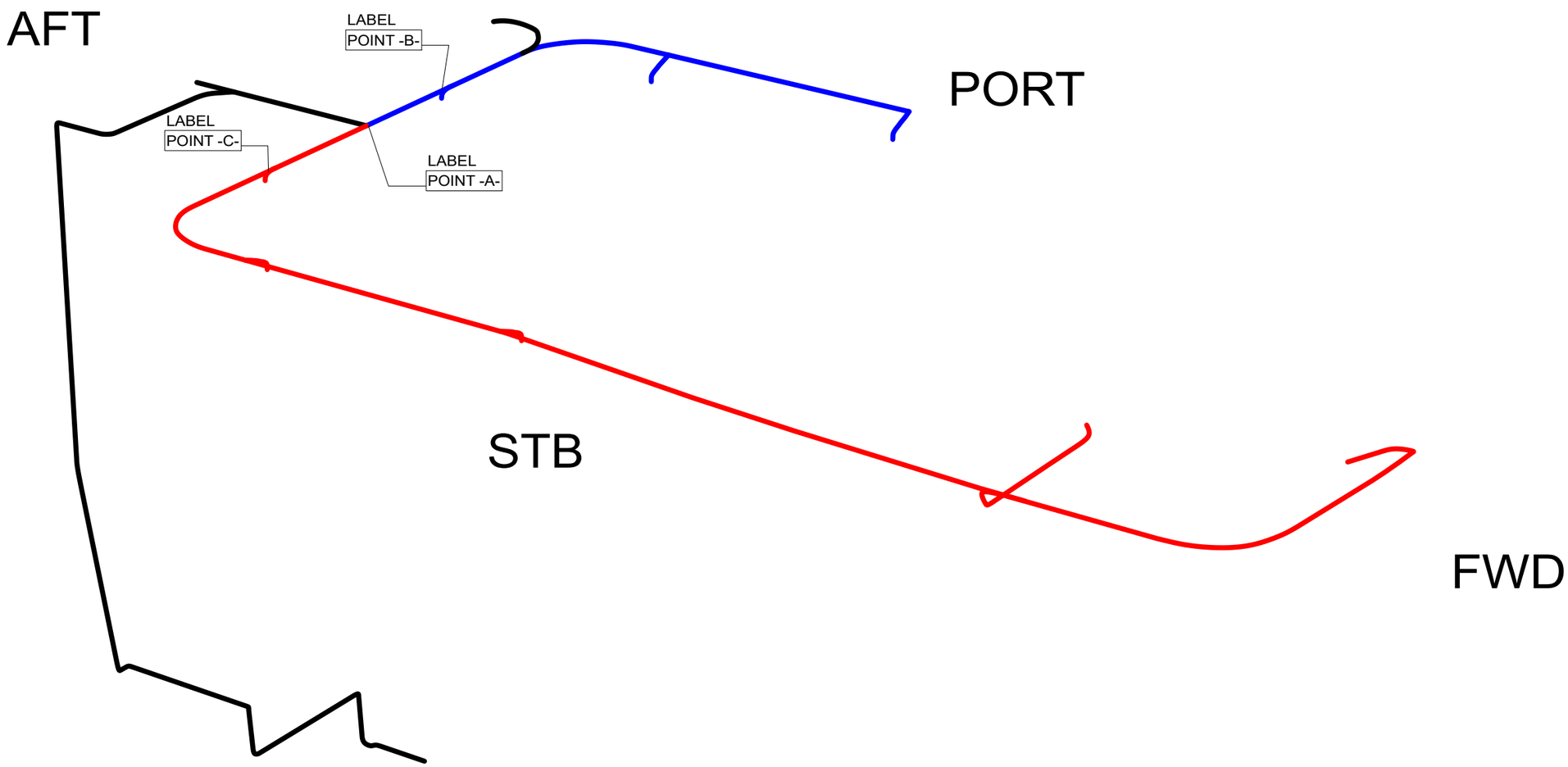

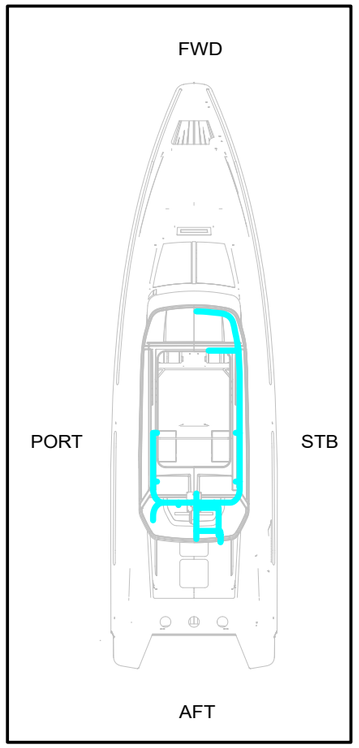

10.10.2023	PF	F22: 2004916; Not modified	Date	14.7.2019	NAVIX designed solutions	Axopar			
20.2.2024	PF	G23; 2005054; Not modified	Drawing by	TuM		Boat	Sub-product code	Product code	Project ID
18.6.2024	PF	G24: 2005139; Not modified	Sheet rev.	24		37 MY20	ROOF HARNESS - LAYOUT	HL	9 / 210
Date of modification	Modified by	Description	Project rev.	G	Copyright by	Boat model	Title	Loc	Sheet

MAST HARNESS - LAYOUT

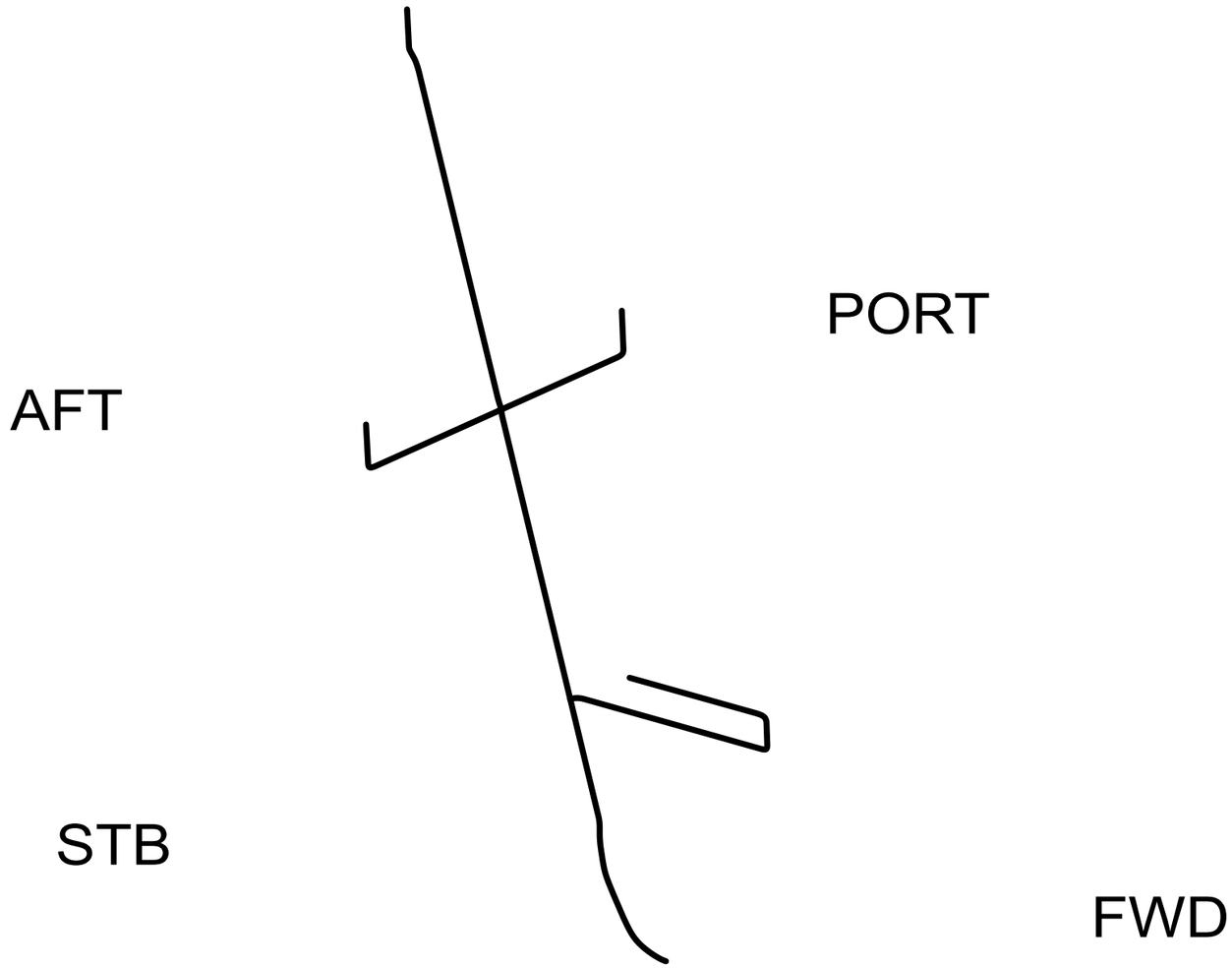

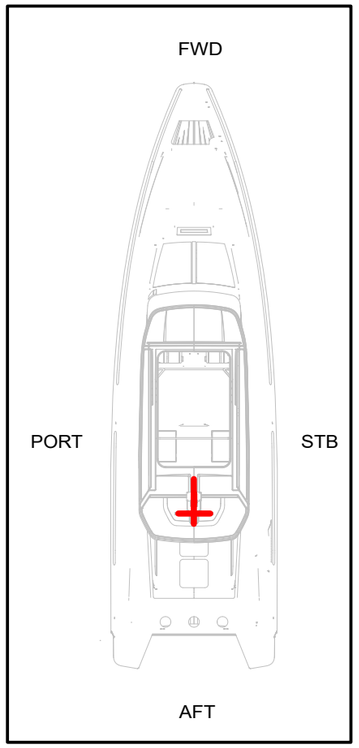

Date of modification	Modified by	Description
10.10.2023	PF	F22: 2004916; Not modified
20.2.2024	PF	G23; 2005054; Not modified
18.6.2024	PF	G24: 2005139; Not modified

Date	14.7.2019
Drawing by	TuM
Sheet rev.	24
Project rev.	G

NAVIX designed solutions

Copyright by

Boat	Sub-product code	Product code	Project ID
Axopar			
Boat model	Title	Loc	Sheet
37 MY20	MAST HARNESS - LAYOUT	HL	10 / 210

SEARCH LT HARNESS - LAYOUT

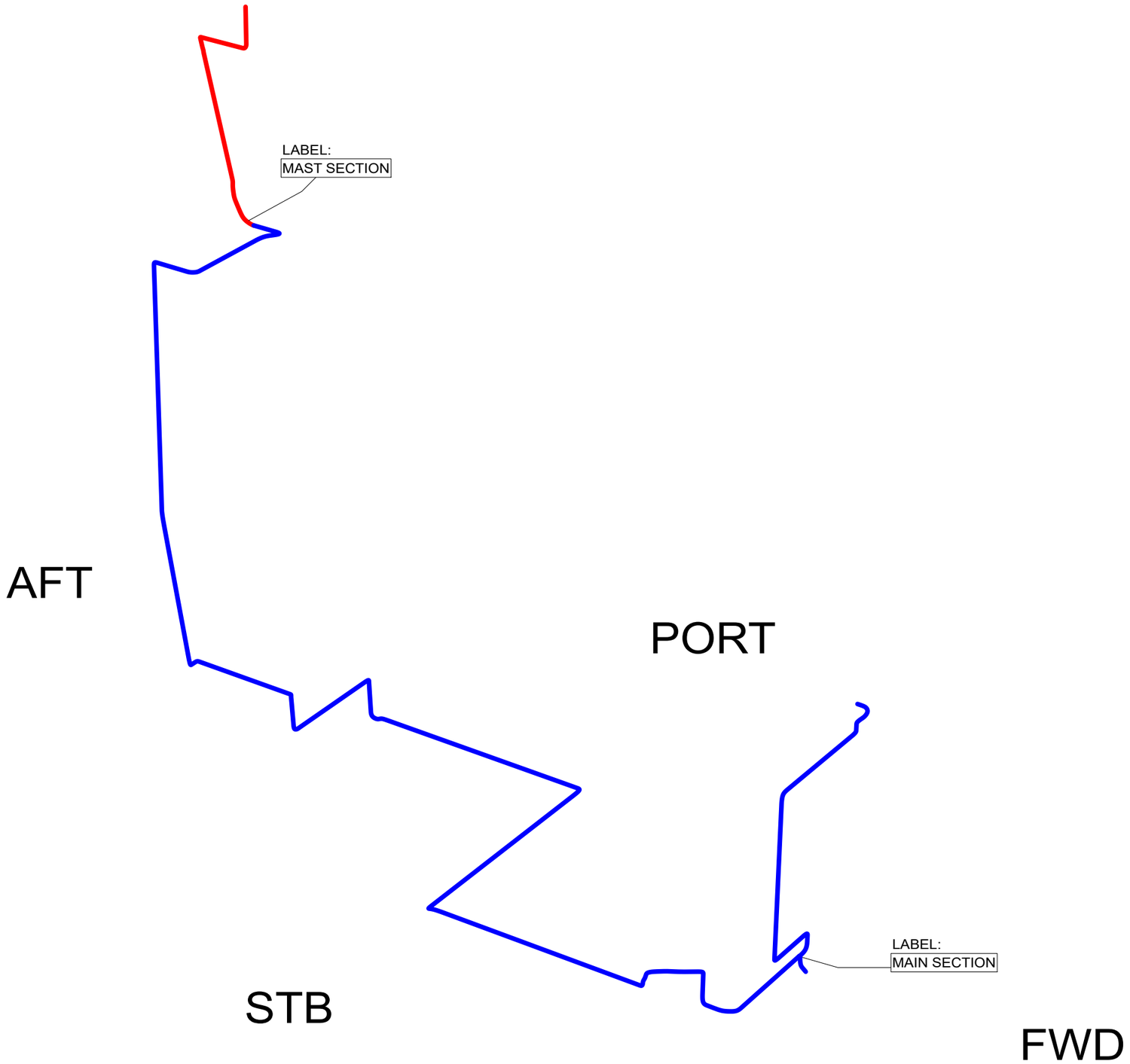

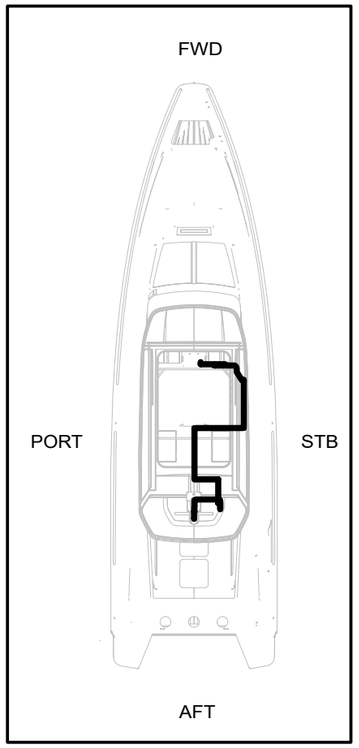

10.10.2023	PF	F22: 2004916; Not modified	Date	14.7.2019	NAVIX designed solutions	Axopar			
20.2.2024	PF	G23; 2005054; Not modified	Drawing by	TuM		Boat	Sub-product code	Product code	Project ID
18.6.2024	PF	G24: 2005139; Not modified	Sheet rev.	24		37 MY20	SEARCH LT HARNESS - LAYOUT	HL	11/ 210
Date of modification	Modified by	Description	Project rev.	G	Copyright by	Boat model	Title	Loc	Sheet

LIVE WELL HARNESS - LAYOUT

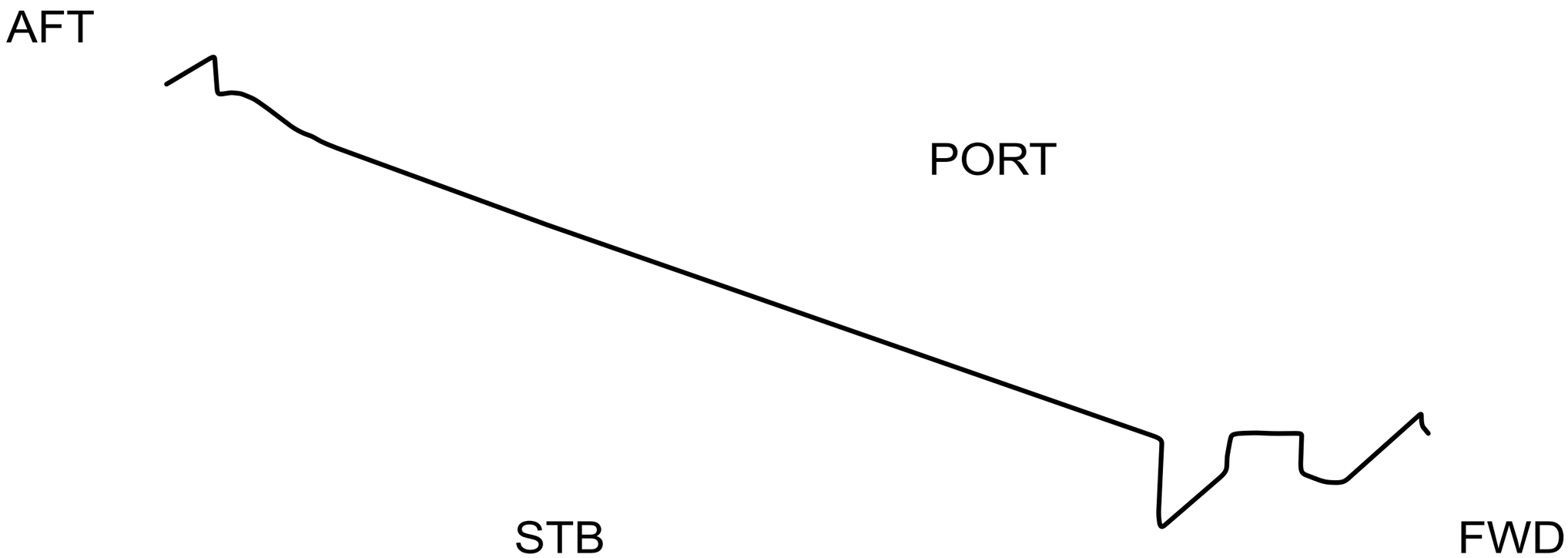

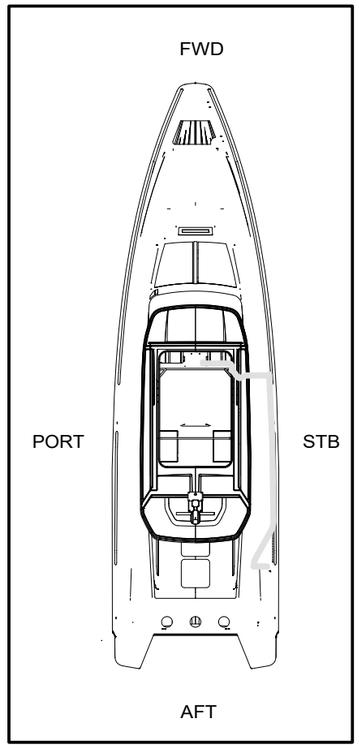

10.10.2023	PF	F22: 2004916; Not modified	Date	14.7.2019	NAVIX designed solutions	Axopar		
20.2.2024	PF	G23; 2005054; Not modified	Drawing by	TuM		Boat	Sub-product code	Product code	Project ID
18.6.2024	PF	G24: 2005139; Not modified	Sheet rev.	24		37 MY20	LIVE WELL HARNESS - LAYOUT	HL	12 / 210
Date of modification	Modified by	Description	Project rev.	G	Copyright by	Boat model	Title	Loc	Sheet

ELECTRICAL ROOF HARNESS - LAYOUT

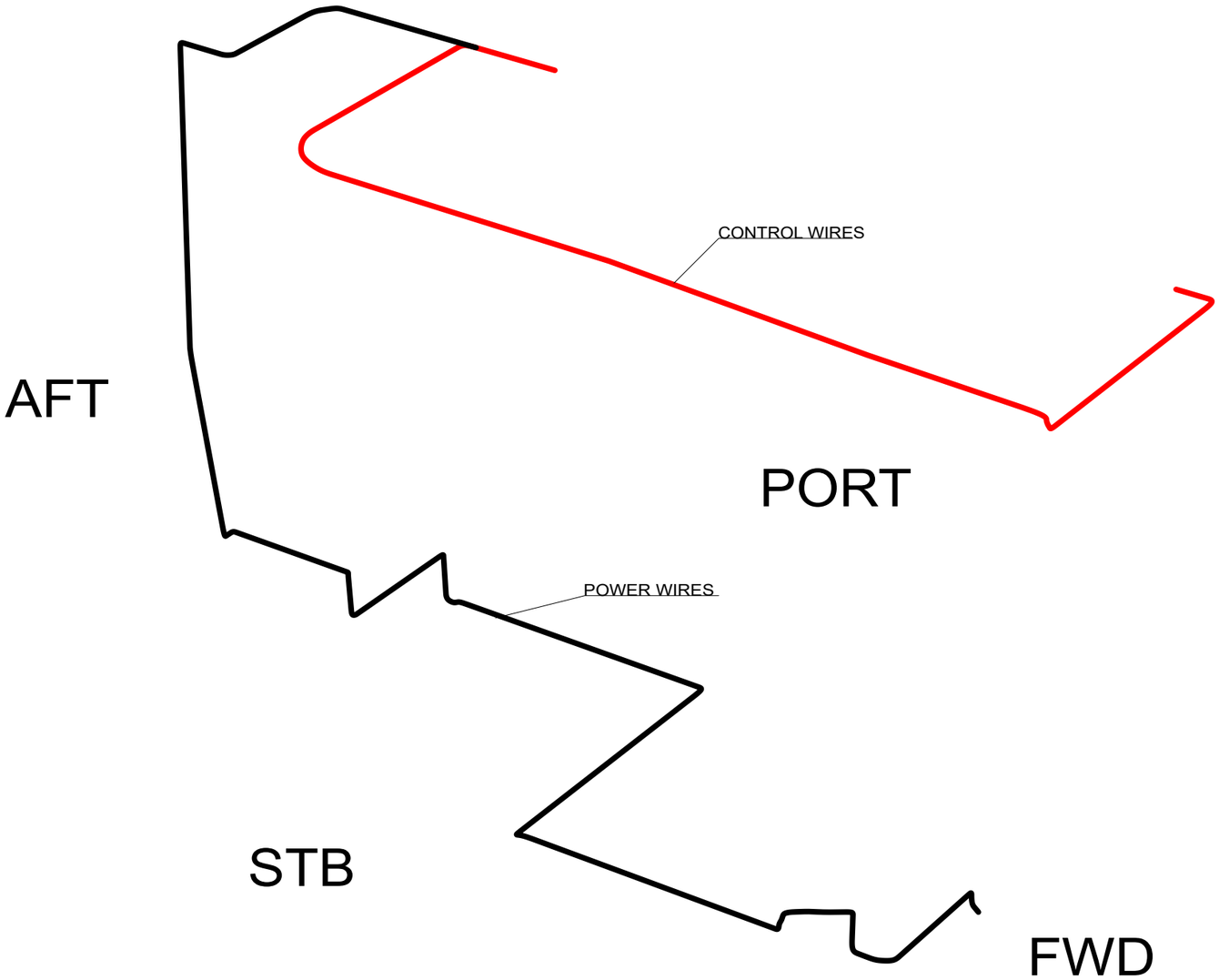

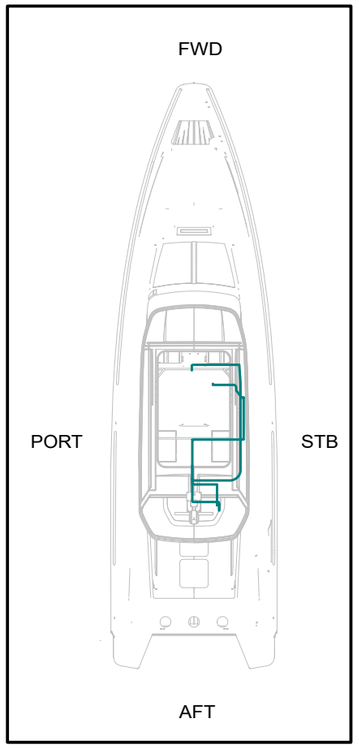

10.10.2023	PF	F22: 2004916; Not modified	Date	14.7.2019	NAVIX designed solutions	Axopar			
20.2.2024	PF	G23; 2005054; Not modified	Drawing by	TuM		Boat	Sub-product code	Product code	Project ID
18.6.2024	PF	G24: 2005139; Not modified	Sheet rev.	24		37 MY20	ELECTRICAL ROOF HARNESS - LAYOUT	HL	13 / 210
Date of modification	Modified by	Description	Project rev.	G	Copyright by	Boat model	Title	Loc	Sheet

BATTERY BOX PANEL LAYOUT

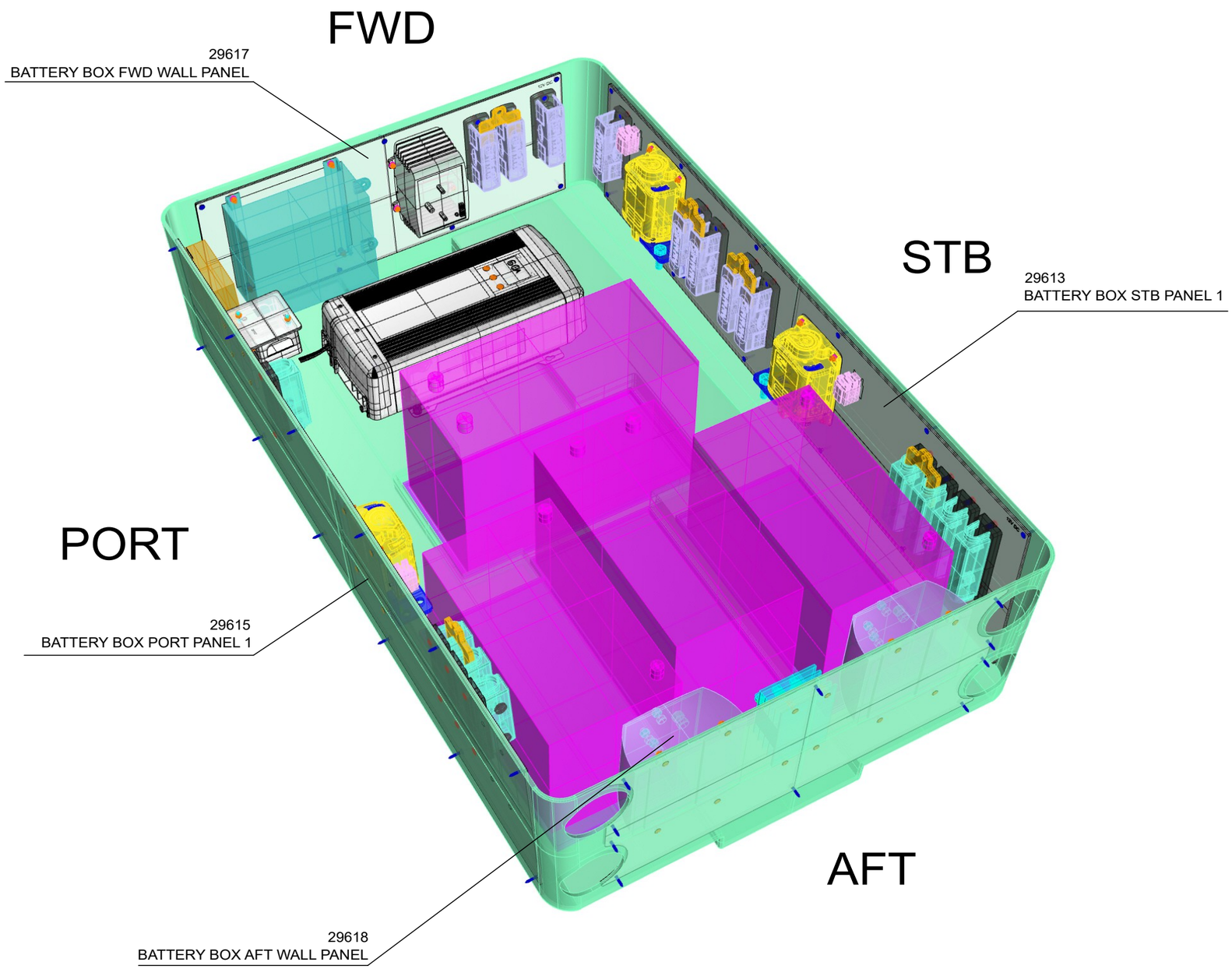

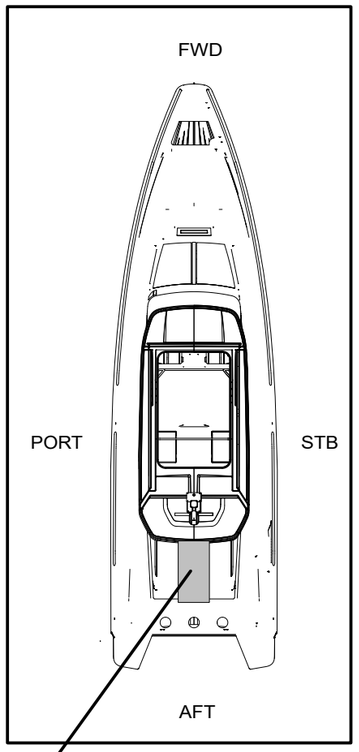

Date of modification	Modified by	Description
10.10.2023	PF	F22: 2004916; Not modified
20.2.2024	PF	G23; 2005054; Not modified
18.6.2024	PF	G24: 2005139; Not modified

Date	11.7.2019
Drawing by	TuM
Sheet rev.	24
Project rev.	G

NAVIX designed solutions
Copyright by

Boat	Sub-product code	Product code	Project ID
Axopar			
Boat model	Title	Loc	Sheet
37 MY20	BATTERY BOX - PANEL LAYOUT	HL	14 / 210

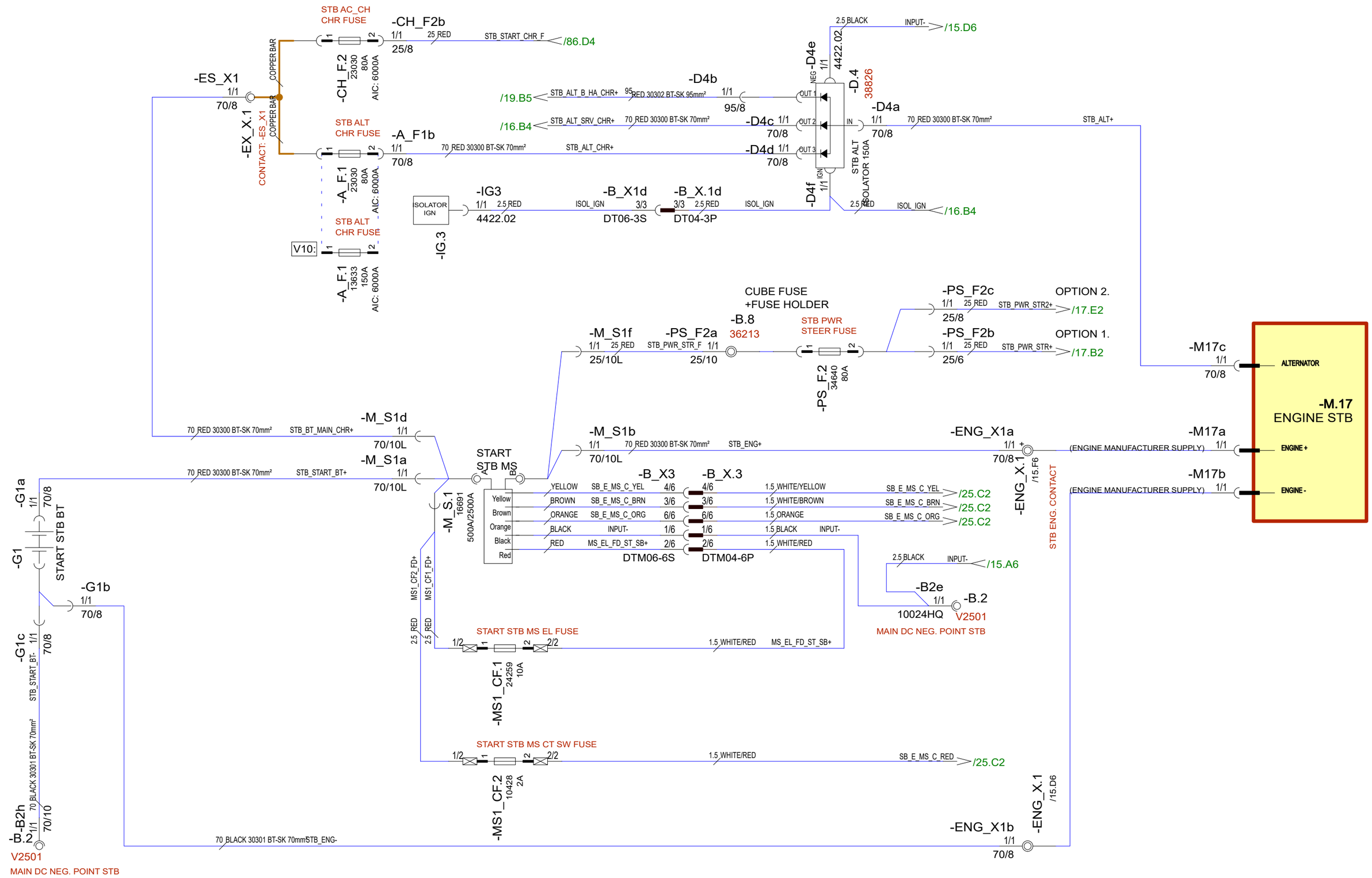

10.10.2023	PF	F22: 2004855; V10 update to cables and fusing, isolator	Date	14.1.2019	NAVIX designed solutions	Axopar		
20.2.2024	PF	G23; 2005054; Isolator link to removed (bow th)	Drawing by	TuM		Boat	Sub-product code	Product code	Project ID
18.6.2024	PF	G24: 2005139; Not modified	Sheet rev.	24		37 MY20	ENGINE STB - DIAGRAM	HL	15 / 210
Date of modification	Modified by	Description	Project rev.	G	Copyright by	Boat model	Title	Loc	Sheet

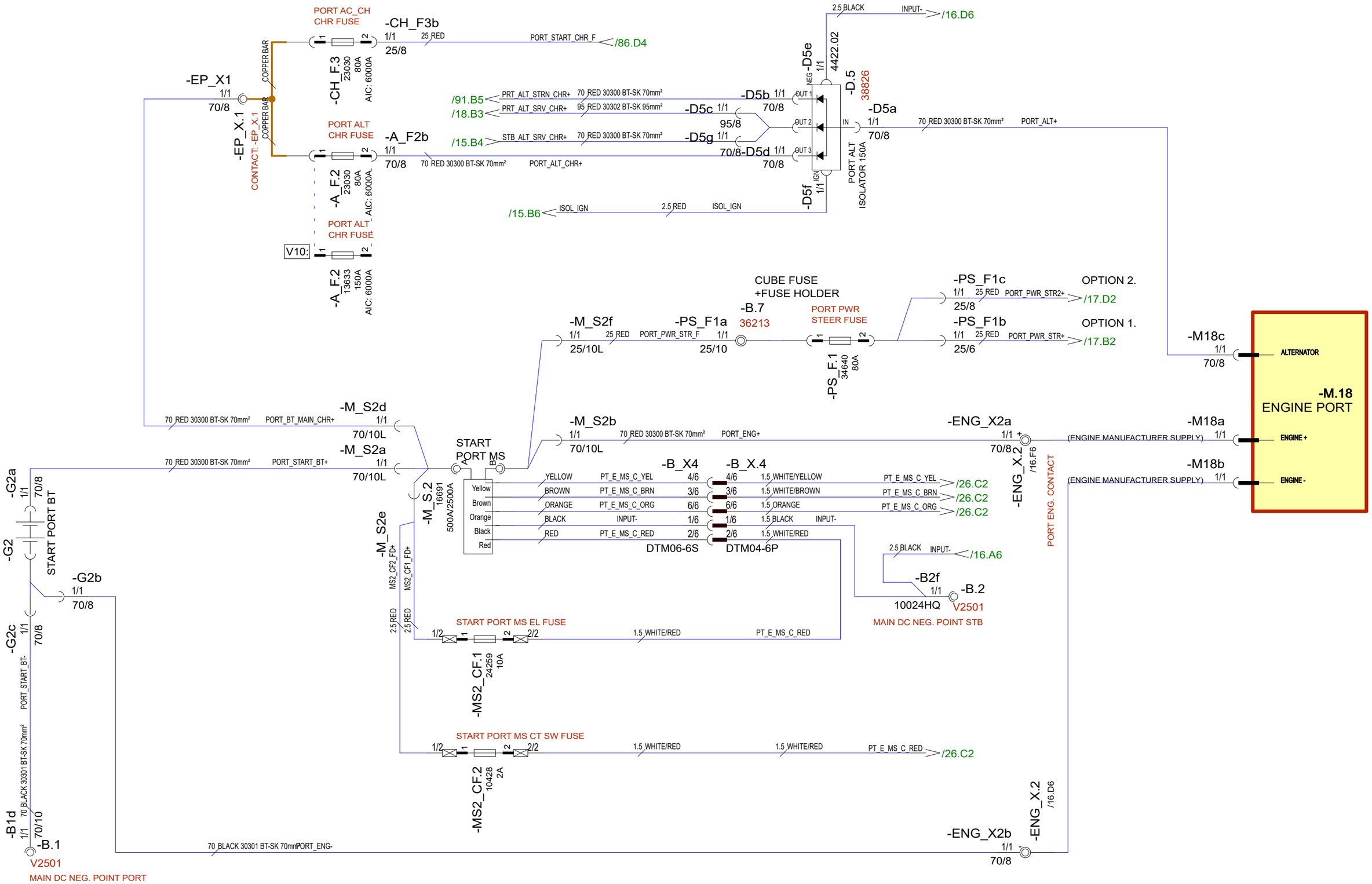

10.10.2023	PF	F22: 2004855; V10 update to cables and fusing, isolator	Date	14.1.2019	NAVIX designed solutions	Axopar		
20.2.2024	PF	G23; 2005054; Isolator link removed->charging to stern batt	Drawing by	TuM		Boat	Sub-product code	Product code	Project ID
18.6.2024	PF	G24: 2005139; Not modified	Sheet rev.	24		37 MY20	ENGINE PORT - DIAGRAM	HL	16 / 210
Date of modification	Modified by	Description	Project rev.	G	Copyright by	Boat model	Title	Loc	Sheet

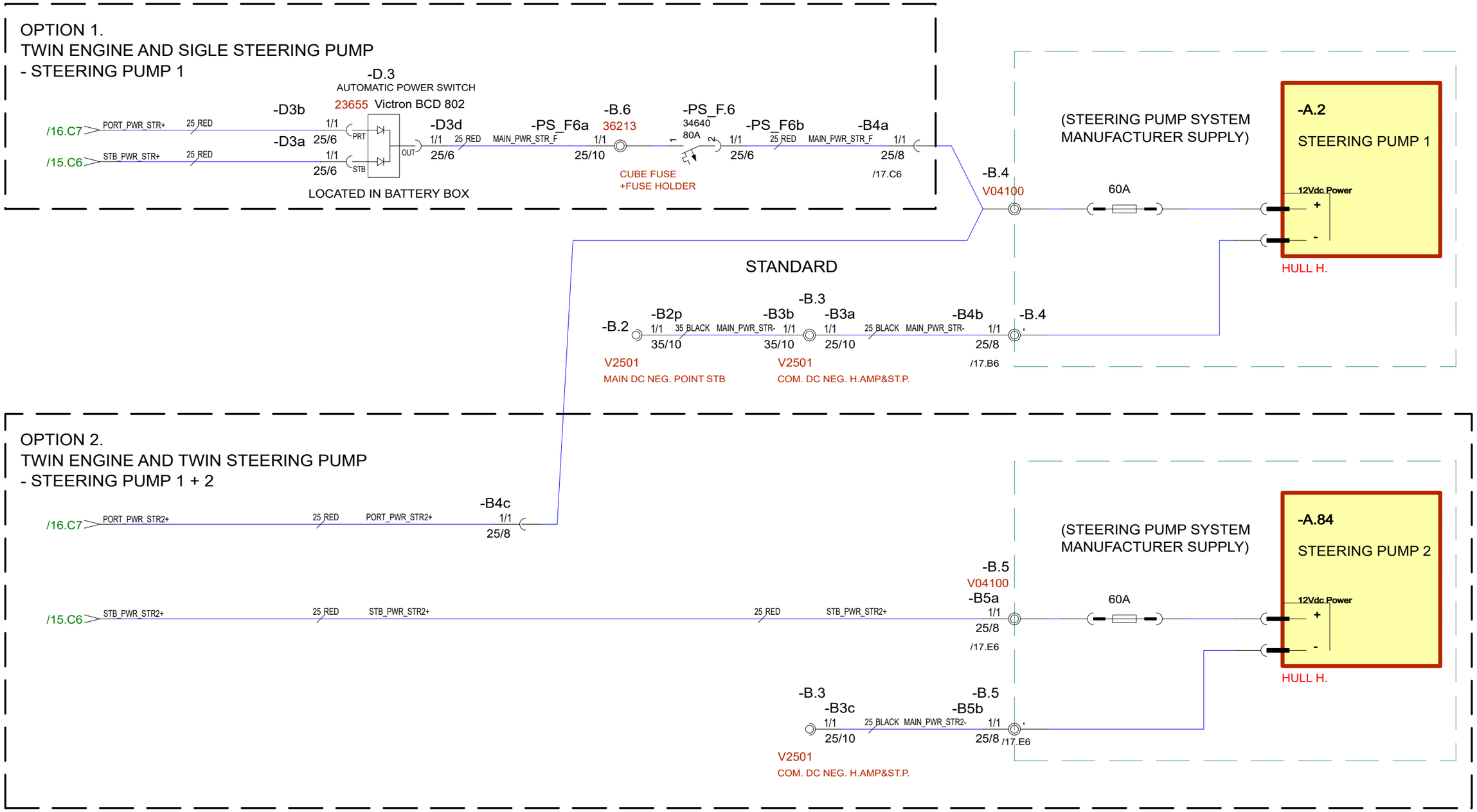

10.10.2023	PF	F22: 2004916; Not modified	Date	14.1.2019	NAVIX designed solutions	Axopar		
20.2.2024	PF	G23; 2005054; Not modified	Drawing by	TuM		Boat	Sub-product code	Product code / Project ID
18.6.2024	PF	G24: 2005139; Not modified	Sheet rev.	24		37 MY20	POWER STEER - DIAGRAM	HL
Date of modification	Modified by	Description	Project rev.	G	Copyright by	Boat model	Title	Loc / Sheet 17 / 210

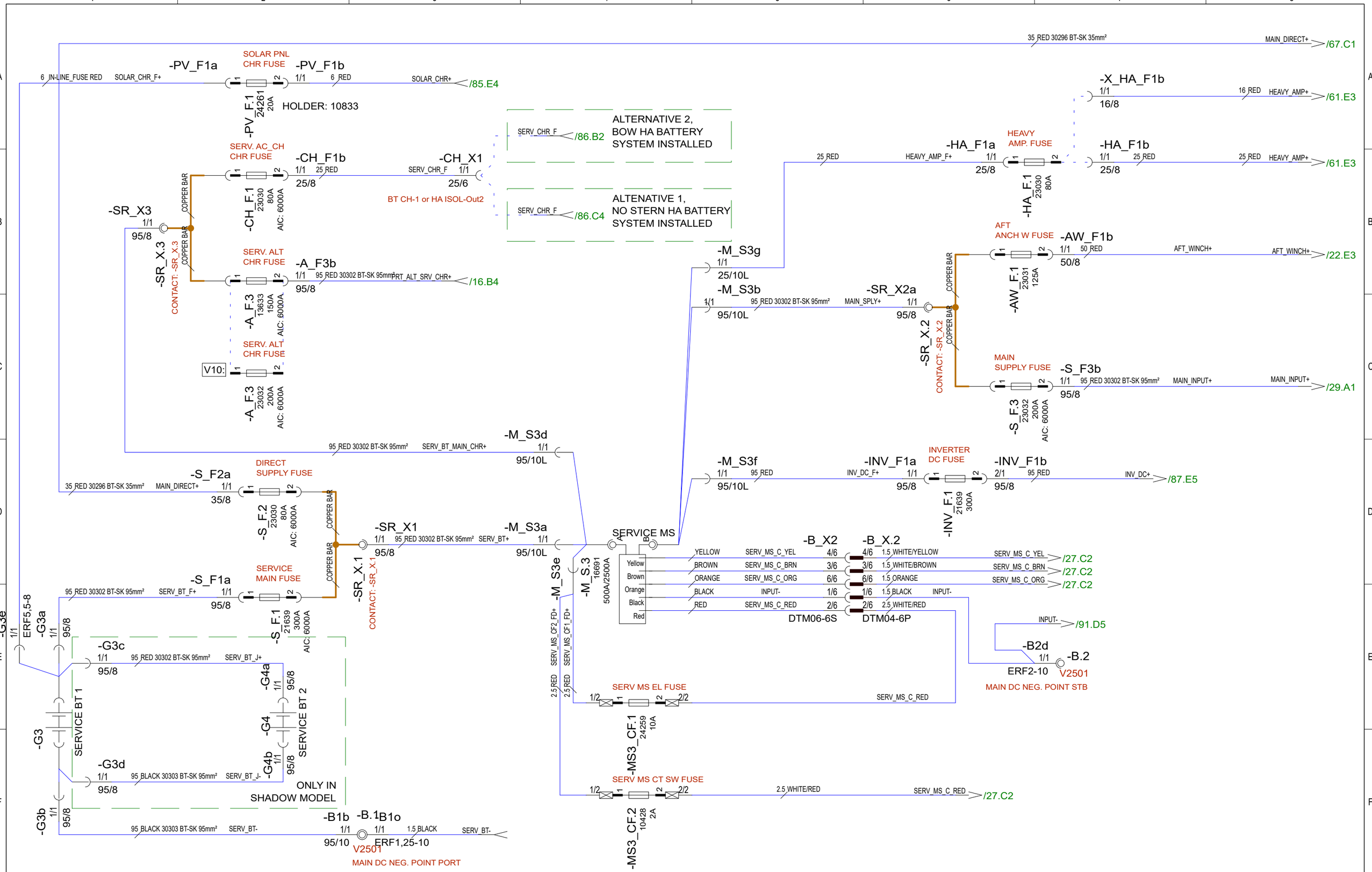

10.10.2023	PF	F22: 2004855; V10 update to cables and fusing	Date	14.1.2019	NAVIX designed solutions	Axopar		
20.2.2024	PF	G23; 2005054; Not modified	Drawing by	TuM		Boat	Sub-product code	Product code / Project ID
18.6.2024	PF	G24: 2005139; Service bt 3 added, inverter cables ->95mm2 & fuse 300A	Sheet rev.	24		37 MY20	SERVICE - DIAGRAM	HL
Date of modification	Modified by	Description	Project rev.	G	Copyright by	Boat model	Title	Loc / Sheet 18 / 210

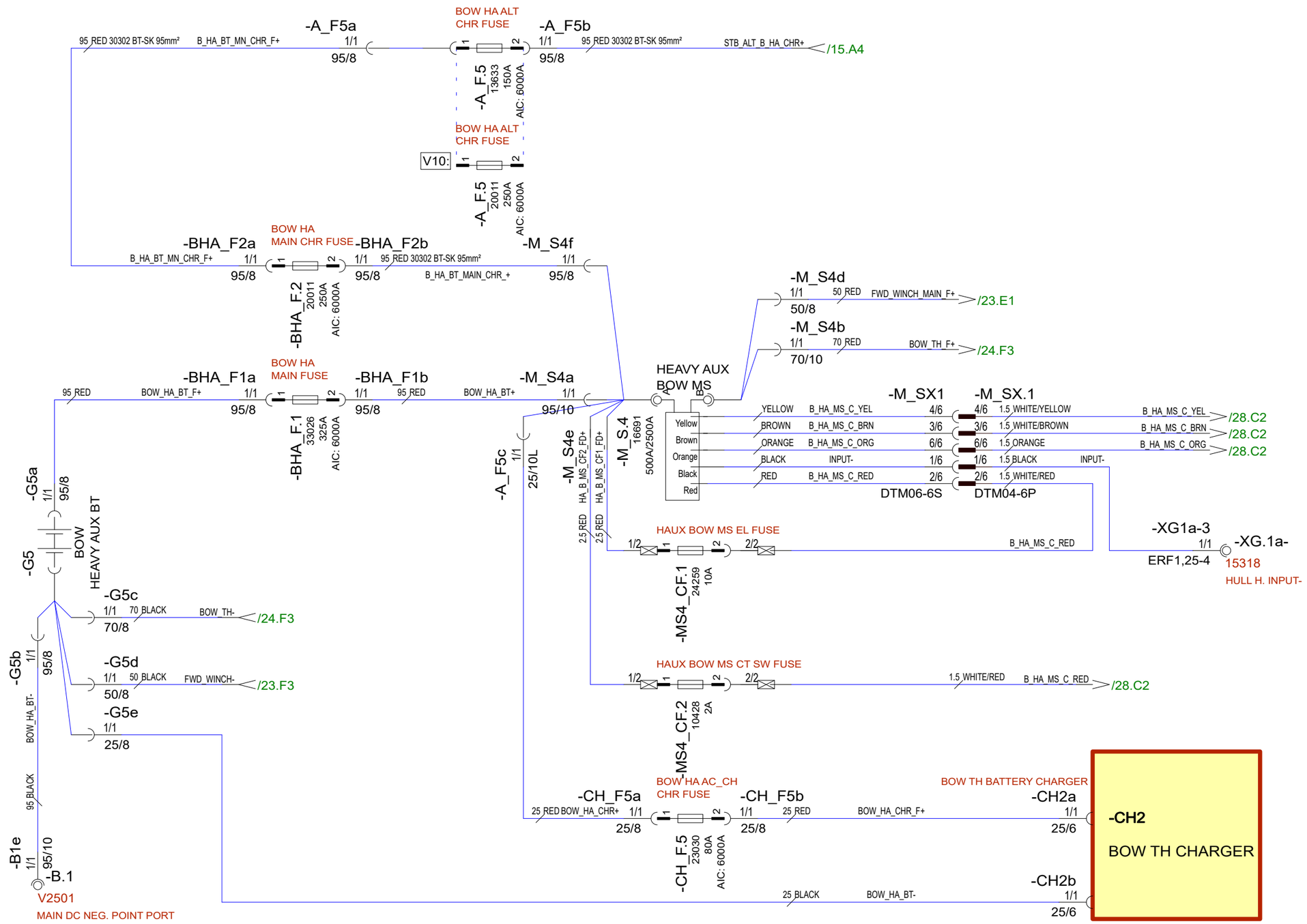

10.10.2023	PF	F22: 2004855; V10 update to cables and fusing	Date	14.1.2019	NAVIX designed solutions	Axopar		
20.2.2024	PF	G23; 2005054; Removed std chrgr, added cables for dedicated bow chrgr	Drawing by	TuM		Boat	Sub-product code	Product code / Project ID
18.6.2024	PF	G24: 2005139; Not modified	Sheet rev.	24		37 MY20	HEAVY AUX BOW - DIAGRAM	HL
Date of modification	Modified by	Description	Project rev.	G	Copyright by	Boat model	Title	Loc / Sheet: 19 / 210

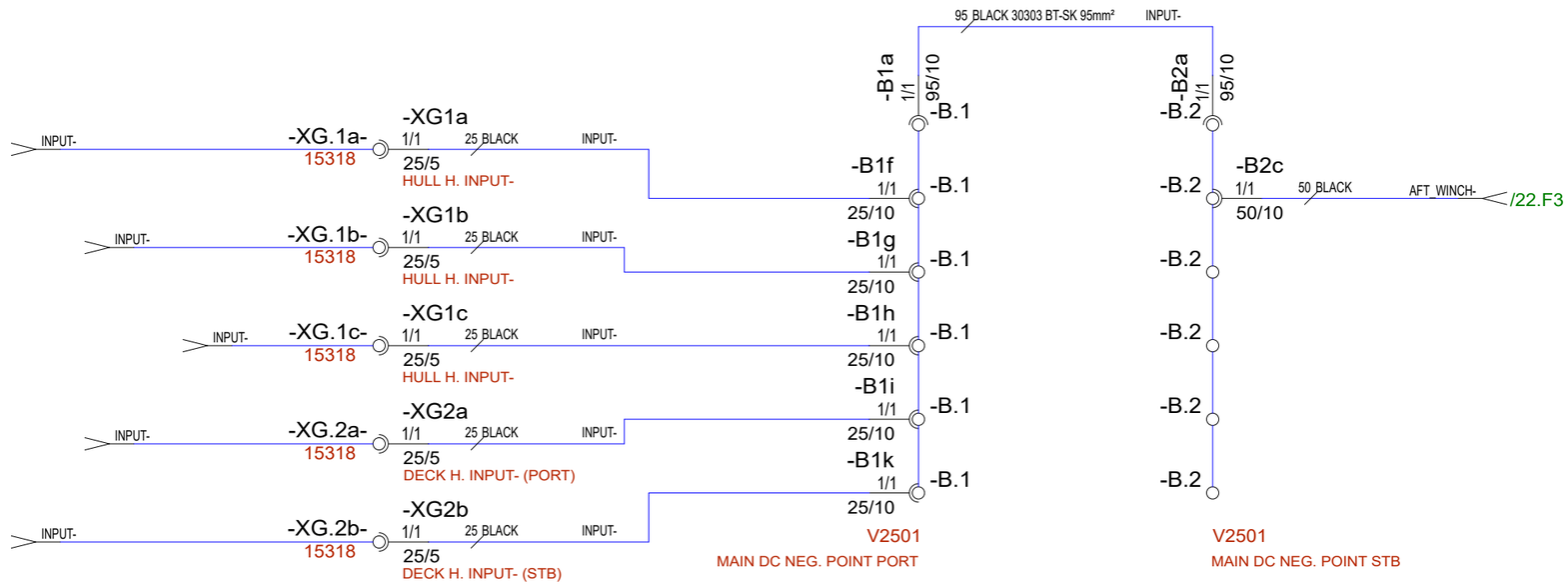

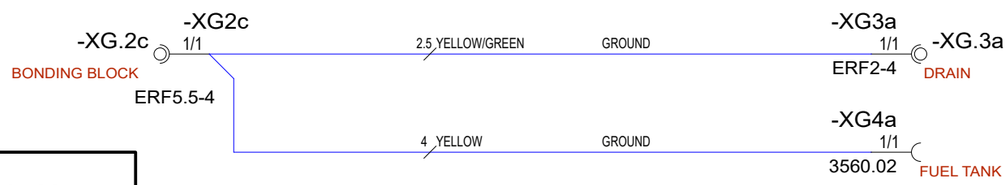

NOTICE!
INSTALL CABLES TO DEVICE SO THAT LARGEST TERMINALS ARE CLOSEST TO DEVICES CONDUCTIVE AREA.

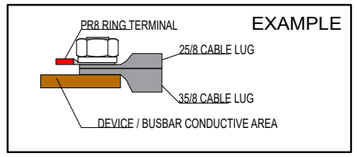

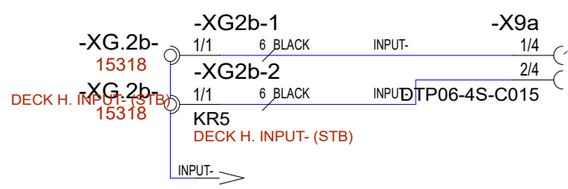

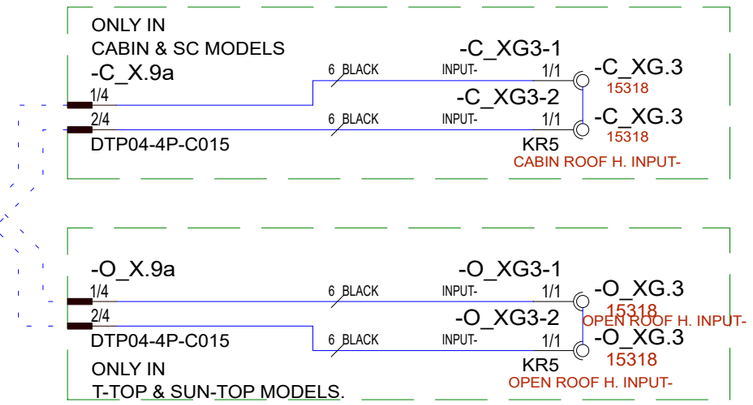

Date of modification	Modified by	Description
10.10.2023	PF	F22: 2004916; Not modified
20.2.2024	PF	G23; 2005054; Not modified
18.6.2024	PF	G24: 2005139; Not modified

Date	14.1.2019
Drawing by	TuM
Sheet rev.	24
Project rev.	G

NAVIX designed solutions
Copyright by

Boat	Sub-product code	Product code	Project ID
Axopar			
Boat model	Title	Loc	Sheet
37 MY20	MAIN DC NEGATIVE POINT - DIAGRAM	HL	20 / 210

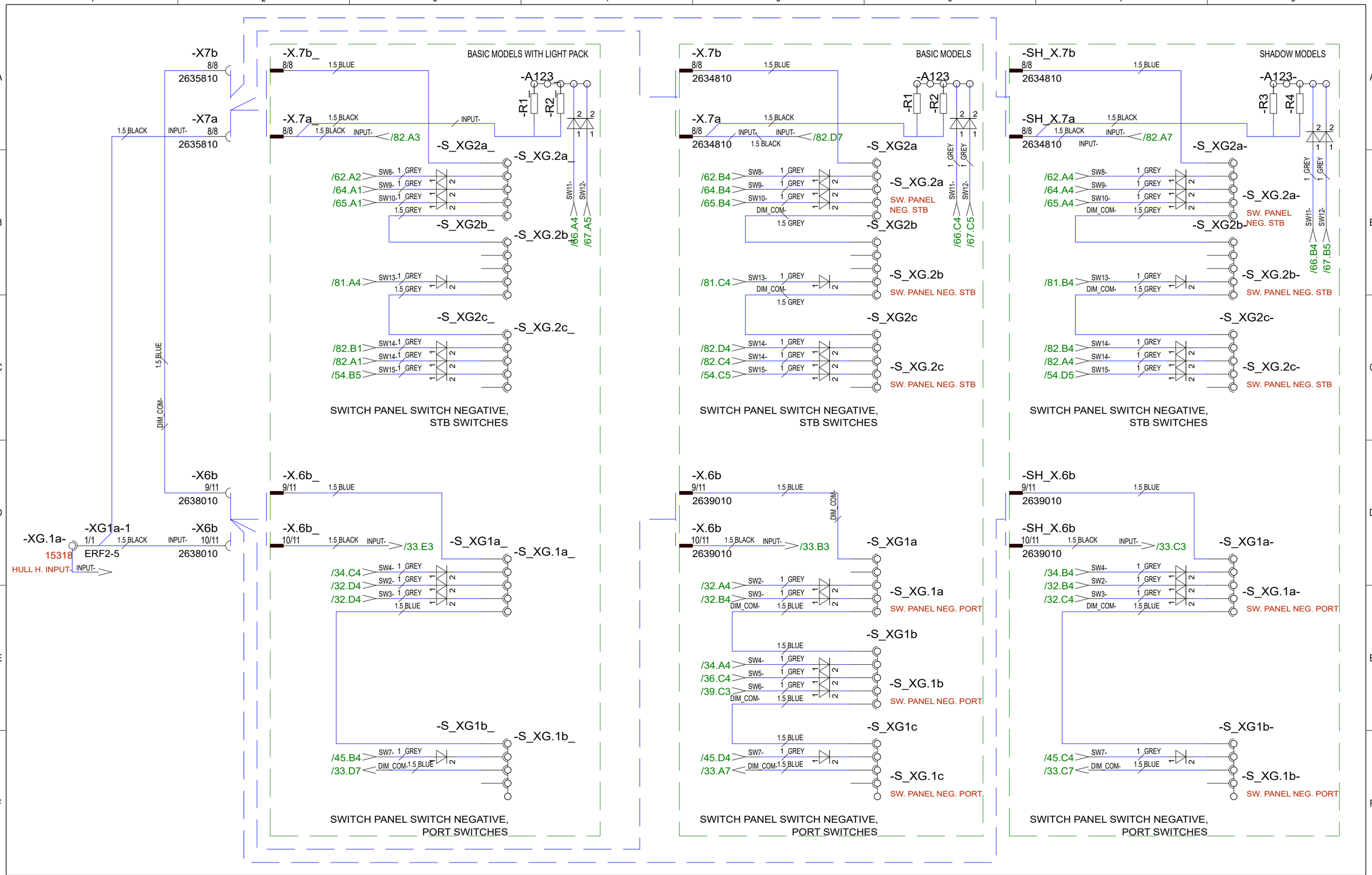

10.10.2023	PF	F22: 2004916; Added dimmer and diodes	Date	14.1.2019	NAVIX designed solutions	Axopar		
20.2.2024	PF	G23; 2005054; LP version of swp added	Drawing by	TuM		Boat	Sub-product code	Product code	Project ID
18.6.2024	PF	G24: 2005139; Not modified	Sheet rev.	24		37 MY20	SWITCH PANEL INPUT- - DIAGRAM	HL	21/ 210
Date of modification	Modified by	Description	Project rev.	G	Copyright by	Boat model	Title	Loc	Sheet

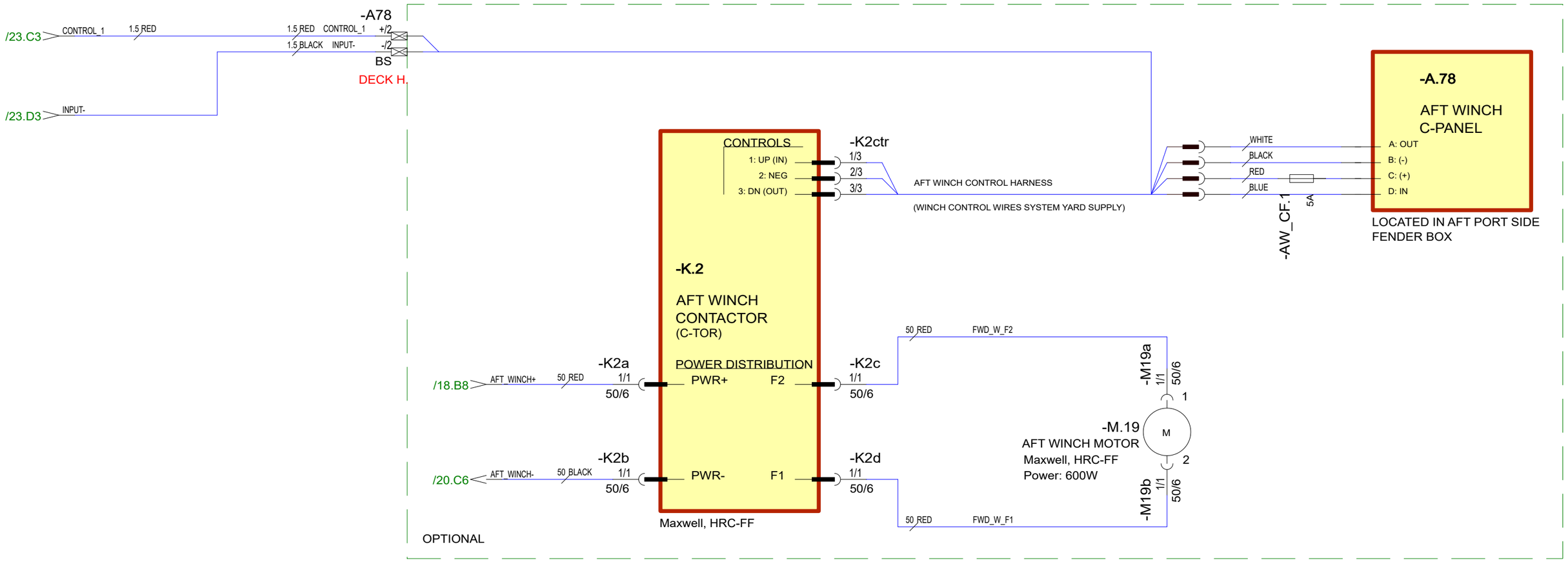

10.10.2023	PF	F22: 2004916; Not modified	Date	14.1.2019	NAVIX designed solutions	Axopar		
20.2.2024	PF	G23; 2005054; Not modified	Drawing by	TuM		Boat	Sub-product code	Product code	Project ID
18.6.2024	PF	G24: 2005139; Not modified	Sheet rev.	24		37 MY20	AFT WINCH - DIAGRAM	HL	22 / 210
Date of modification	Modified by	Description	Project rev.	G	Copyright by	Boat model	Title	Loc	Sheet

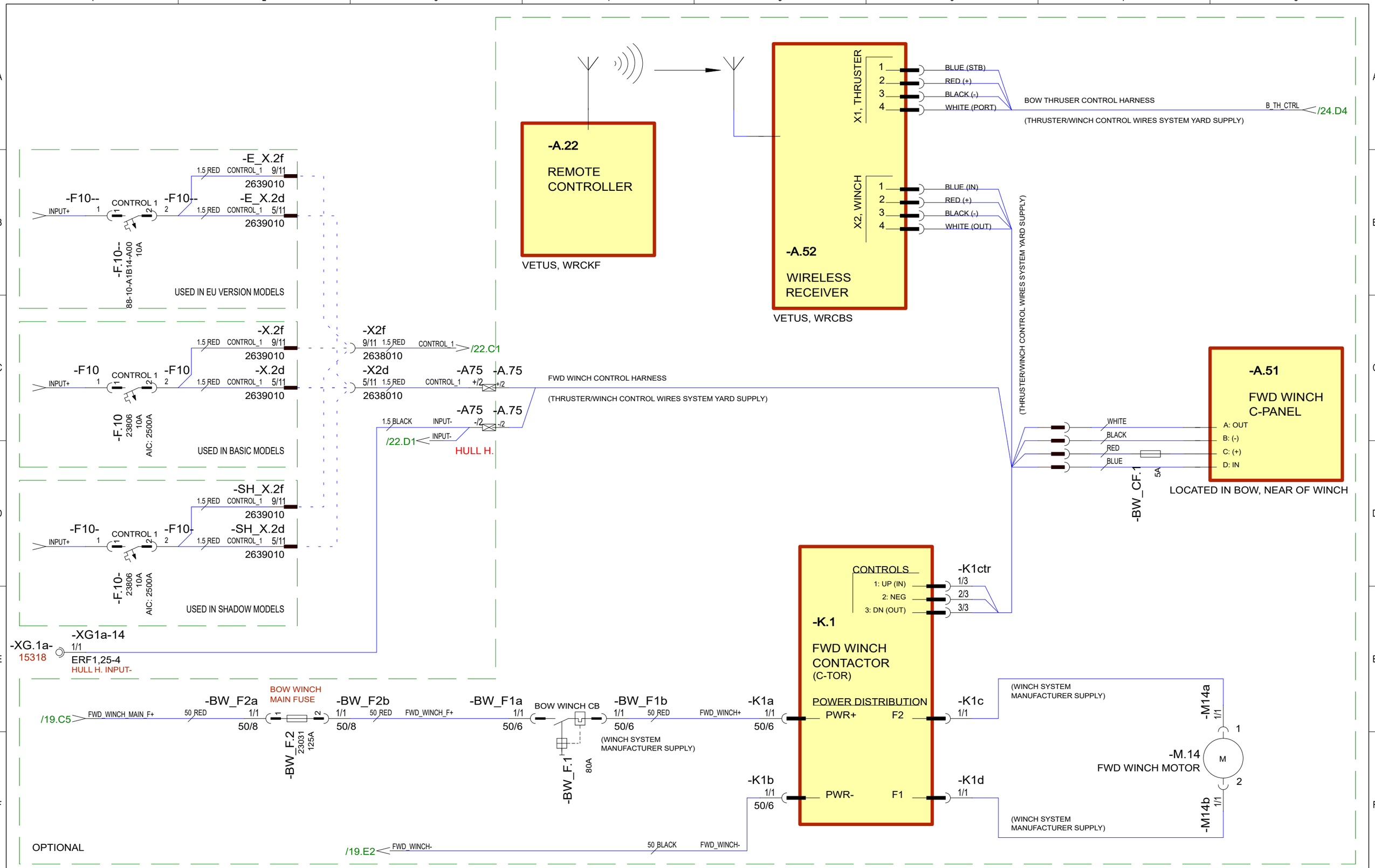

Date of modification	Modified by	Description
10.10.2023	PF	F22: 2004916; Winch fuse ->125A, cables ->50m2
20.2.2024	PF	G23; 2005054; Not modified
18.6.2024	PF	G24: 2005139; Not modified

Date	14.1.2019
Drawing by	TuM
Sheet rev.	24
Project rev.	G

NAVIX designed solutions

Copyright by

Boat	Sub-product code	Product code	Project ID
Axopar			

Boat model	Title	Loc	Sheet
37 MY20	FWD WINCH/ WIRELESS REMOTE - DIAGRAM	HL	23 / 210

BOW THRUSTER CONTROL ALTERNATIVES:

1. ALTERNATIVE 1:
DEFAULT CONNECTION.
THRUSTER CONTROL HARNESS
IS CONNECTED TO THRUSTER
CTRL JOYSTICK:
-A17 Connecter to -A.17-1

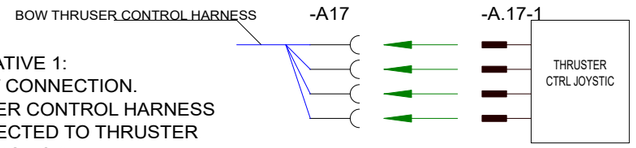

2. ALTERNATIVE 2:
ISM SYSTEM CONNECTION.
THRUSTER CONTROL HARNESS
IS CONNECTED TO ISM SYSTEM:
-A17 Connected to -A.17-2

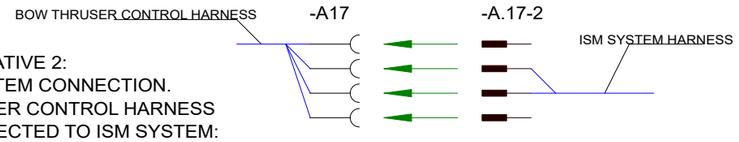

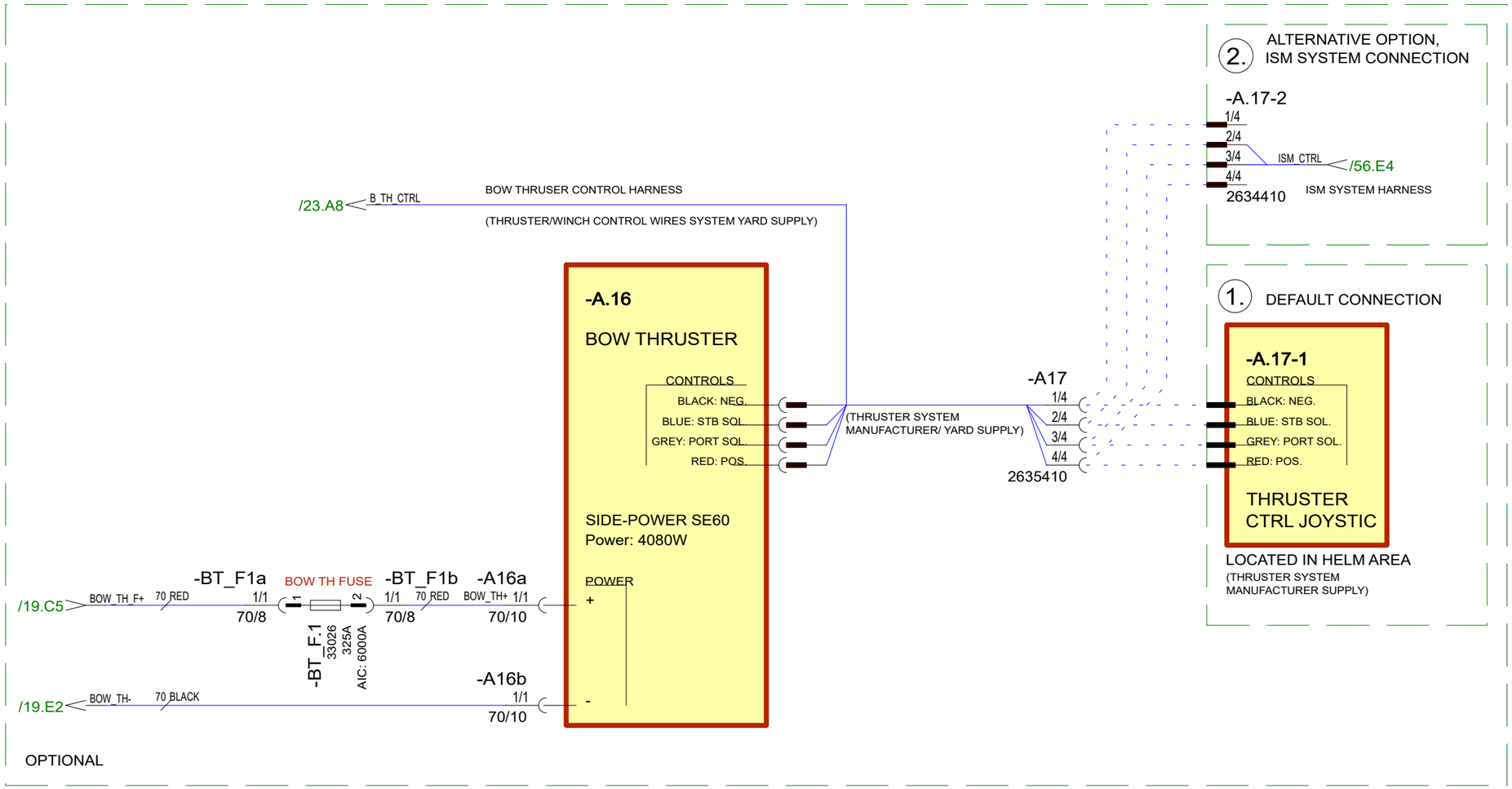

10.10.2023	PF	F22: 2004916; Not modified	Date	14.1.2019	NAVIX designed solutions	Axopar		
20.2.2024	PF	G23; 2005054; Not modified	Drawing by	TuM		Boat	Sub-product code	Product code	Project ID
18.6.2024	PF	G24: 2005139; Not modified	Sheet rev.	24		37 MY20	BOW THRUSTER - DIAGRAM	HL	24 / 210
Date of modification	Modified by	Description	Project rev.	G	Copyright by	Boat model	Title	Loc	Sheet

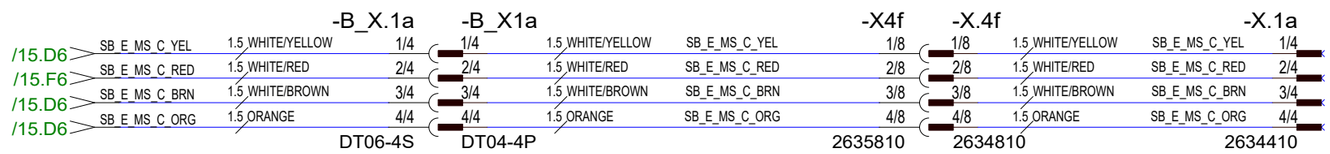

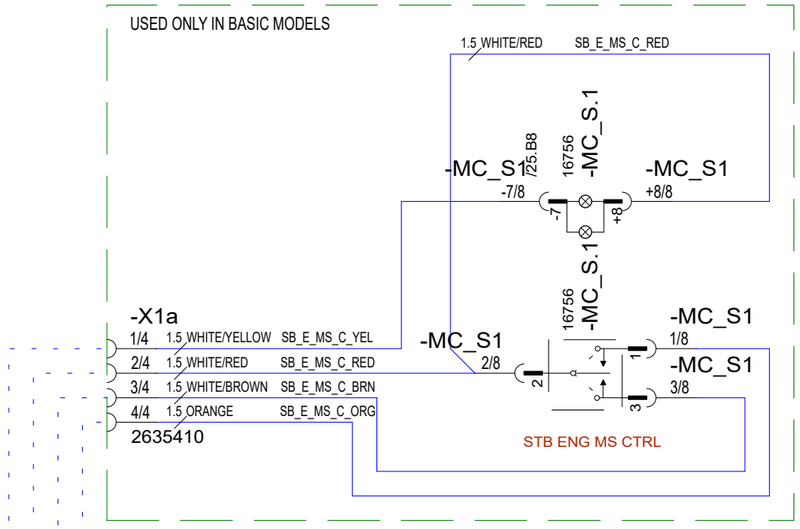

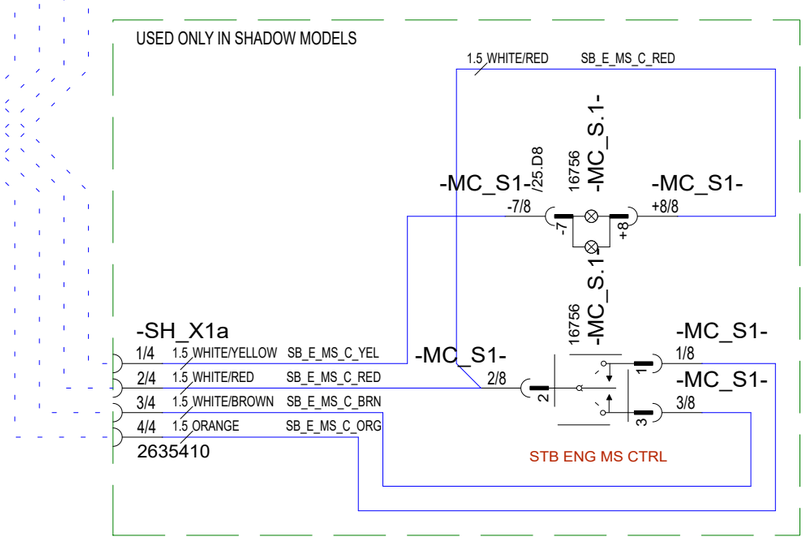

10.10.2023	PF	F22: 2004916; Not modified	Date 14.1.2019	NAVIX designed solutions	Axopar			
20.2.2024	PF	G23; 2005054; Not modified	Drawing by TuM		Boat	Sub-product code	Product code	Project ID
18.6.2024	PF	G24: 2005139; Not modified	Sheet rev. 24		37 MY20	MAIN SWITCH CTRL SW START STB - DIAGRAM	HL	25 / 210
Date of modification	Modified by	Description	Project rev. G	Copyright by	Boat model	Title	Loc	Sheet

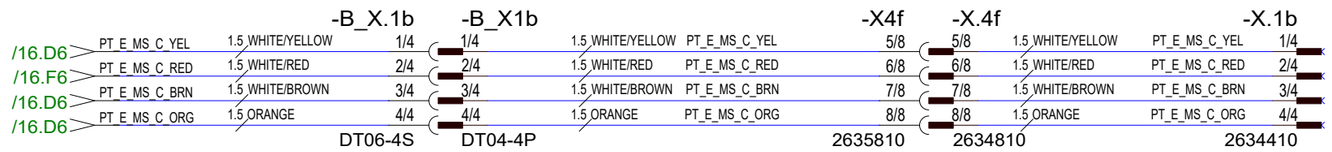

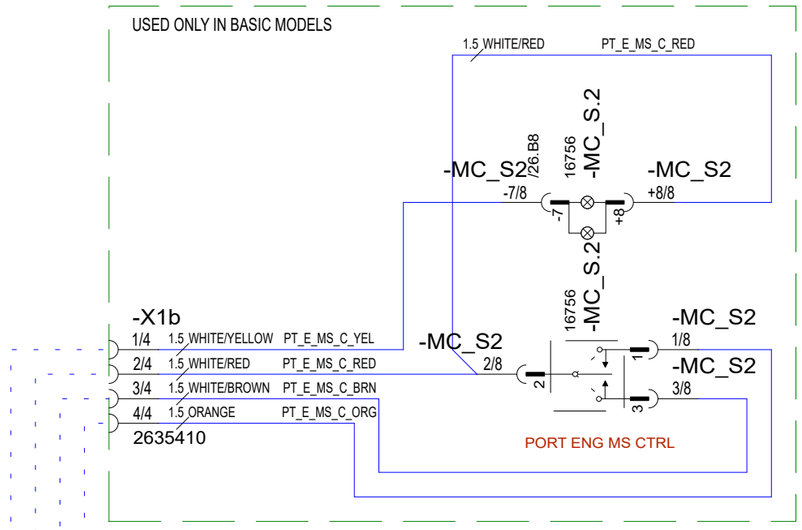

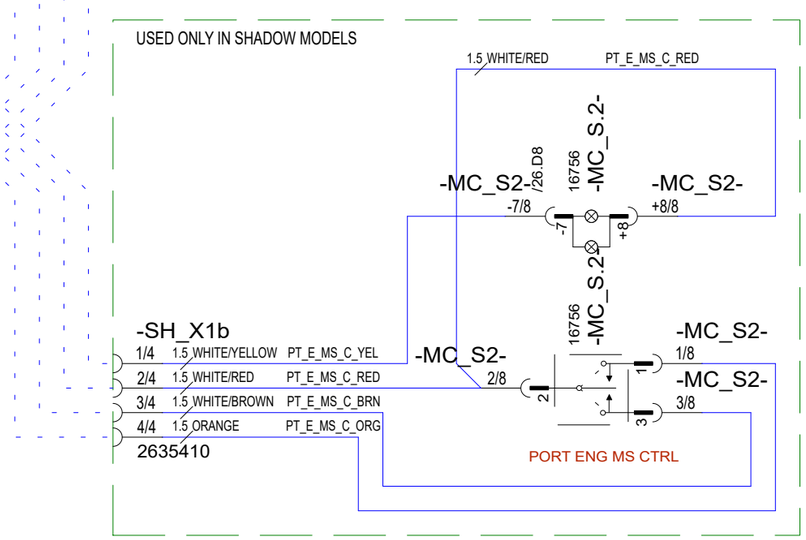

10.10.2023	PF	F22: 2004916; Not modified	Date 16.4.2020	NAVIX designed solutions	Axopar			
20.2.2024	PF	G23; 2005054; Not modified	Drawing by TuM		Boat	Sub-product code	Product code	Project ID
18.6.2024	PF	G24: 2005139; Not modified	Sheet rev. 24		37 MY20	MAIN SWITCH CTRL SW START PORT - DIAGRAM	HL	26 / 210
Date of modification	Modified by	Description	Project rev. G	Copyright by	Boat model	Title	Loc	Sheet

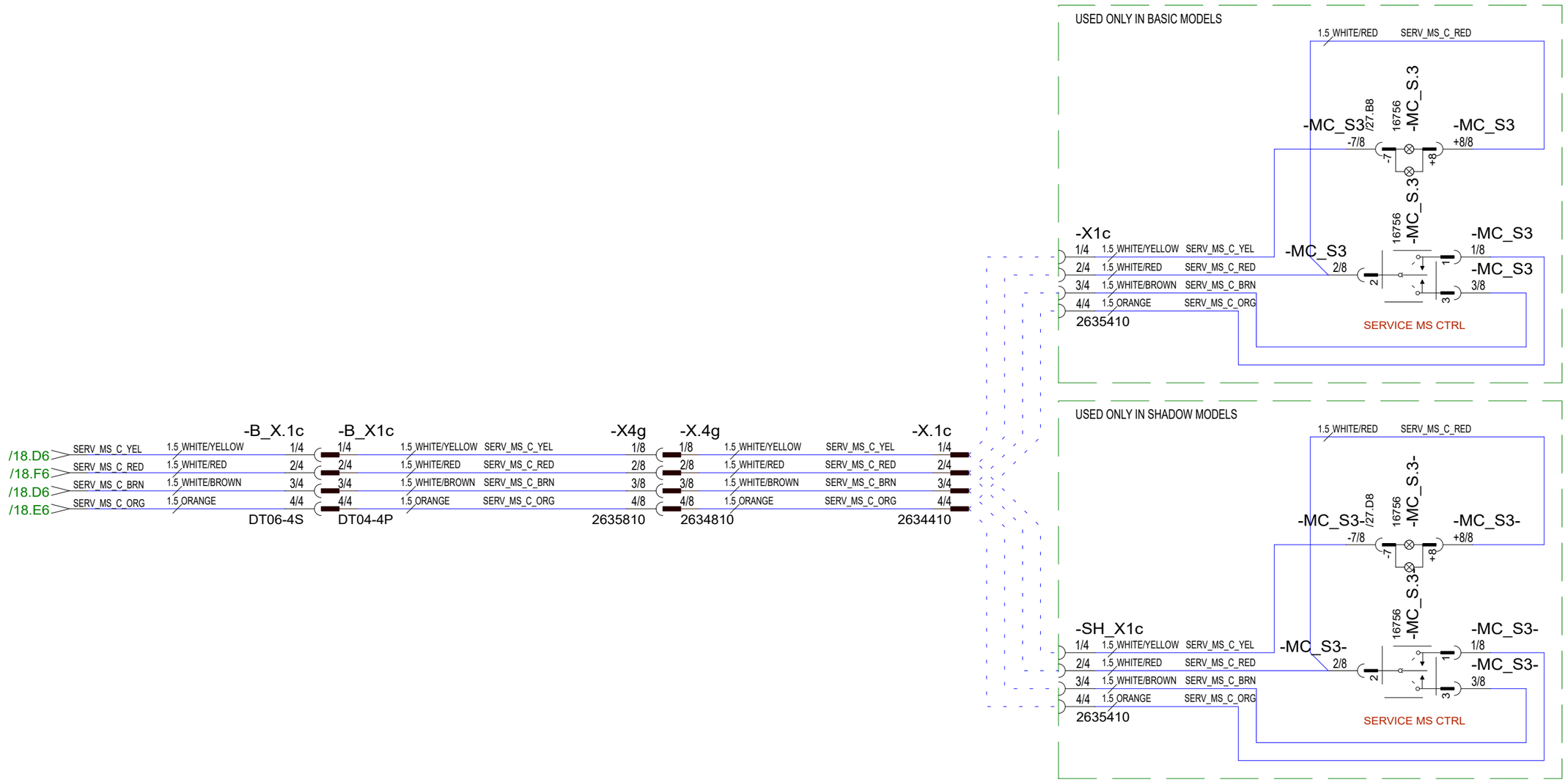

10.10.2023	PF	F22: 2004916; Not modified	Date 14.5.2019	NAVIX designed solutions	Axopar			
20.2.2024	PF	G23; 2005054; Not modified	Drawing by TuM		Boat	Sub-product code	Product code	Project ID
18.6.2024	PF	G24: 2005139; Not modified	Sheet rev. 24		37 MY20	MAIN SWITCH CTRL SW SERVICE - DIAGRAM	HL	27 / 210
Date of modification	Modified by	Description	Project rev. G	Copyright by	Boat model	Title	Loc	Sheet

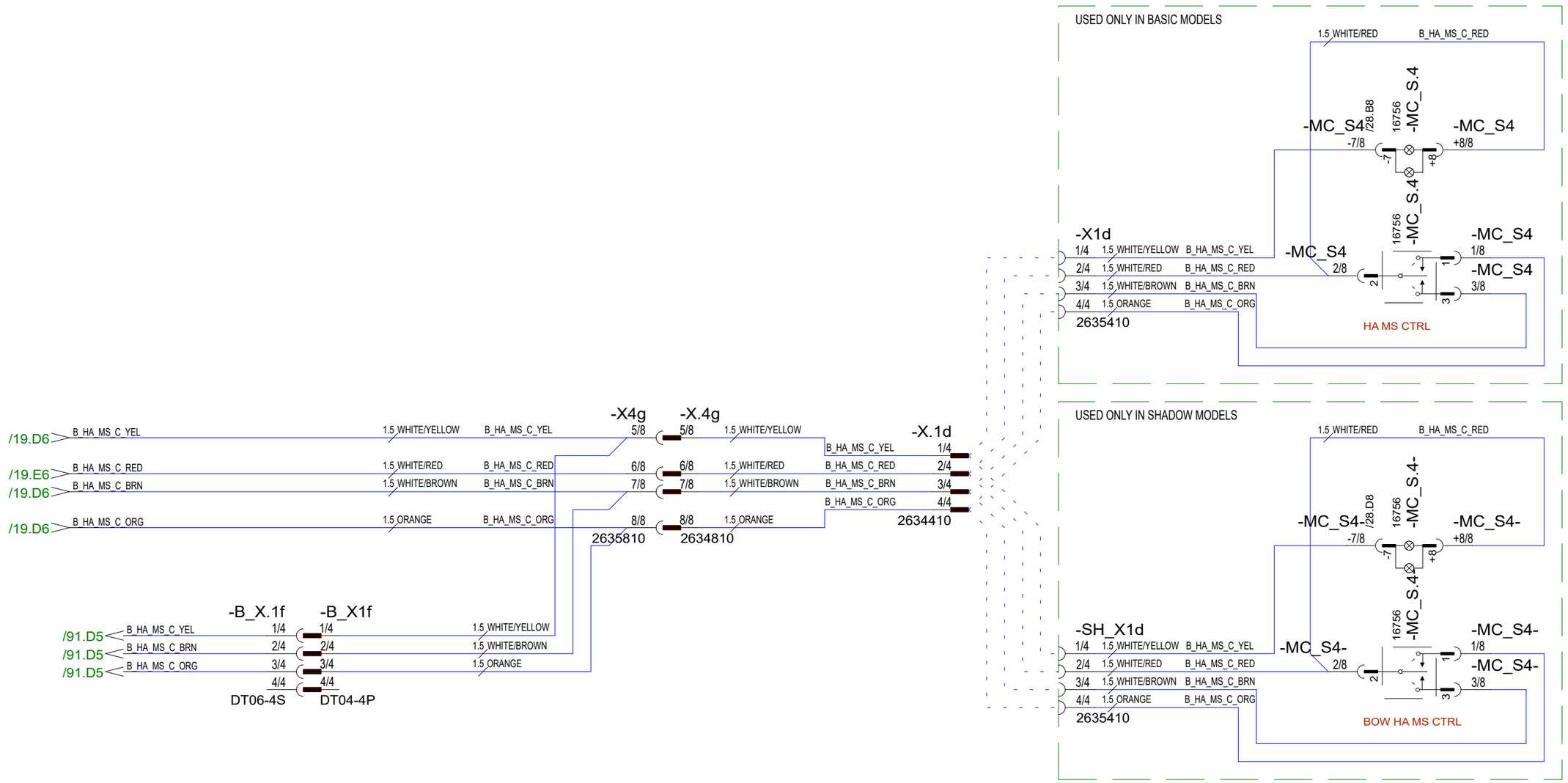

10.10.2023	PF	F22: 2004916; Not modified	Date	16.4.2020	NAVIX designed solutions	Axopar		
20.2.2024	PF	G23; 2005054; Control to stern th ms added	Drawing by	TuM		Boat	Sub-product code	Product code	Project ID
18.6.2024	PF	G24: 2005139; Not modified	Sheet rev.	24		37 MY20	MAIN SWITCH CTRL SW BOW H AUX - DIAGRAM	HL	28 / 210
Date of modification	Modified by	Description	Project rev.	G	Copyright by	Boat model	Title	Loc	Sheet

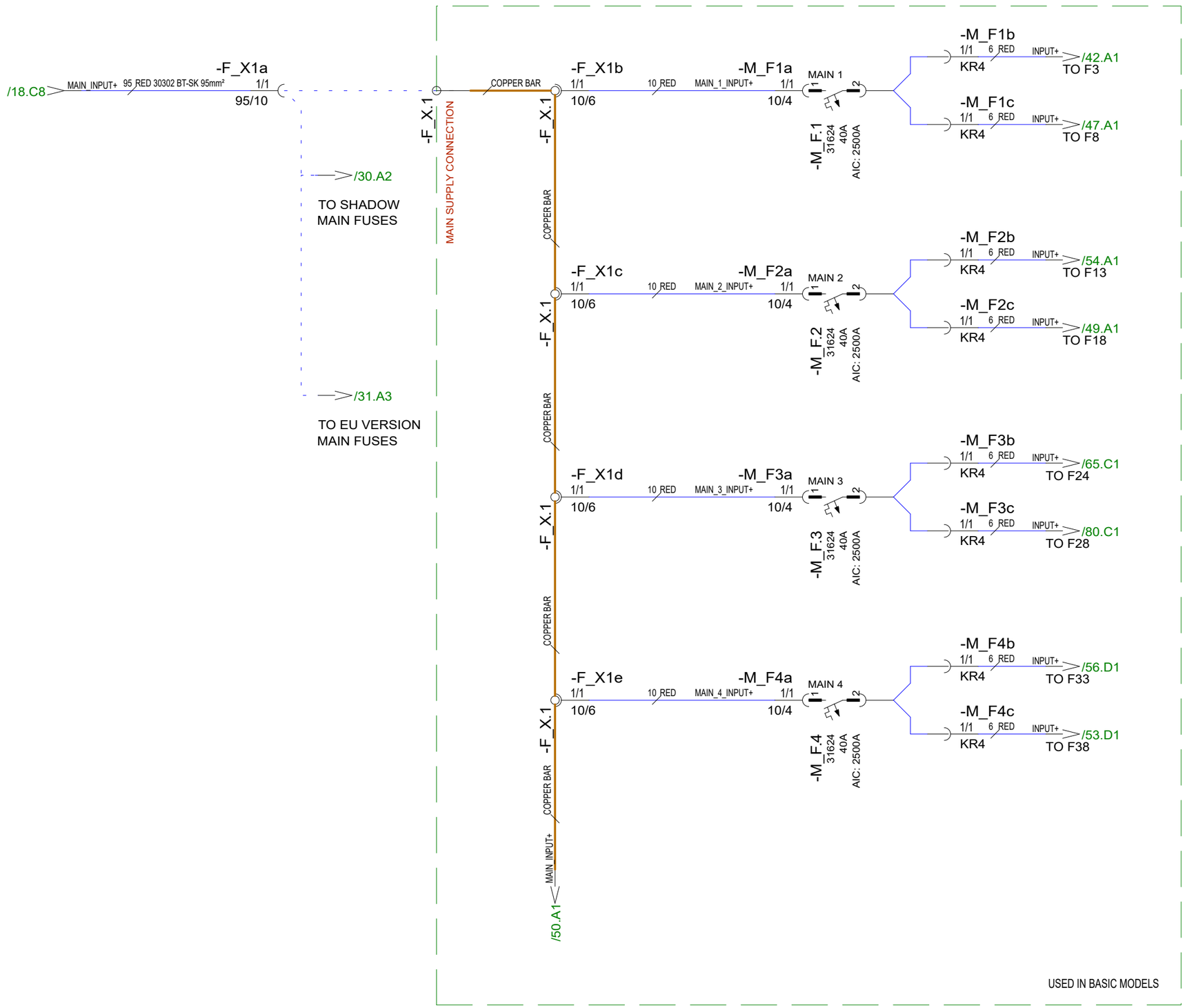

10.10.2023	PF	F22: 2004916; Not modified	Date	14.1.2019	NAVIX designed solutions	Axopar		
20.2.2024	PF	G23; 2005054; Not modified	Drawing by	TuM		Boat	Sub-product code	Product code / Project ID
18.6.2024	PF	G24: 2005139; Not modified	Sheet rev.	24		37 MY20	MAIN SUPPLY - DIAGRAM	HL
Date of modification	Modified by	Description	Project rev.	G	Copyright by	Boat model	Title	Loc / 29 / 210 Sheet

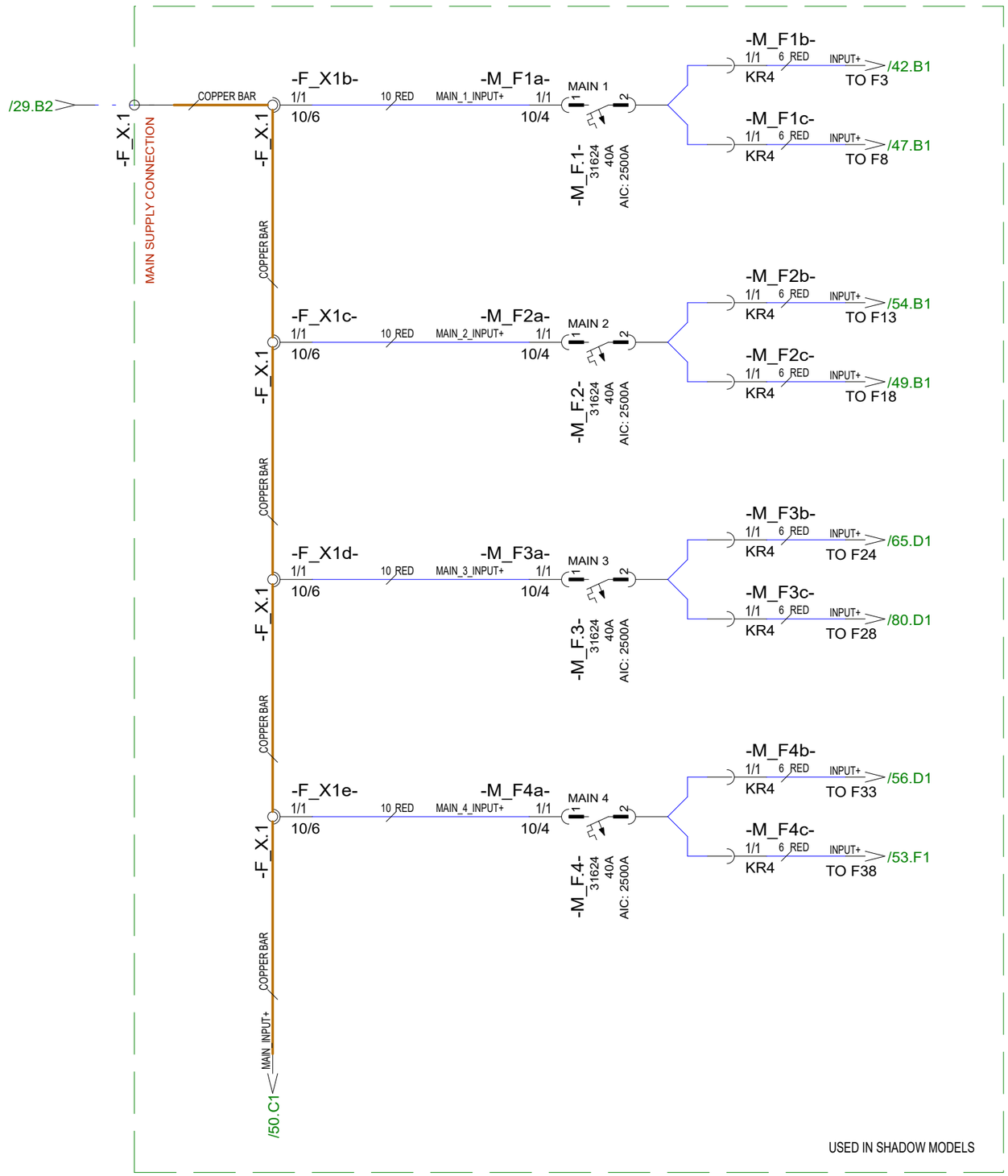

10.10.2023	PF	F22: 2004916; Not modified	Date	23.4.2020	NAVIX designed solutions	Axopar		
20.2.2024	PF	G23; 2005054; Not modified	Drawing by	TuM		Boat	Sub-product code	Product code / Project ID
18.6.2024	PF	G24: 2005139; Not modified	Sheet rev.	24		37 MY20	MAIN SUPPLY - DIAGRAM	HL
Date of modification	Modified by	Description	Project rev.	G	Copyright by	Boat model	Title	Loc / Sheet: 30 / 210

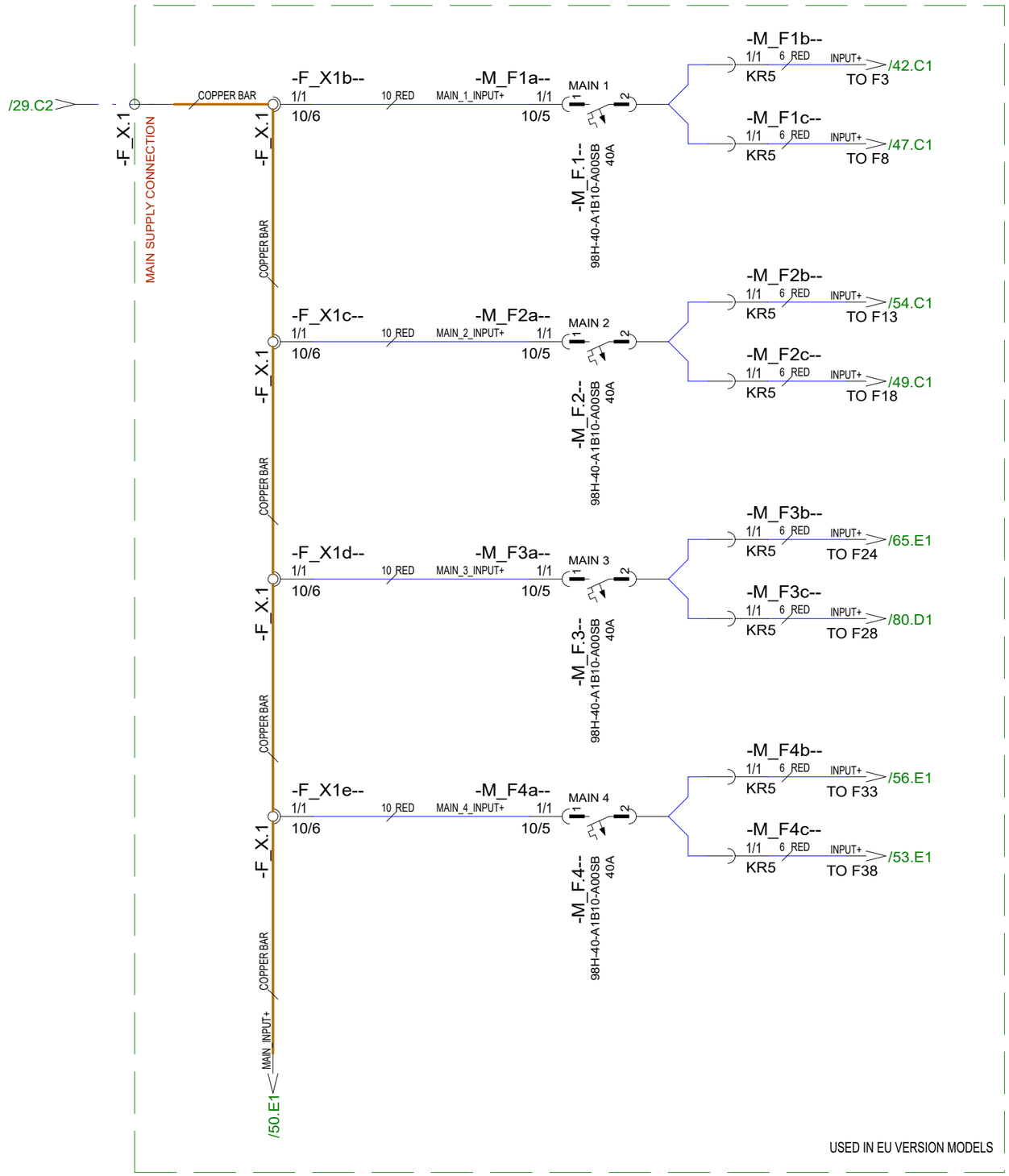

10.10.2023	PF	F22: 2004916; Not modified	Date	23.04.2020	NAVIX designed solutions	Axopar		
20.2.2024	PF	G23; 2005054; Not modified	Drawing by	TuM		Boat	Sub-product code	Product code	Project ID
18.6.2024	PF	G24: 2005139; Not modified	Sheet rev.	24		37 MY20	MAIN SUPPLY - DIAGRAM	HL	31/ 210
Date of modification	Modified by	Description	Project rev.	G	Copyright by	Boat model	Title	Loc	Sheet

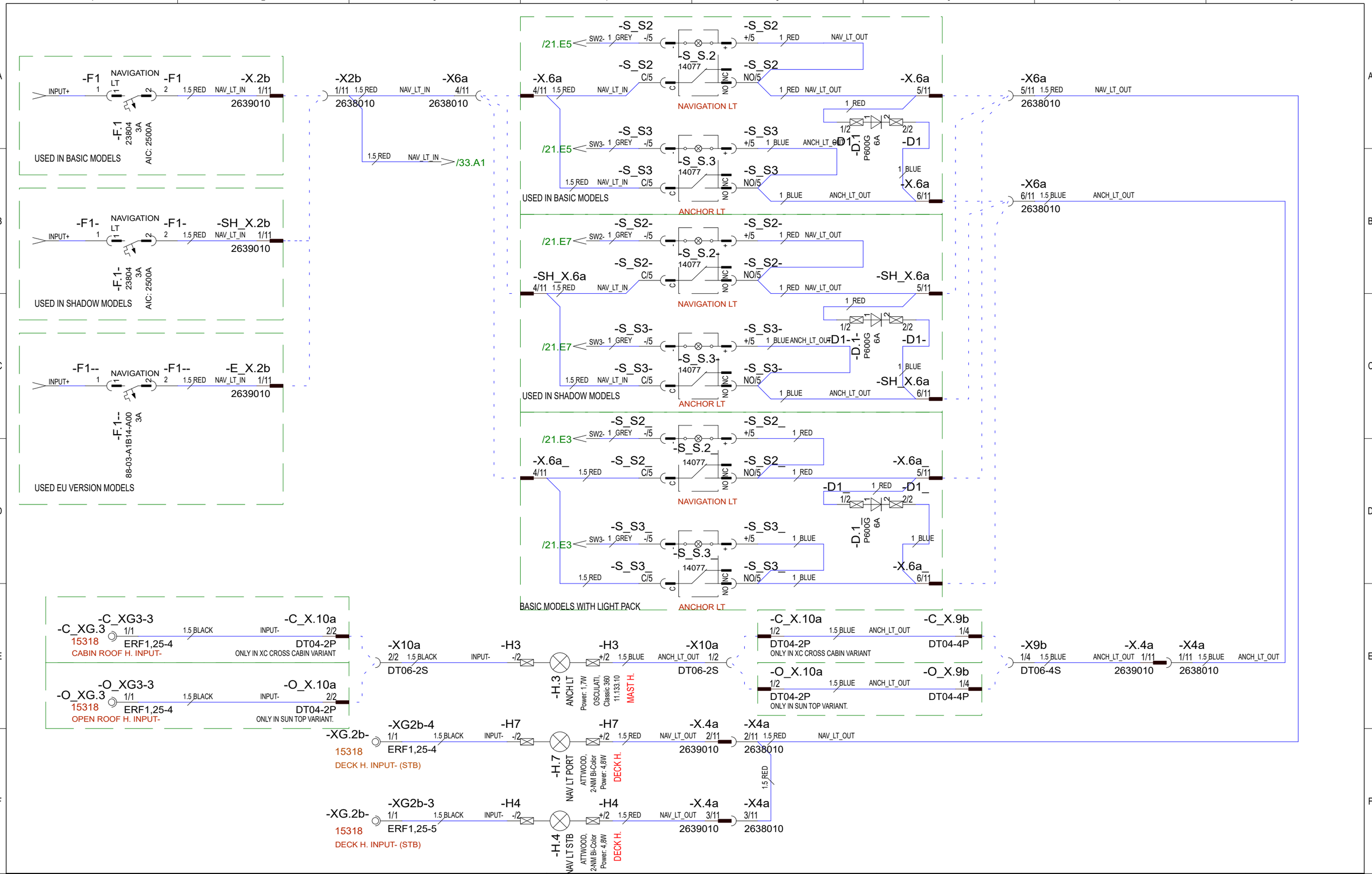

10.10.2023	PF	F22: 2004916; Not modified	Date	14.1.2019	NAVIX designed solutions	Axopar		
20.2.2024	PF	G23; 2005054; Light pack version added	Drawing by	TuM		Boat	Sub-product code	Product code / Project ID
18.6.2024	PF	G24: 2005139; Not modified	Sheet rev.	24		37 MY20	NAVIGATION LIGHTS - DIAGRAM	HL
Date of modification	Modified by	Description	Project rev.	G	Copyright by	Boat model	Title	Loc

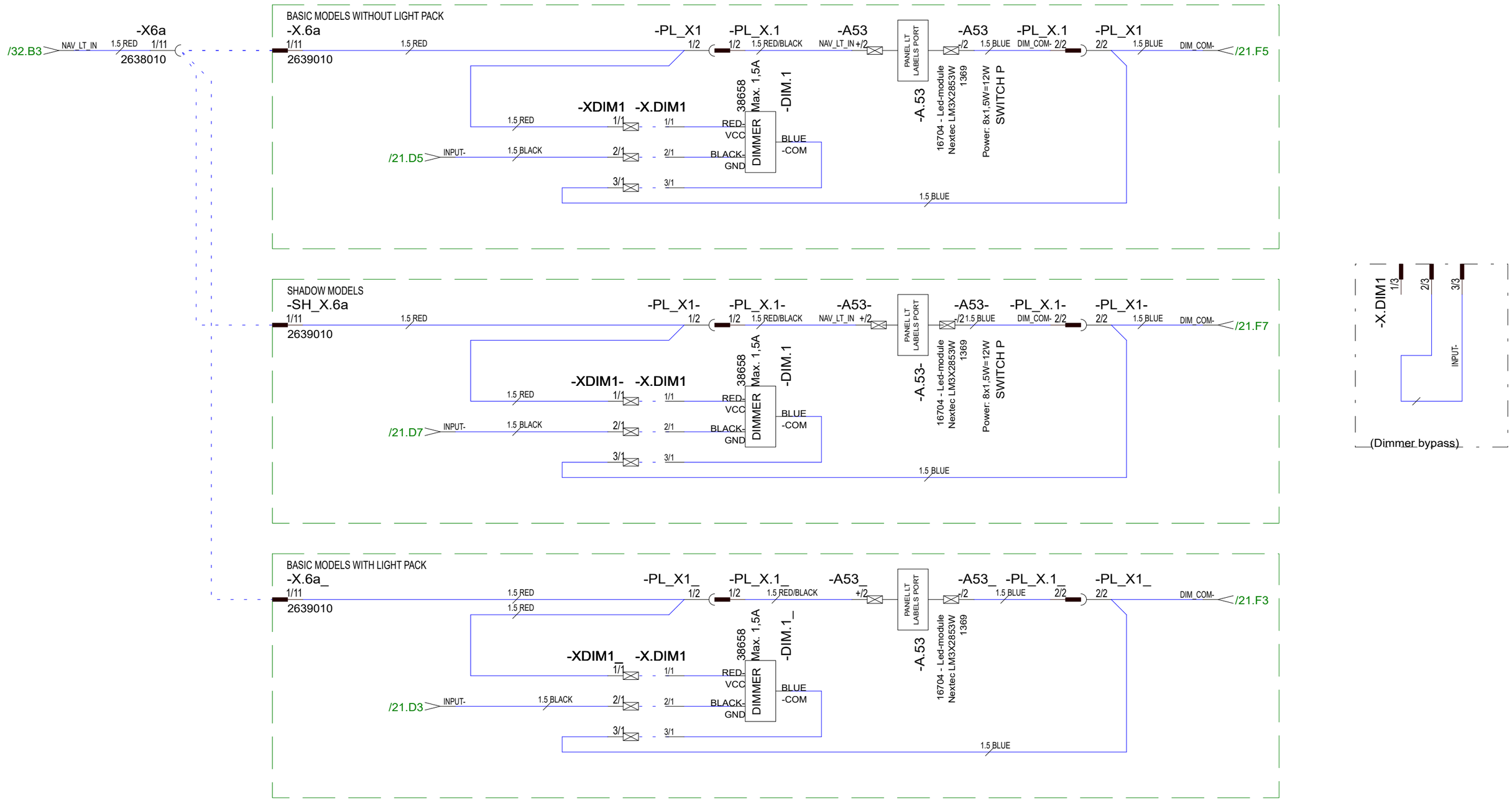

10.10.2023	PF	F22: 2004916; Not modified	Date	14.1.2019	NAVIX designed solutions	Axopar		
20.2.2024	PF	G23; 2005054; Logo lt supply ->deck lt, panel lt switch repl. with dimmer	Drawing by	TuM		Boat	Sub-product code	Product code / Project ID
18.6.2024	PF	G24: 2005139; Not modified	Sheet rev.	24		37 MY20	PANEL LIGHTS - DIAGRAM	HL
Date of modification	Modified by	Description	Project rev.	G	Copyright by	Boat model	Title	Loc / Sheet 33 / 210

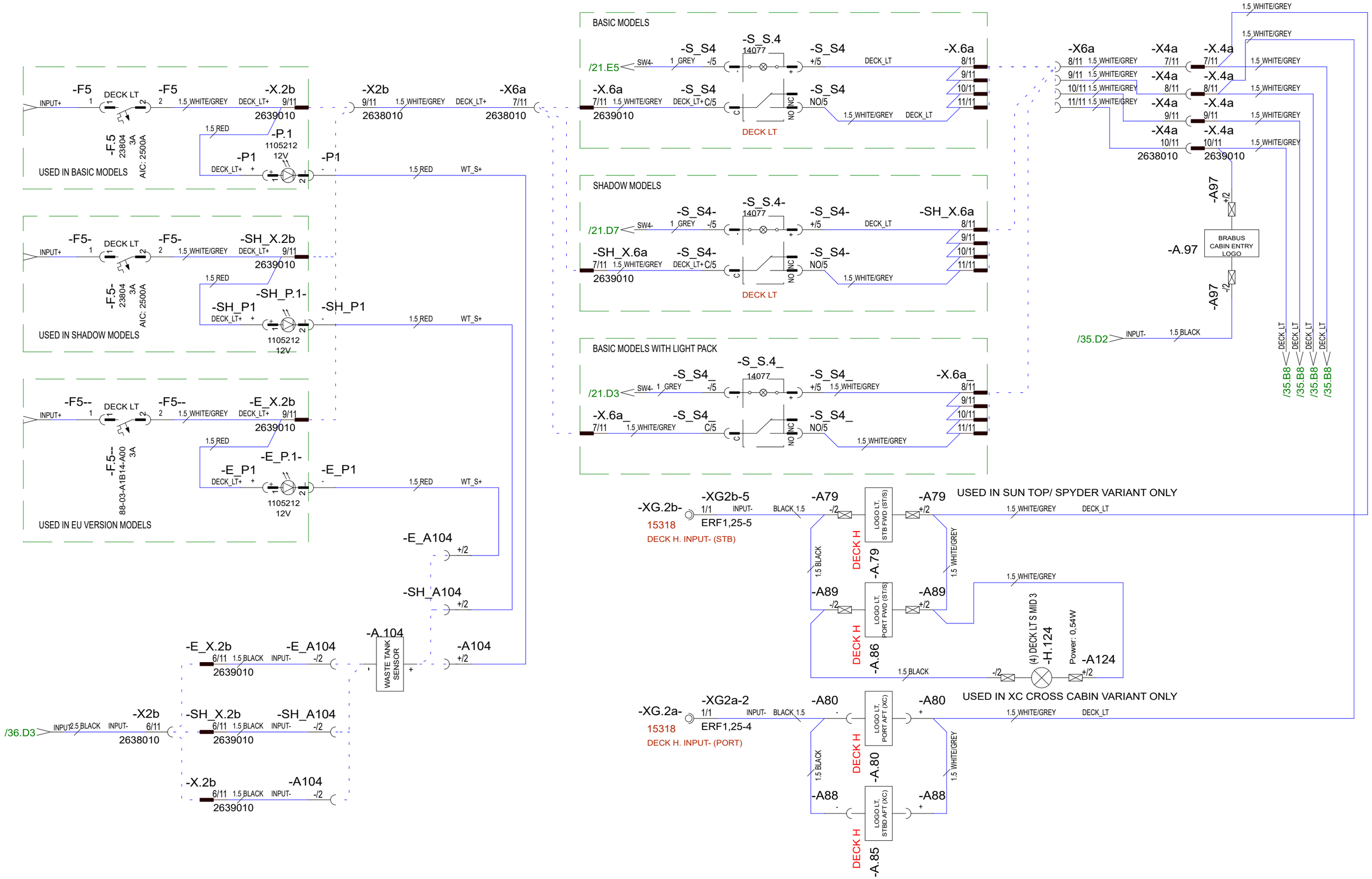

10.10.2023	PF	F22: 2004916; Not modified	Date	14.1.2019	NAVIX designed solutions	Axopar		
20.2.2024	PF	G23; 2005054; Logo lts moved to deck lts	Drawing by	TuM		Boat	Sub-product code	Product code	Project ID
18.6.2024	PF	G24: 2005139; Not modified	Sheet rev.	24		37 MY20	DECK LIGHT, LOGO LIGHT - DIAGRAM	HL	34 / 210
Date of modification	Modified by	Description	Project rev.	G	Copyright by	Boat model	Title	Loc	Sheet

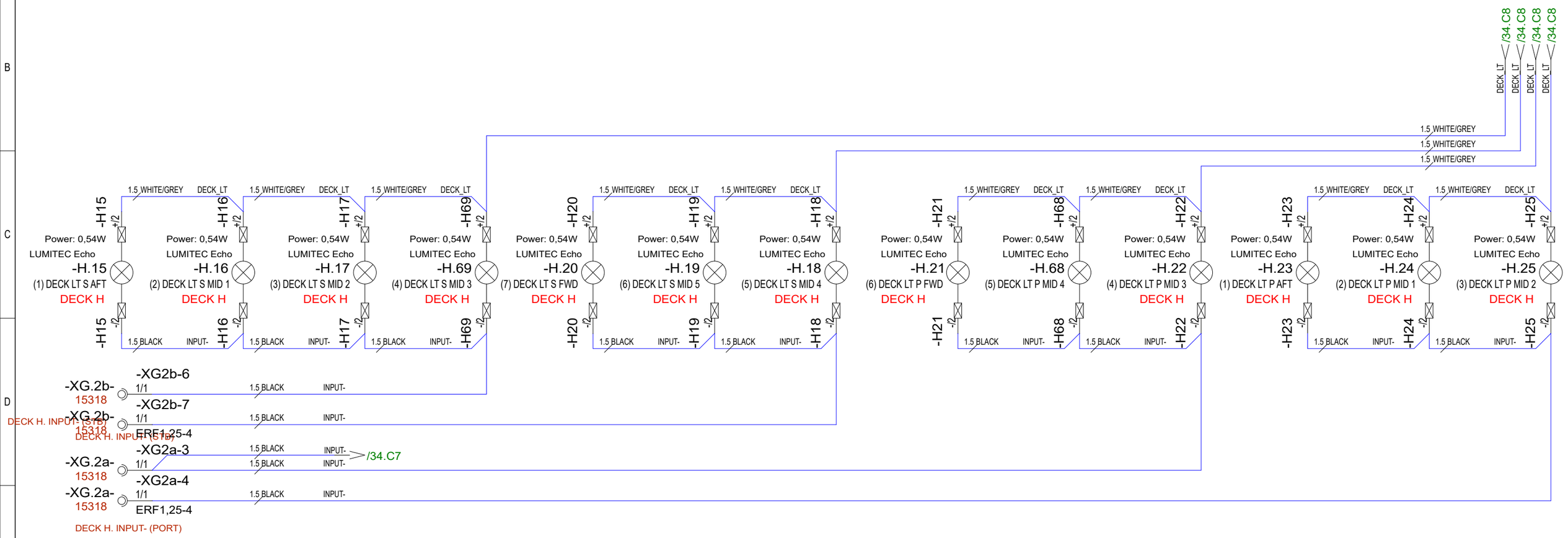

10.10.2023	PF	F22: 2004916; Not modified	Date	14.1.2019	NAVIX designed solutions	Axopar			
20.2.2024	PF	G23; 2005054; Not modified	Drawing by	TuM		Boat	Sub-product code	Product code	Project ID
18.6.2024	PF	G24: 2005139; Not modified	Sheet rev.	24		37 MY20	DECK LIGHT - DIAGRAM	HL	35 / 210
Date of modification	Modified by	Description	Project rev.	G	Copyright by	Boat model	Title	Loc	Sheet

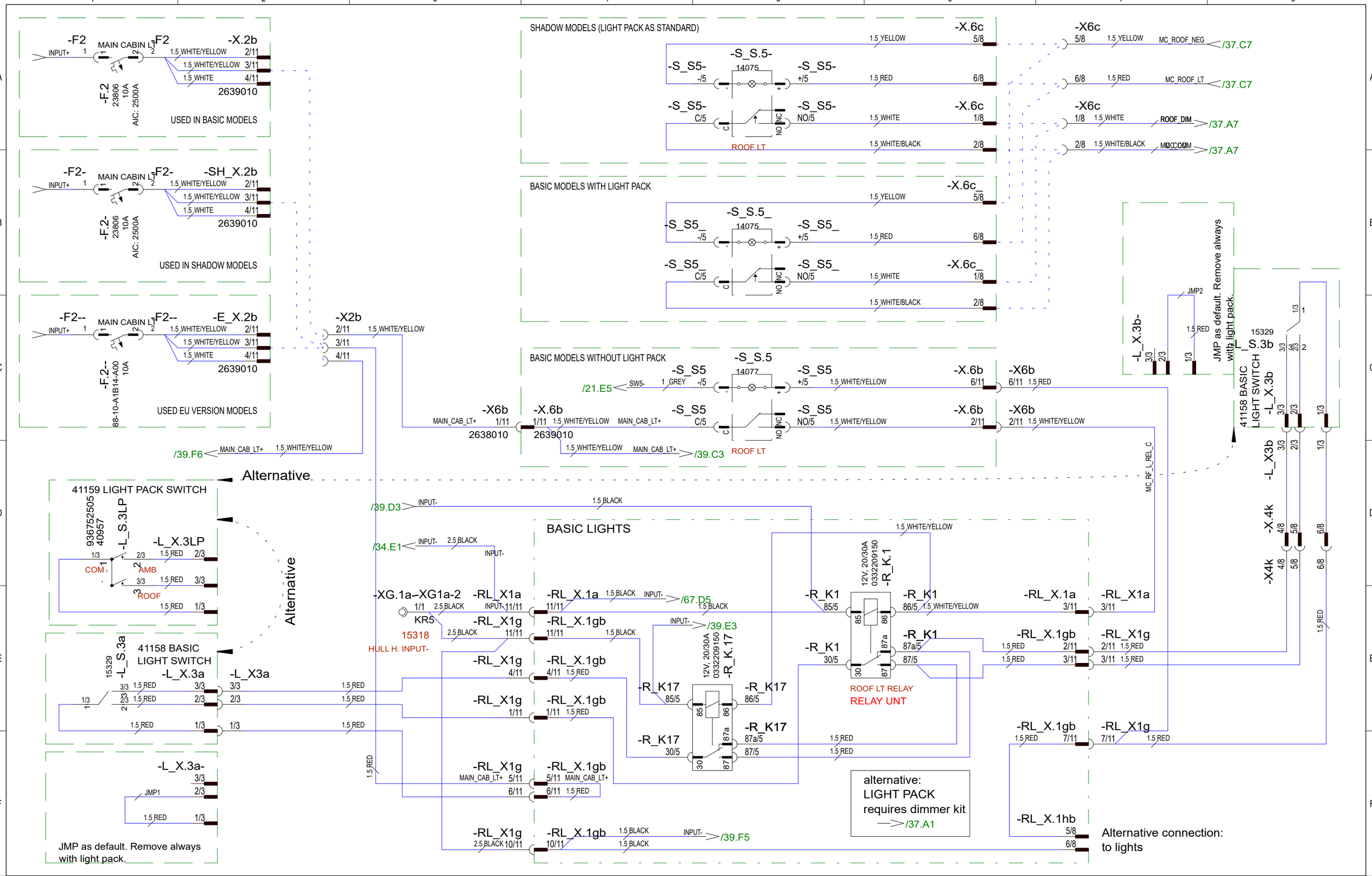

10.10.2023	PF	F22: 2004916; Not modified	Date	14.1.2019	NAVIX designed solutions	Axopar		
12.3.2024	PF	G23; 2005054; Added LX3 switches & R_K17, LP option built, S5->mom	Drawing by	TuM		Boat	Sub-product code	Product code / Project ID
18.6.2024	PF	G24: 2005139; Added jump connectors	Sheet rev.	24		37 MY20	MAIN CABIN LIGHT, SPOT - DIAGRAM	HL
Date of modification	Modified by	Description	Project rev.	G	Copyright by	Boat model	Title	Loc / Sheet 36 / 210

BASIC LIGHTS
/36.F6
/39.F4

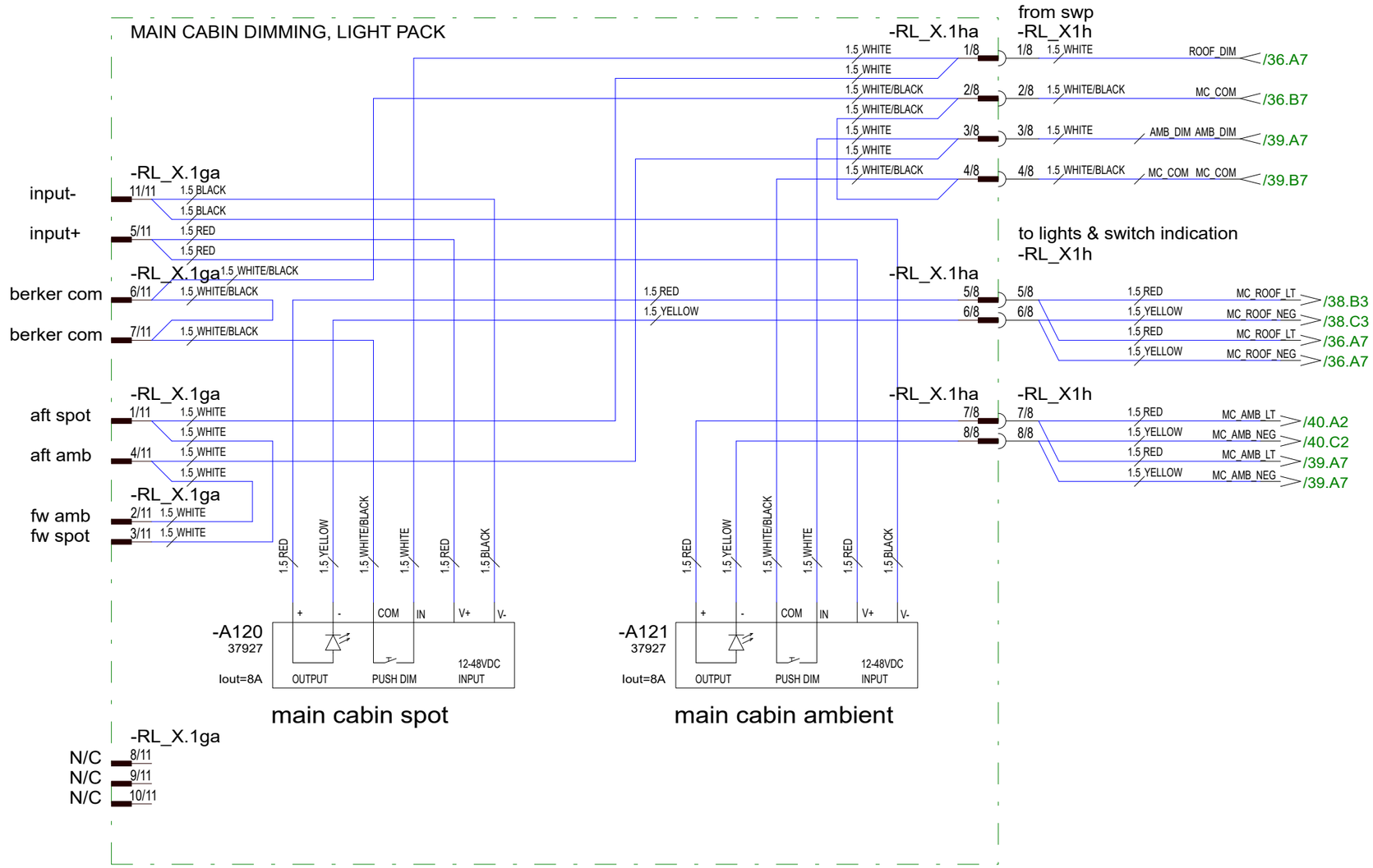

			Date 12.3.2024	NAVIX designed solutions	Axopar			
20.2.2024	PF	G23; 2005054; New sheet	Drawing by PF		Boat	Sub-product code	Product code	Project ID
18.6.2024	PF	G24: 2005139; Not modified	Sheet rev. 24		37 MY20 SHADOW	MAIN CABIN DIMMERS - DIAGRAM	HL	37 / 210
Date of modification	Modified by	Description	Project rev. G	Copyright by	Boat model	Title	Loc	Sheet

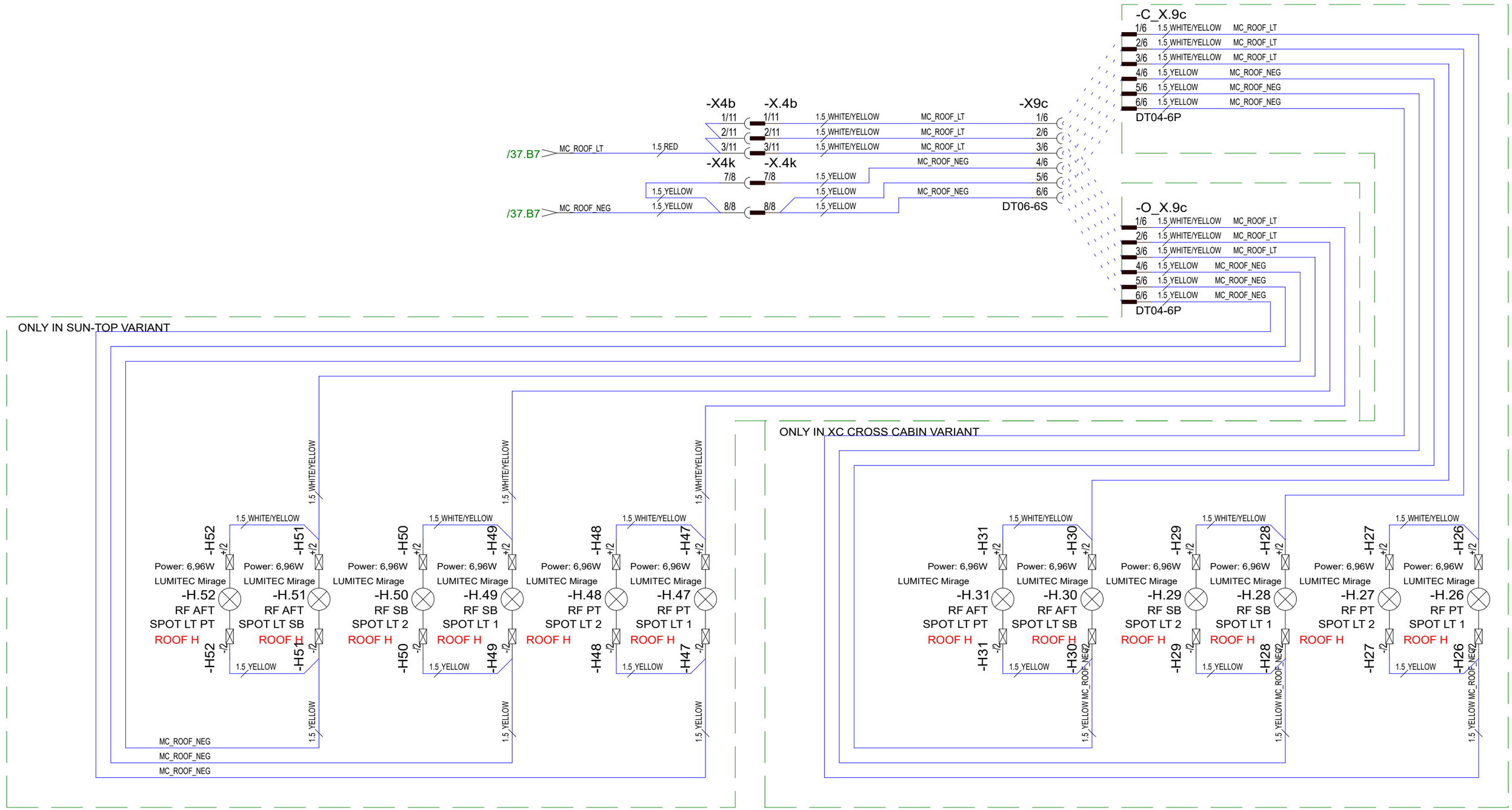

10.10.2023	PF	F22: 2004916; Not modified	Date	20.4.2020	NAVIX designed solutions	Axopar		
20.2.2024	PF	G23; 2005054; Light return paths modified	Drawing by	TuM		Boat	Sub-product code	Product code	Project ID
18.6.2024	PF	G24: 2005139; Not modified	Sheet rev.	24		37 MY20	MAIN CABIN LIGHT, SPOT - DIAGRAM	HL	38 / 210
Date of modification	Modified by	Description	Project rev.	G	Copyright by	Boat model	Title	Loc	Sheet

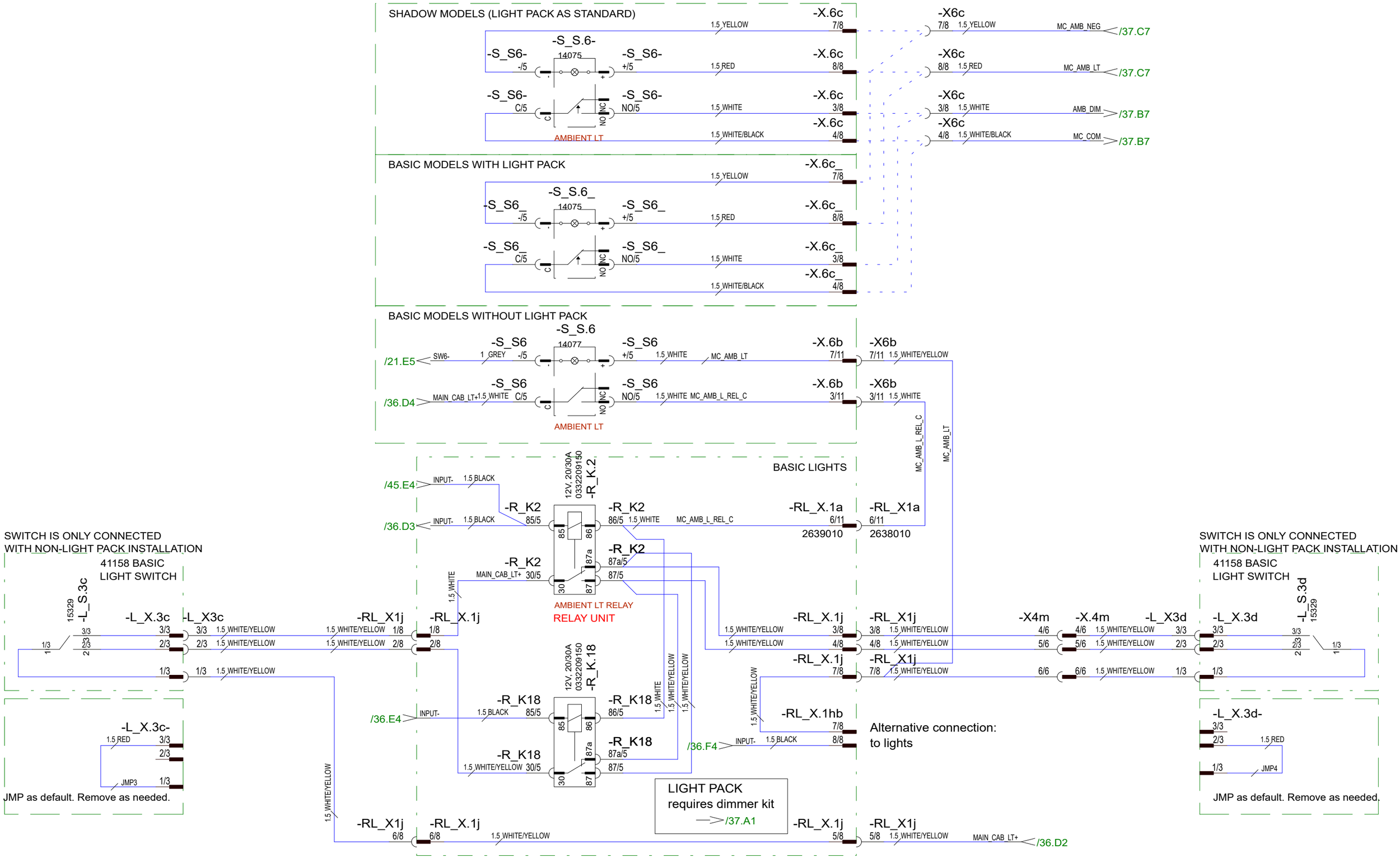

10.10.2023	PF	F22: 2004916; Not modified	Date	14.1.2019	NAVIX designed solutions	Axopar		
20.2.2024	PF	G23; 2005054; Added LX3 switches & R_K18, LP option built, S6->mom	Drawing by	TuM		Boat	Sub-product code	Product code	Project ID
18.6.2024	PF	G24: 2005139; Added jump connectors	Sheet rev.	24		37 MY20	MAIN CABIN LIGHT, AMBIENT - DIAGRAM	HL	39 / 210
Date of modification	Modified by	Description	Project rev.	G	Copyright by	Boat model	Title	Loc	Sheet

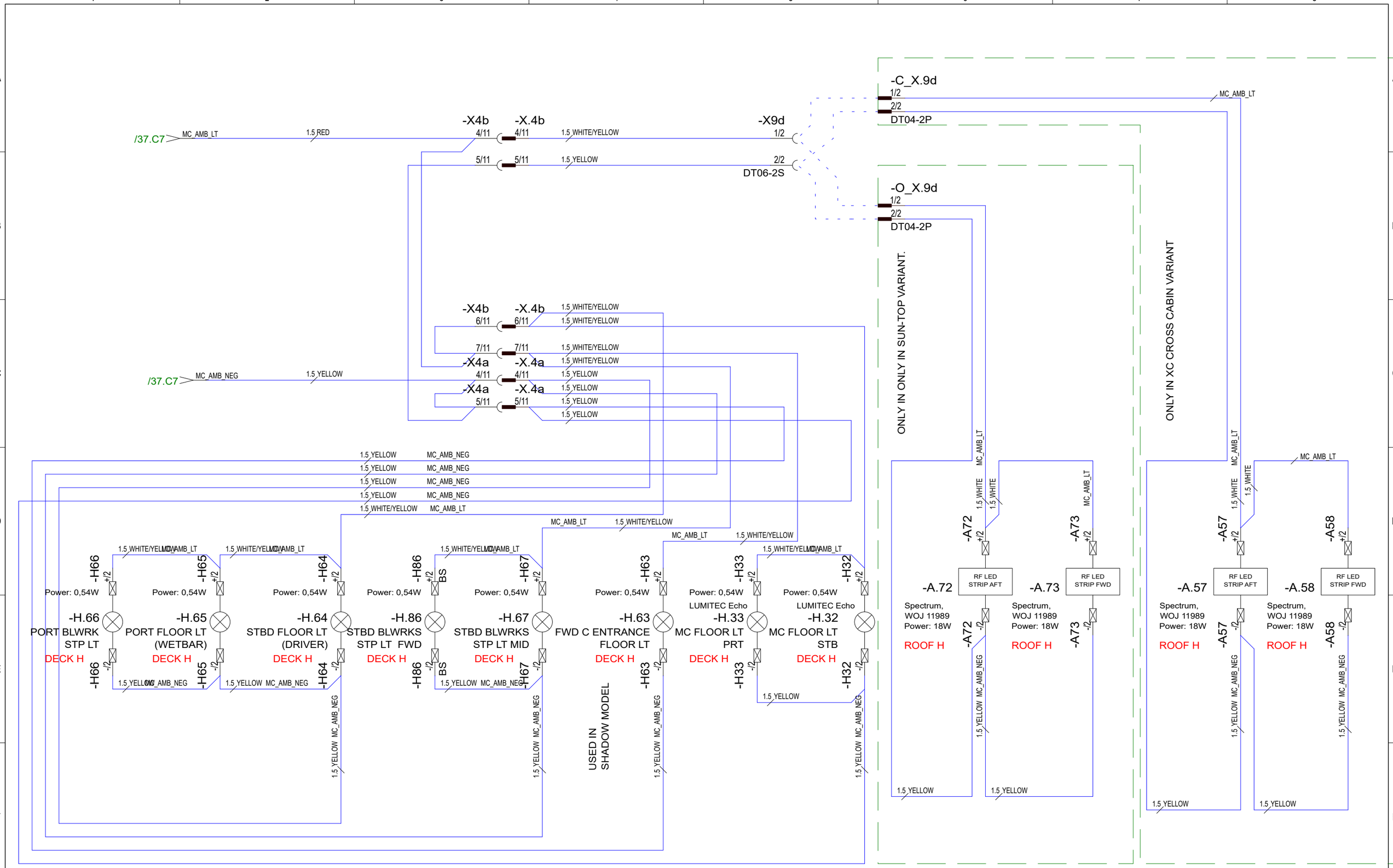

10.10.2023	PF	F22: 2004916; Not modified	Date	20.4.2020	NAVIX designed solutions	Axopar		
20.2.2024	PF	G23; 2005054; Light return paths modified	Drawing by	TuM		Boat	Sub-product code	Product code / Project ID
18.6.2024	PF	G24: 2005139; Not modified	Sheet rev.	24		37 MY20	MAIN CABIN LIGHT, AMBIENT - DIAGRAM	HL
Date of modification	Modified by	Description	Project rev.	G	Copyright by	Boat model	Title	Loc / Sheet 40 / 210

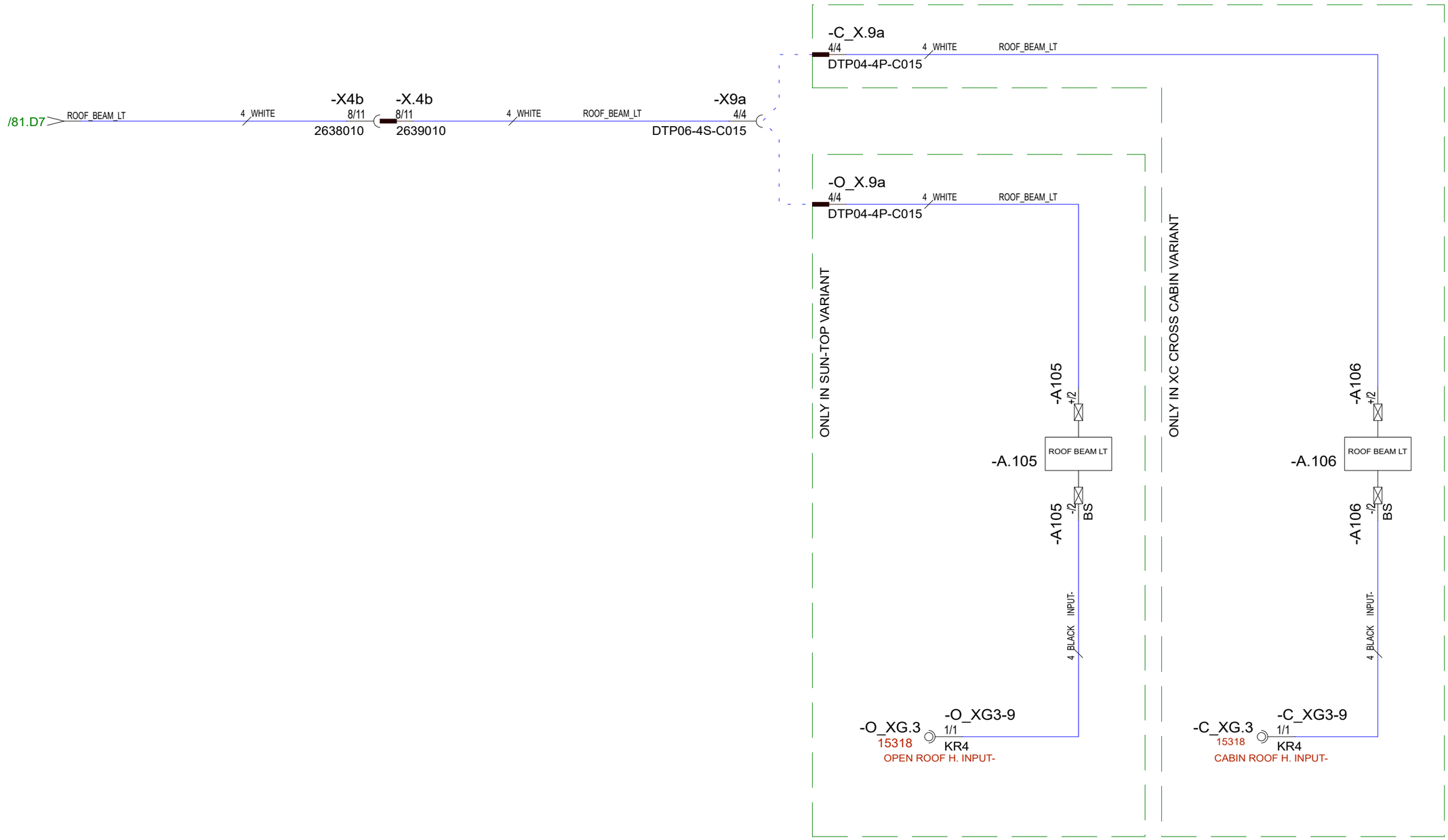

10.10.2023	PF	F22: 2004916; Not modified	Date	30.03.2021	NAVIX designed solutions	Axopar			
20.2.2024	PF	G23; 2005054; Not modified	Drawing by	TT		Boat	Sub-product code	Product code	Project ID
18.6.2024	PF	G24: 2005139; Not modified	Sheet rev.	24		37 MY20	ROOF BEAM LIGHT - DIAGRAM	HL	41/ 210
Date of modification	Modified by	Description	Project rev.	G	Copyright by	Boat model	Title	Loc	Sheet

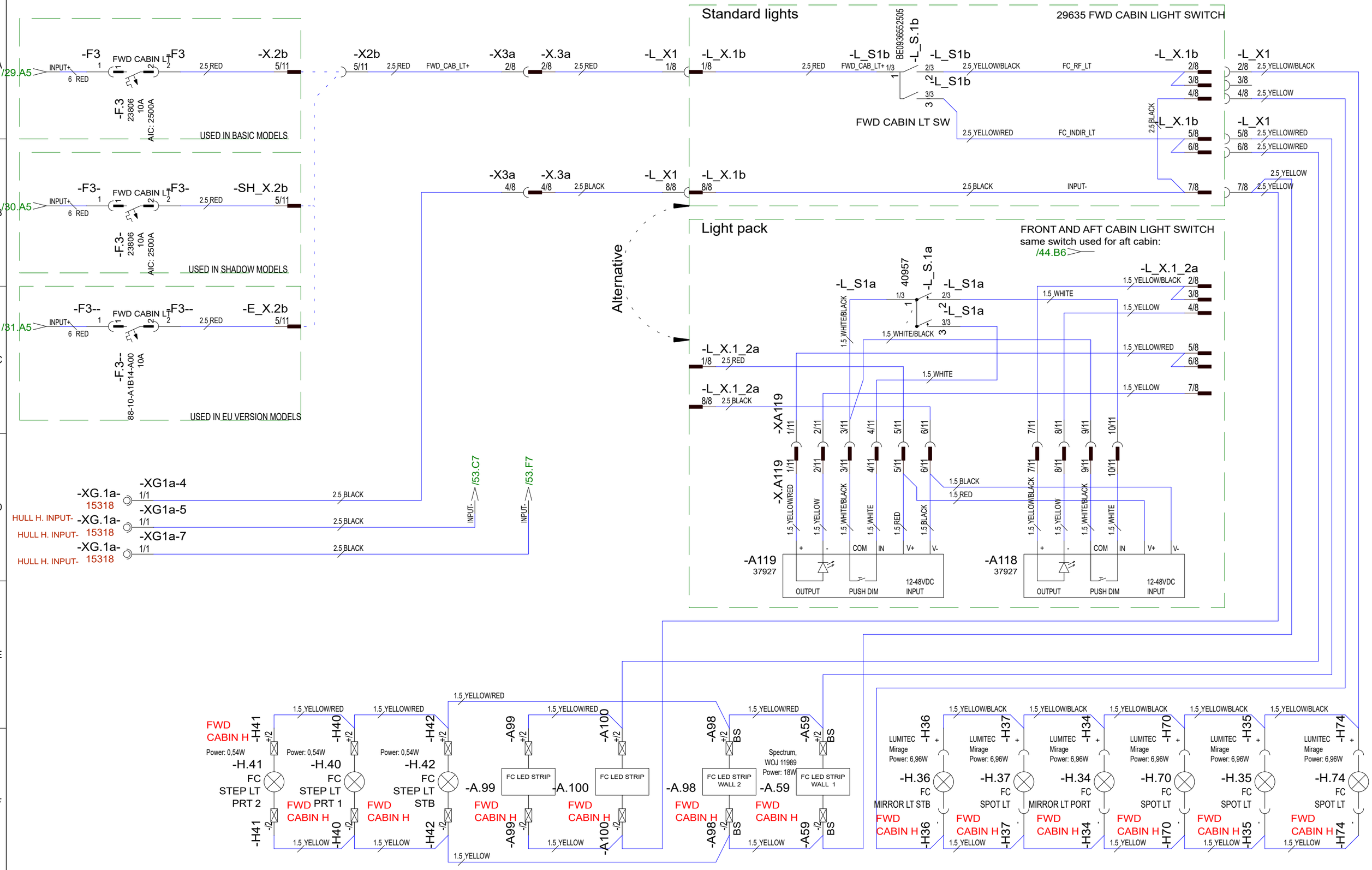

10.10.2023	PF	F22: 2004916; Not modified	Date	14.1.2019	NAVIX designed solutions	Axopar		
20.2.2024	PF	G23; 2005054; Std switch modif., LP option built, light return paths modif.	Drawing by	TuM		Boat	Sub-product code	Product code	Project ID
18.6.2024	PF	G24: 2005139; F3 15A->10A	Sheet rev.	24		37 MY20	FWD CABIN LIGHTS - DIAGRAM	HL	42 / 210
Date of modification	Modified by	Description	Project rev.	G	Copyright by	Boat model	Title	Loc	Sheet

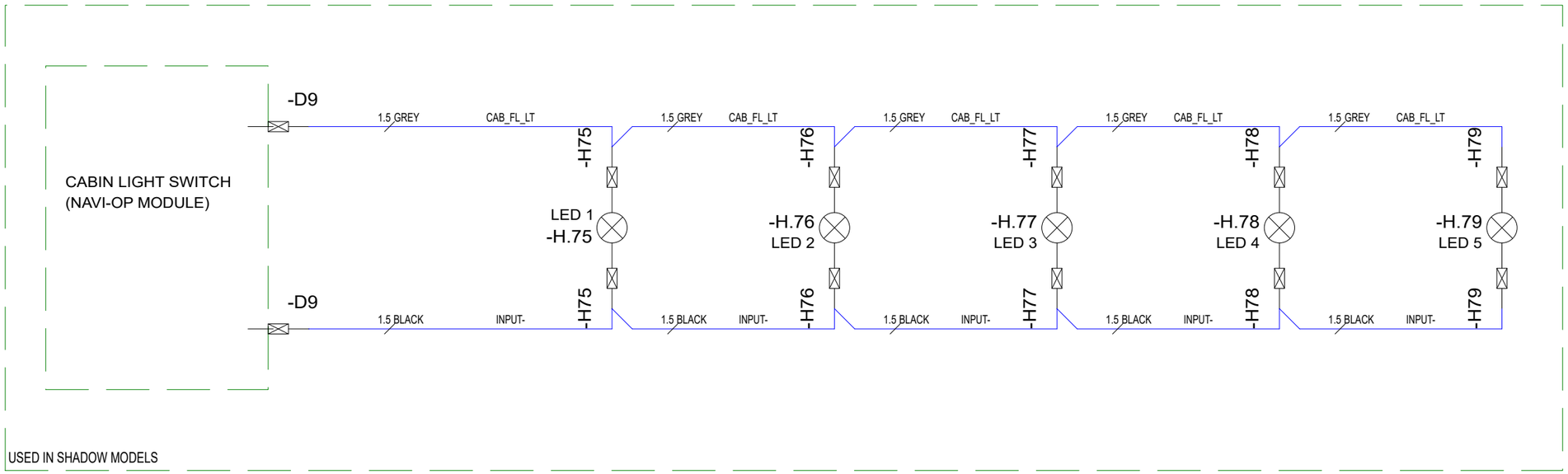

10.10.2023	PF	F22: 2004916; Not modified	Date	6.11.2020	NAVIX designed solutions	Axopar		
20.2.2024	PF	G23; 2005054; Not modified	Drawing by	TuM		Boat	Sub-product code	Product code / Project ID
18.6.2024	PF	G24: 2005139; Not modified	Sheet rev.	24		37 MY20	FWD CABIN FLOOR LIGHTS - DIAGRAM	HL
Date of modification	Modified by	Description	Project rev.	G	Copyright by	Boat model	Title	Loc / Sheet: 43 / 210

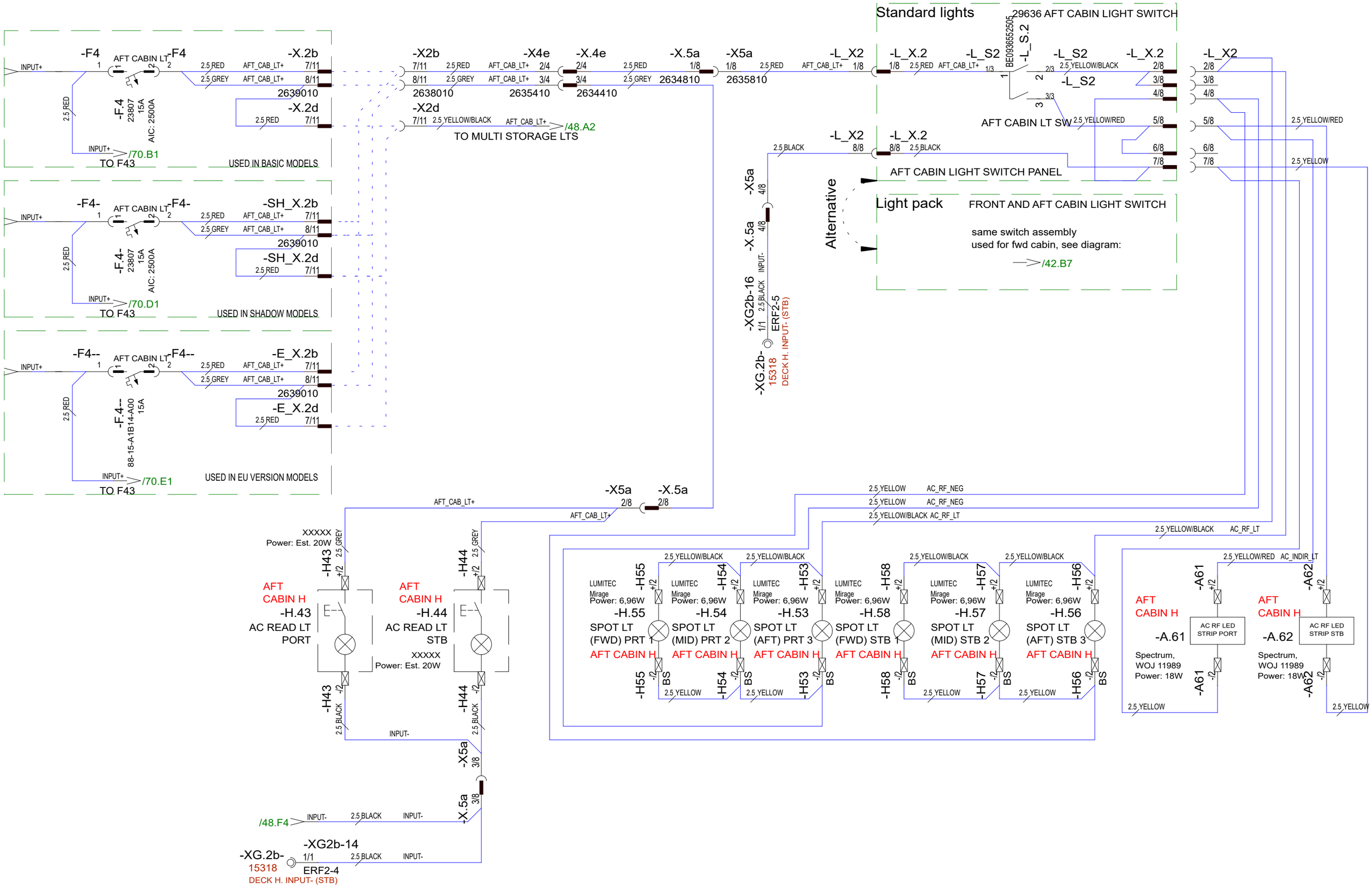

Date of modification	Modified by	Description
10.10.2023	PF	F22: 2004916; Not modified
20.2.2024	PF	G23; 2005054; Std switch modif., LP option built, light return paths modif.
18.6.2024	PF	G24: 2005139; Not modified

Date	14.1.2019
Drawing by	TuM
Sheet rev.	24
Project rev.	G

NAVIX designed solutions

Copyright by

Boat	Sub-product code	Product code	Project ID
Axopar			
Boat model: 37 MY20	Title: AFT CABING LIGHTS - DIAGRAM	Loc: HL	Sheet: 44 / 210

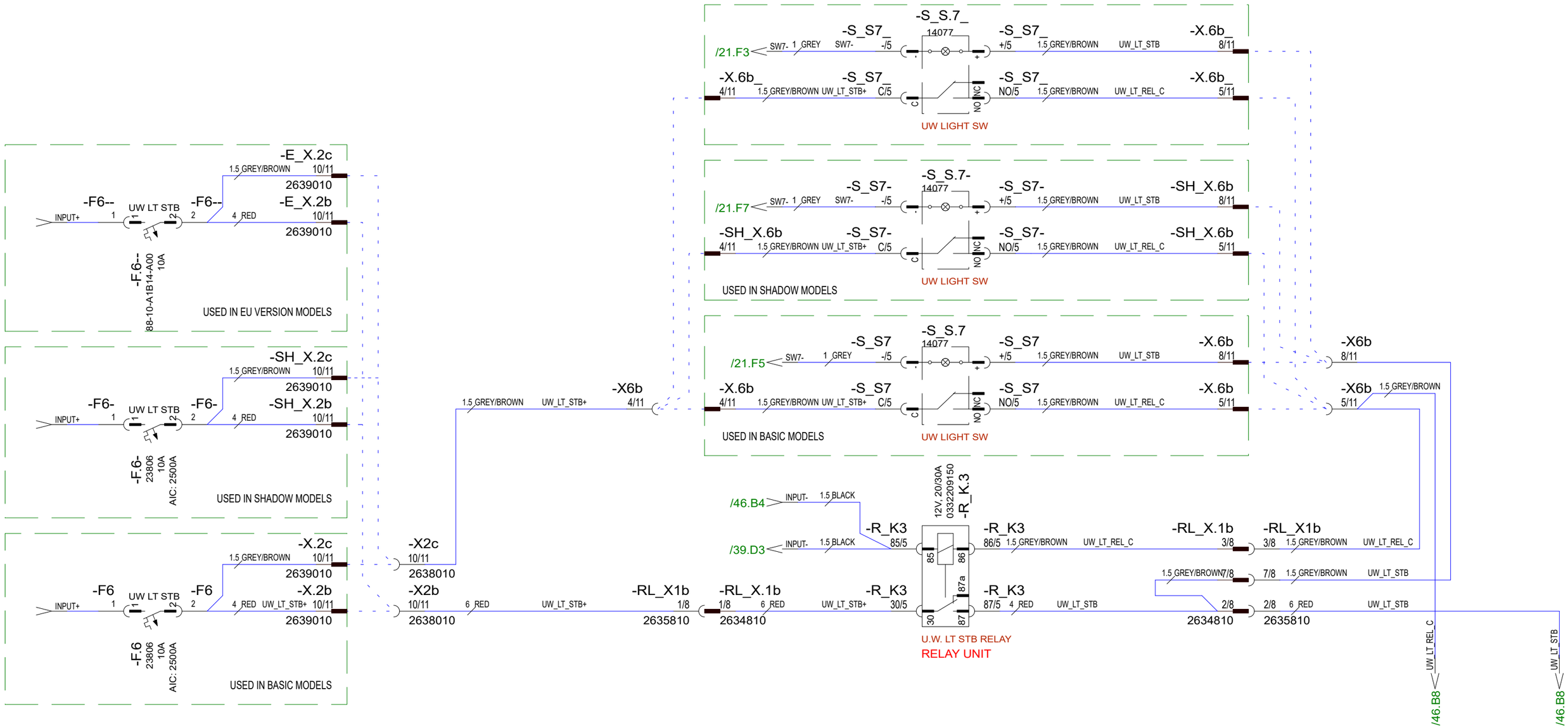

10.10.2023	PF	F22: 2004916; Not modified	Date	14.1.2019	NAVIX designed solutions	Axopar			
20.2.2024	PF	G23; 2005054; LP swp added	Drawing by	TuM		Boat	Sub-product code	Product code	Project ID
18.6.2024	PF	G24: 2005139; Not modified	Sheet rev.	24		37 MY20	UNDER WATER LT - DIAGRAM	HL	45 / 210
Date of modification	Modified by	Description	Project rev.	G	Copyright by	Boat model	Title	Loc	Sheet

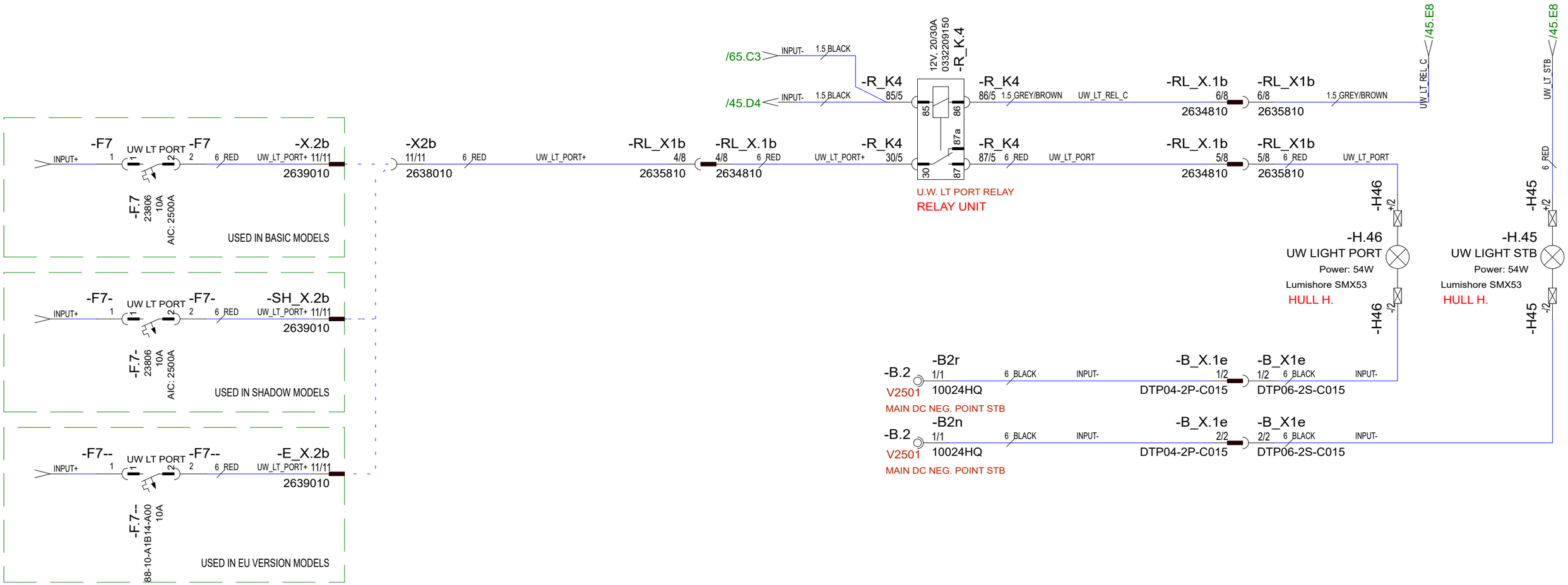

Date of modification	Modified by	Description
10.10.2023	PF	F22: 2004916; Not modified
20.2.2024	PF	G23; 2005054; Not modified
18.6.2024	PF	G24: 2005139; Not modified

Date	14.1.2019
Drawing by	TuM
Sheet rev.	24
Project rev.	G

NAVIX designed solutions

Copyright by

Boat	Sub-product code	Product code	Project ID
Axopar			
Boat model: 37 MY20	Title: UNDER WATER LT - DIAGRAM	Loc: HL	Sheet: 46 / 210

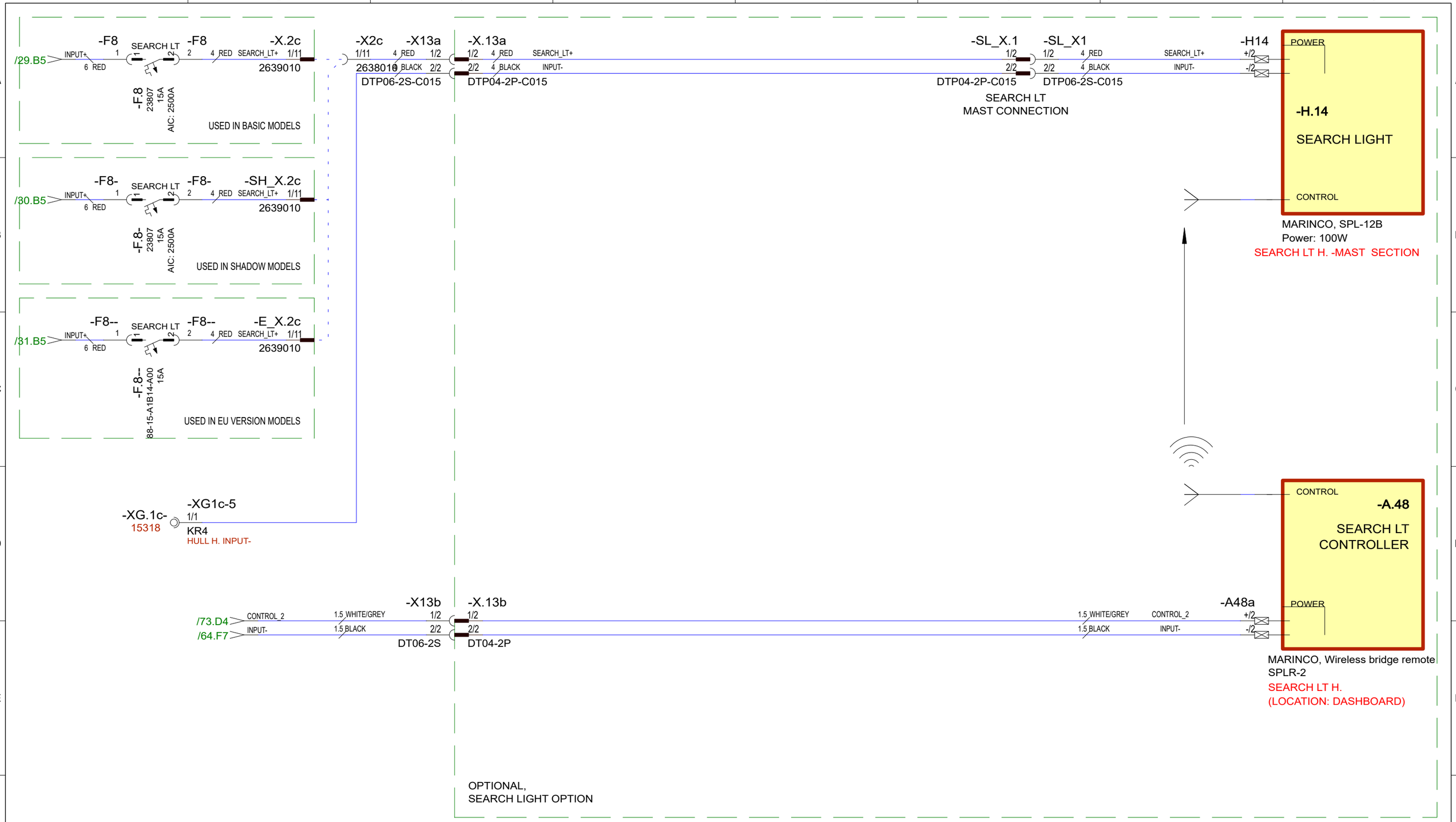

10.10.2023	PF	F22: 2004916; Not modified	Date	14.1.2019	NAVIX designed solutions	Axopar		
20.2.2024	PF	G23; 2005054; Not modified	Drawing by	TuM		Boat	Sub-product code	Product code / Project ID
18.6.2024	PF	G24: 2005139; Not modified	Sheet rev.	24		37 MY20	SEARCH LIGHT - DIAGRAM	HL
Date of modification	Modified by	Description	Project rev.	G	Copyright by	Boat model	Title	Loc / Sheet 47 / 210

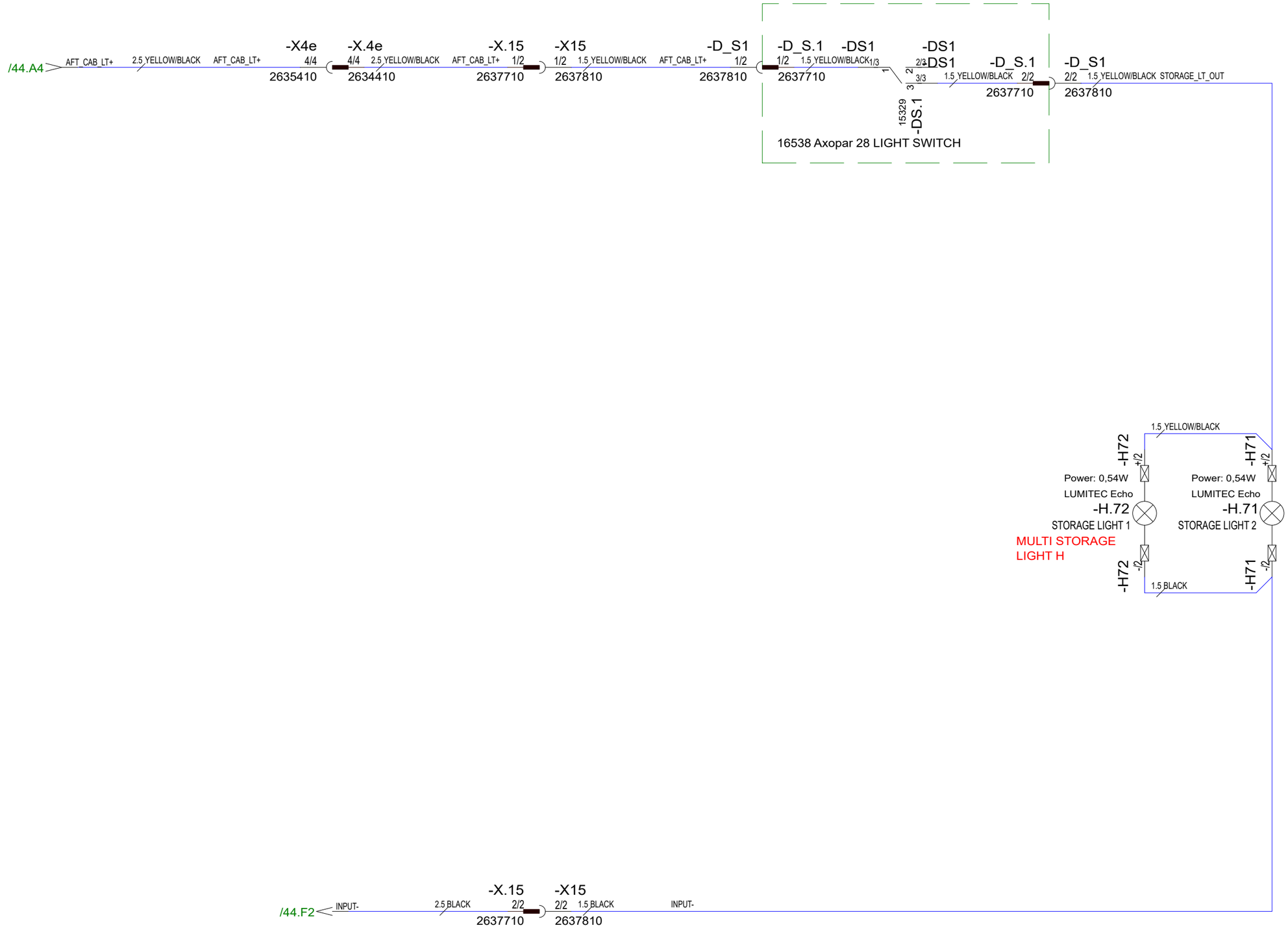

10.10.2023	PF	F22: 2004916; Not modified	Date	6.4.2020	NAVIX designed solutions	Axopar		
20.2.2024	PF	G23; 2005054; Not modified	Drawing by	TuM		Boat	Sub-product code	Product code / Project ID
18.6.2024	PF	G24: 2005139; Not modified	Sheet rev.	24		37 MY20	MULTISTORAGE LIGHT - DIAGRAM	HL
Date of modification	Modified by	Description	Project rev.	G	Copyright by	Boat model	Title	Loc / Sheet 48 / 210

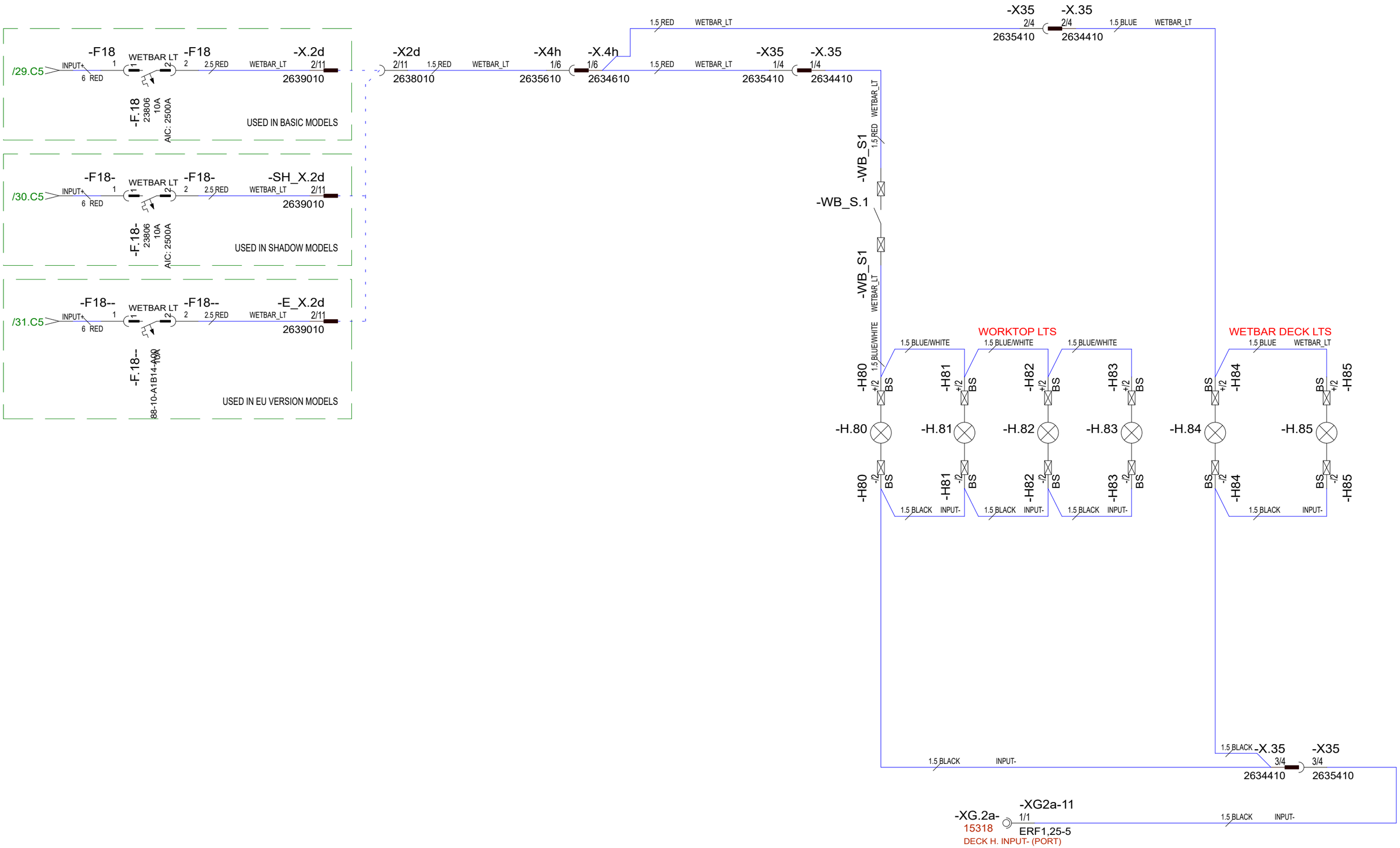

10.10.2023	PF	F22: 2004916; Not modified	Date	6.2.2023	NAVIX designed solutions	Axopar		
20.2.2024	PF	G23; 2005054; Not modified	Drawing by	TT		Boat	Sub-product code	Product code	Project ID
18.6.2024	PF	G24: 2005139; Not modified	Sheet rev.	24		37 MY20 SHADOW	WETBAR LIGHTS HARNESS	HL	49 / 210
Date of modification	Modified by	Description	Project rev.	G	Copyright by	Boat model	Title	Loc	Sheet

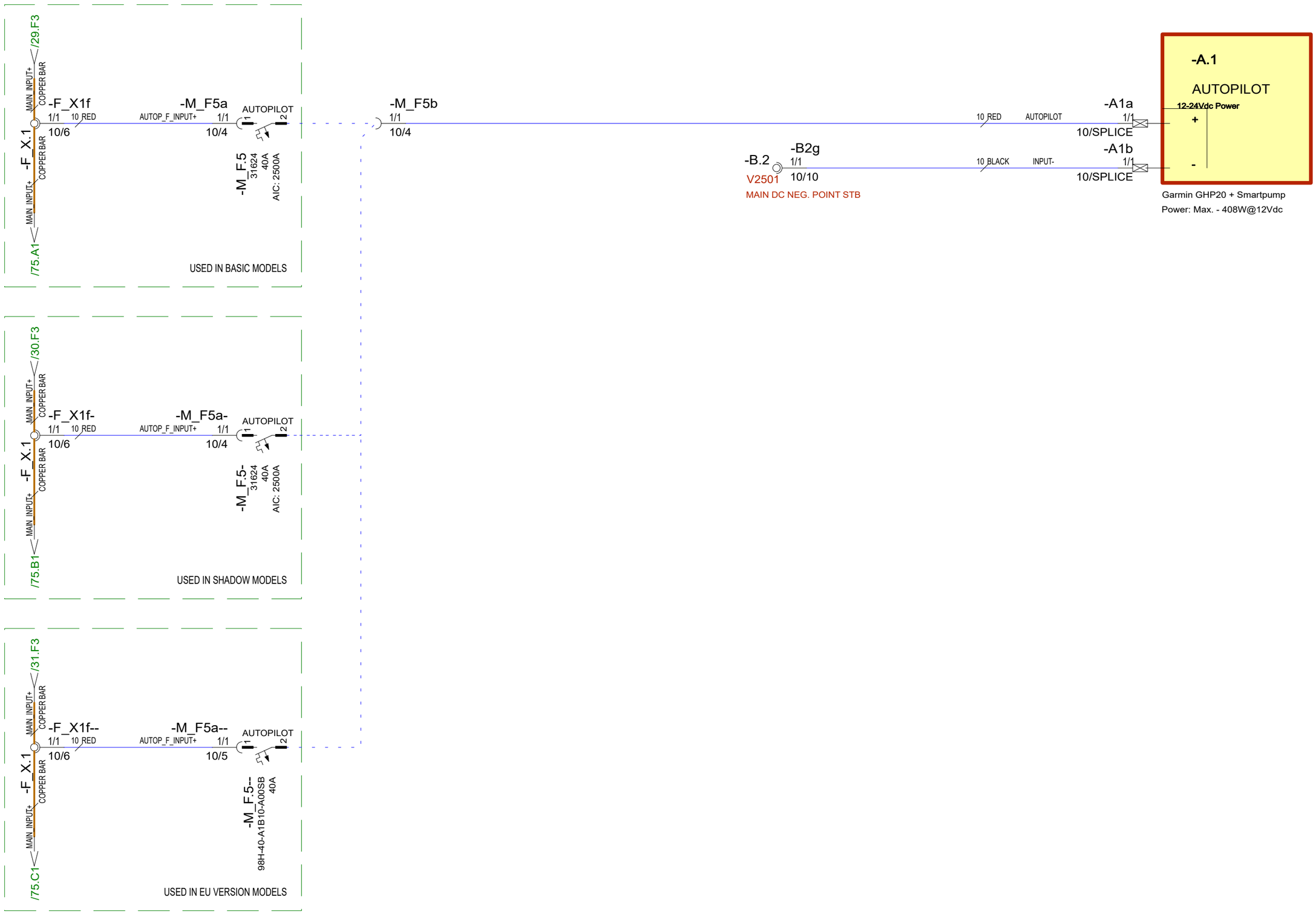

10.10.2023	PF	F22: 2004916; Not modified	Date	21.4.2020	NAVIX designed solutions	Axopar		
20.2.2024	PF	G23; 2005054; Not modified	Drawing by	TuM		Boat	Sub-product code	Product code / Project ID
18.6.2024	PF	G24: 2005139; Not modified	Sheet rev.	24		37 MY20	AUTOPILOT - DIAGRAM	HL
Date of modification	Modified by	Description	Project rev.	G	Copyright by	Boat model	Title	Loc / Sheet 50 / 210

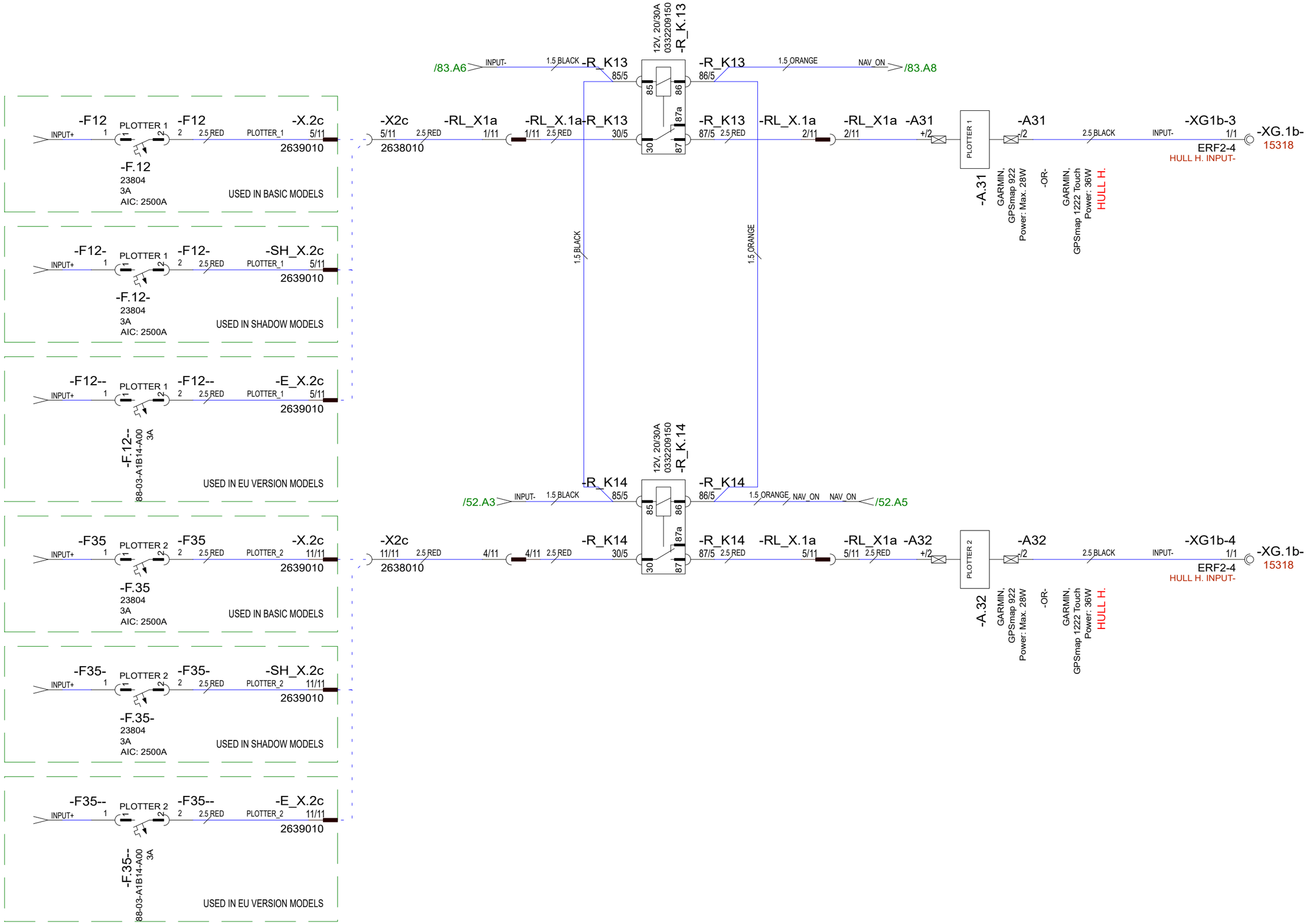

10.10.2023	PF	F22: 2004916; Not modified	Date	14.1.2019	NAVIX designed solutions	Axopar			
20.2.2024	PF	G23; 2005054; R_K13 & R_K14 added (nav on/off)	Drawing by	TuM		Boat	Sub-product code	Product code	Project ID
18.6.2024	PF	G24: 2005139; Not modified	Sheet rev.	24		37 MY20	NAV. EQUIPMENT - DIAGRAM	HL	51/ 210
Date of modification	Modified by	Description	Project rev.	G	Copyright by	Boat model	Title	Loc	Sheet

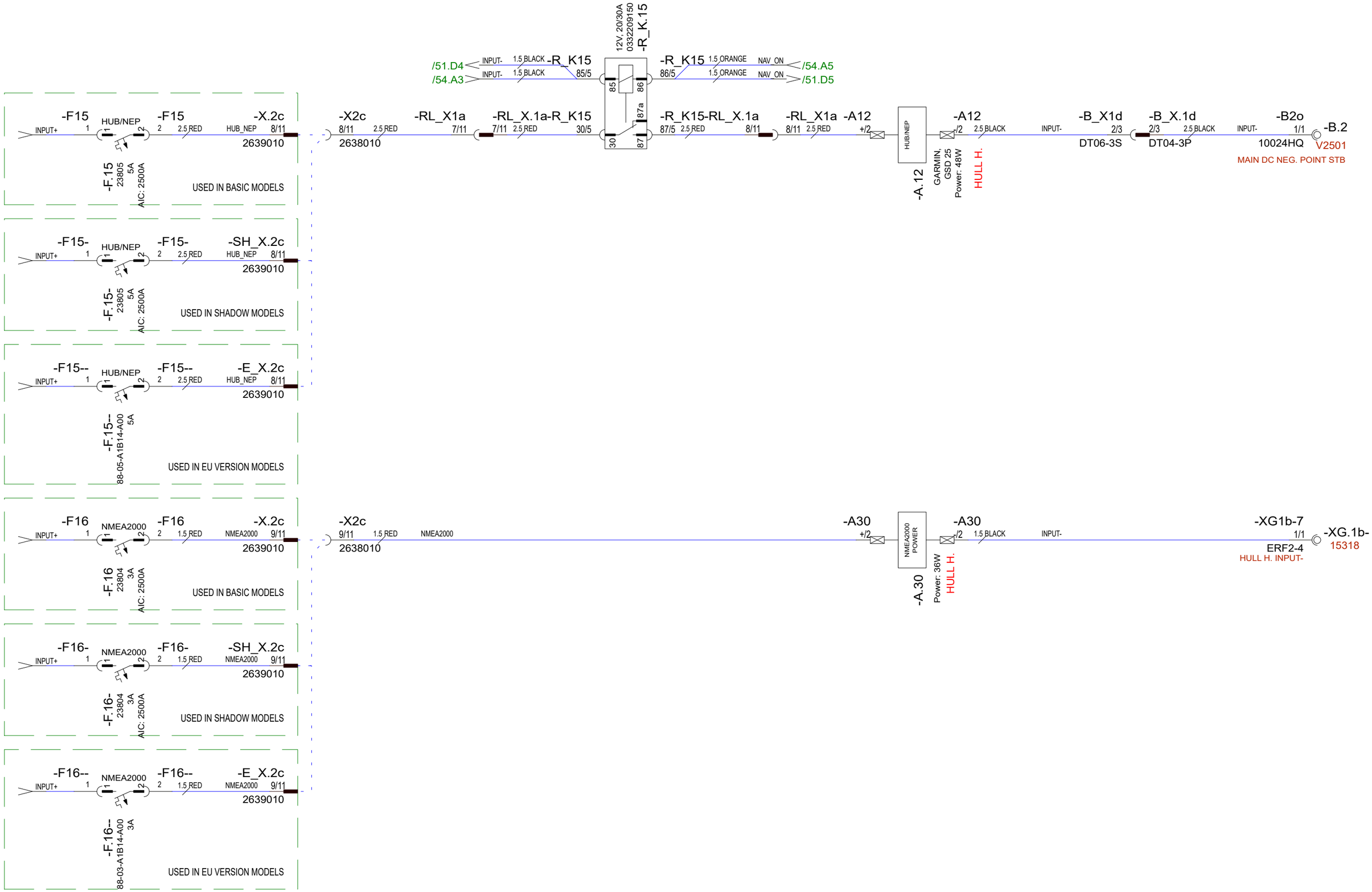

10.10.2023	PF	F22: 2004916; Not modified	Date	21.4.2020	NAVIX designed solutions	Axopar			
20.2.2024	PF	G23; 2005054; R_K15 added (nav on/off)	Drawing by	TuM		Boat	Sub-product code	Product code	Project ID
18.6.2024	PF	G24: 2005139; Not modified	Sheet rev.	24		37 MY20	NAV. EQUIPMENT - DIAGRAM	HL	52 / 210
Date of modification	Modified by	Description	Project rev.	G	Copyright by	Boat model	Title	Loc	Sheet

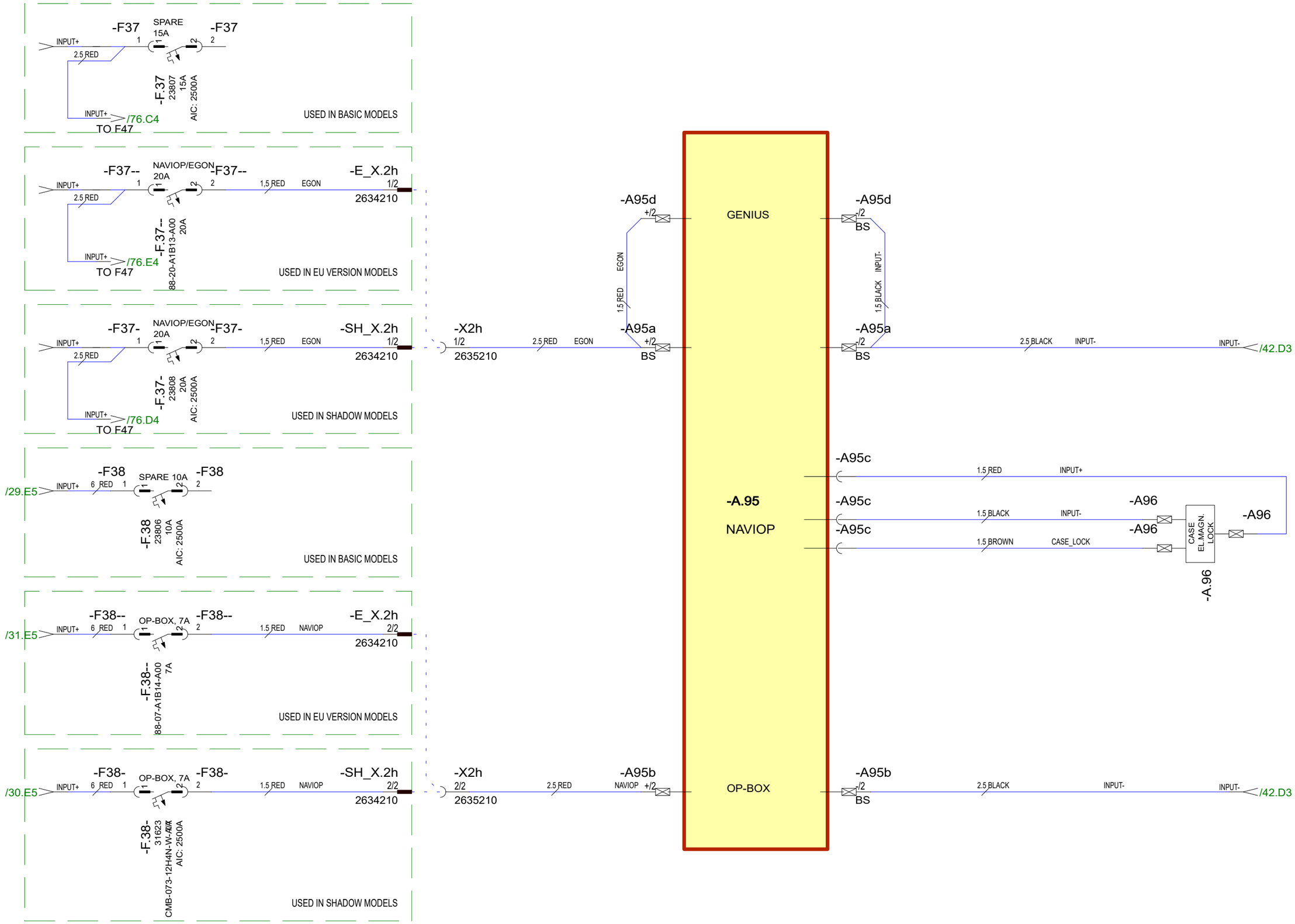

10.10.2023	PF	F22: 2004916; Not modified	Date	23.10.2020	NAVIX designed solutions	Axopar			
20.2.2024	PF	G23; 2005054; Not modified	Drawing by	TuM		Boat	Sub-product code	Product code	Project ID
18.6.2024	PF	G24: 2005139; Not modified	Sheet rev.	24		37 MY20	NAV. EQUIPMENT - DIAGRAM	HL	53 / 210
Date of modification	Modified by	Description	Project rev.	G	Copyright by	Boat model	Title	Loc	Sheet

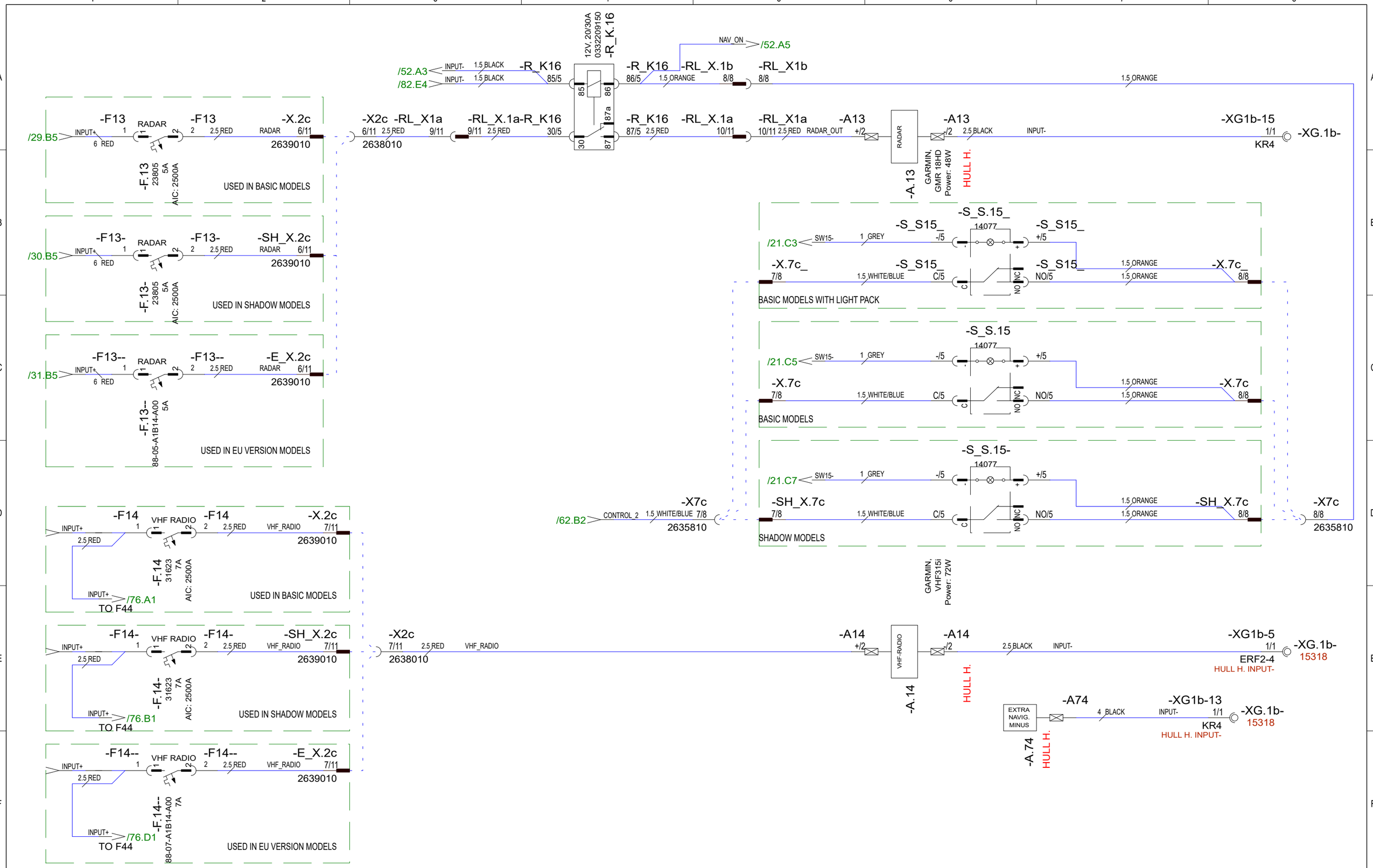

10.10.2023	PF	F22: 2004916; Not modified	Date	23.10.2020	NAVIX designed solutions	Axopar		
20.2.2024	PF	G23; 2005054; R_K16 and S15 added (nav on/off)	Drawing by	TuM		Boat	Sub-product code	Product code / Project ID
18.6.2024	PF	G24: 2005139; Not modified	Sheet rev.	24		37 MY20	NAV. EQUIPMENT - DIAGRAM	HL
Date of modification	Modified by	Description	Project rev.	G	Copyright by	Boat model	Title	Loc / Sheet 54 / 210

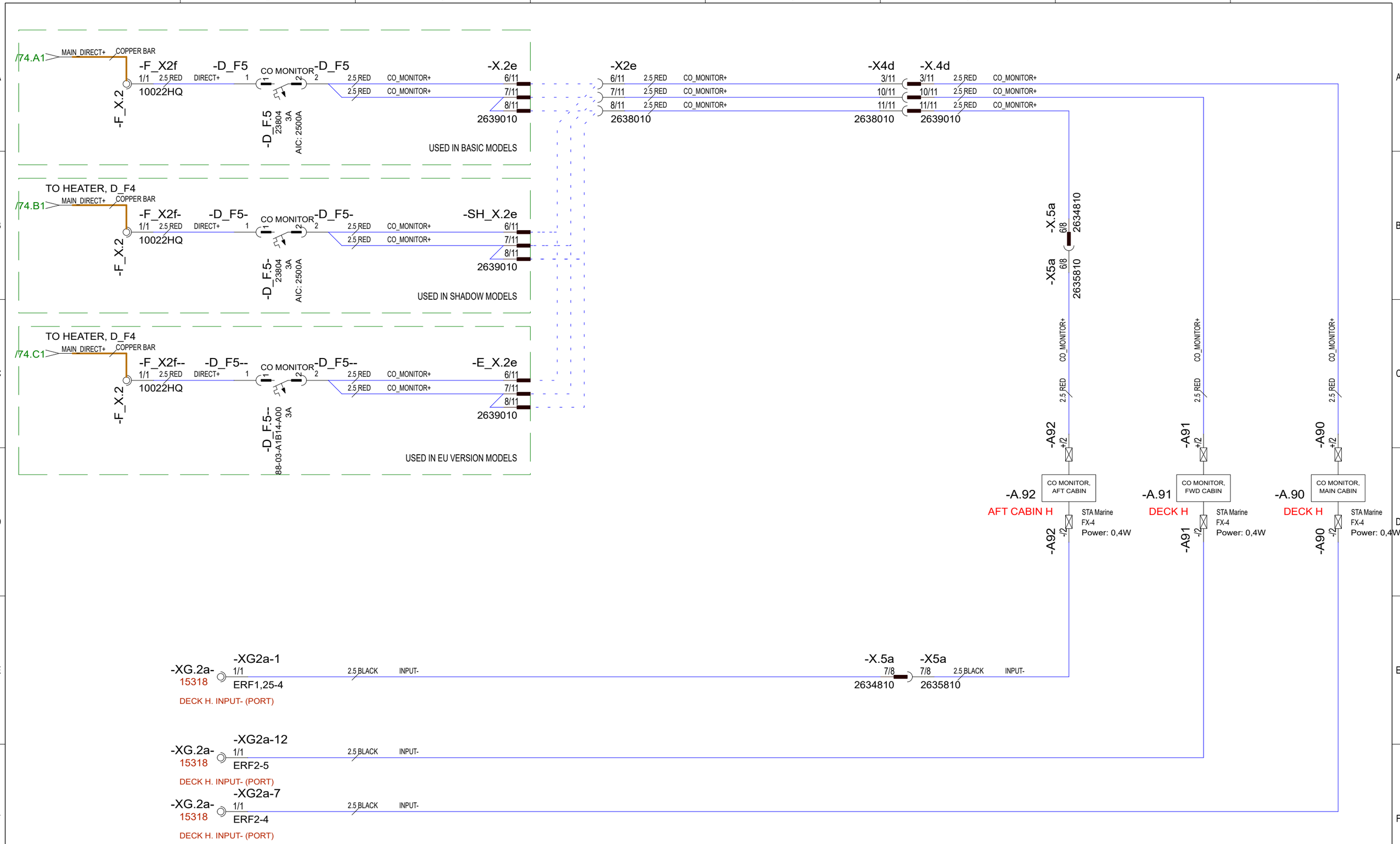

10.10.2023	PF	F22: 2004916; Not modified	Date	6.4.2020	NAVIX designed solutions	Axopar		
20.2.2024	PF	G23; 2005054; Not modified	Drawing by	TuM		Boat	Sub-product code	Product code / Project ID
18.6.2024	PF	G24: 2005139; Not modified	Sheet rev.	24		37 MY20	CO MONITORS - DIAGRAM	HL
Date of modification	Modified by	Description	Project rev.	G	Copyright by	Boat model	Title	Loc / Sheet 55 / 210

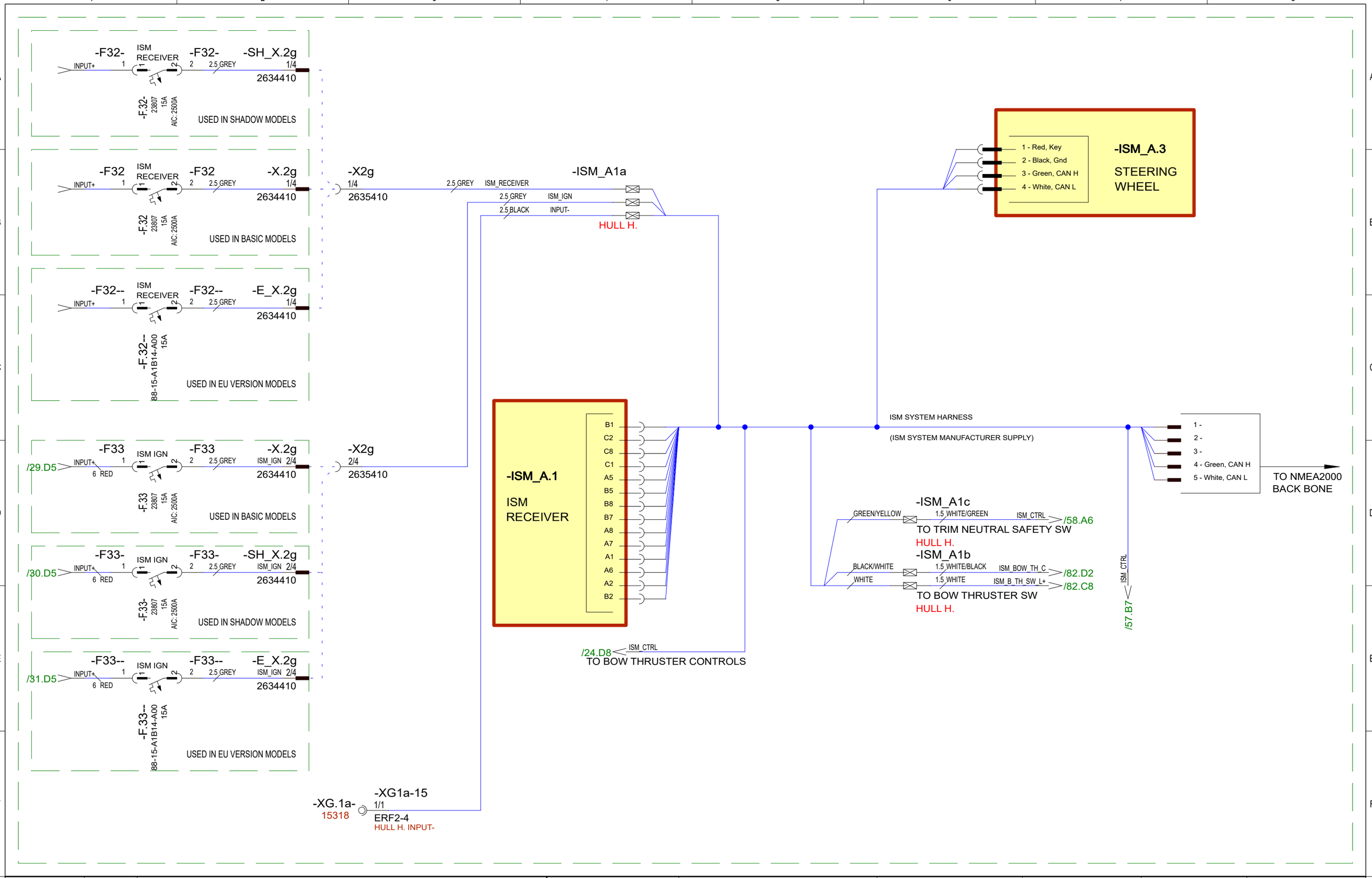

10.10.2023	PF	F22: 2004916; Not modified	Date	14.1.2019	NAVIX designed solutions	Axopar		
20.2.2024	PF	G23; 2005054; Not modified	Drawing by	TuM		Boat	Sub-product code	Product code	Project ID
18.6.2024	PF	G24: 2005139; Not modified	Sheet rev.	24		37 MY20	ISM SYSTEM - DIAGRAM	HL	56 / 210
Date of modification	Modified by	Description	Project rev.	G	Copyright by	Boat model	Title	Loc	Sheet

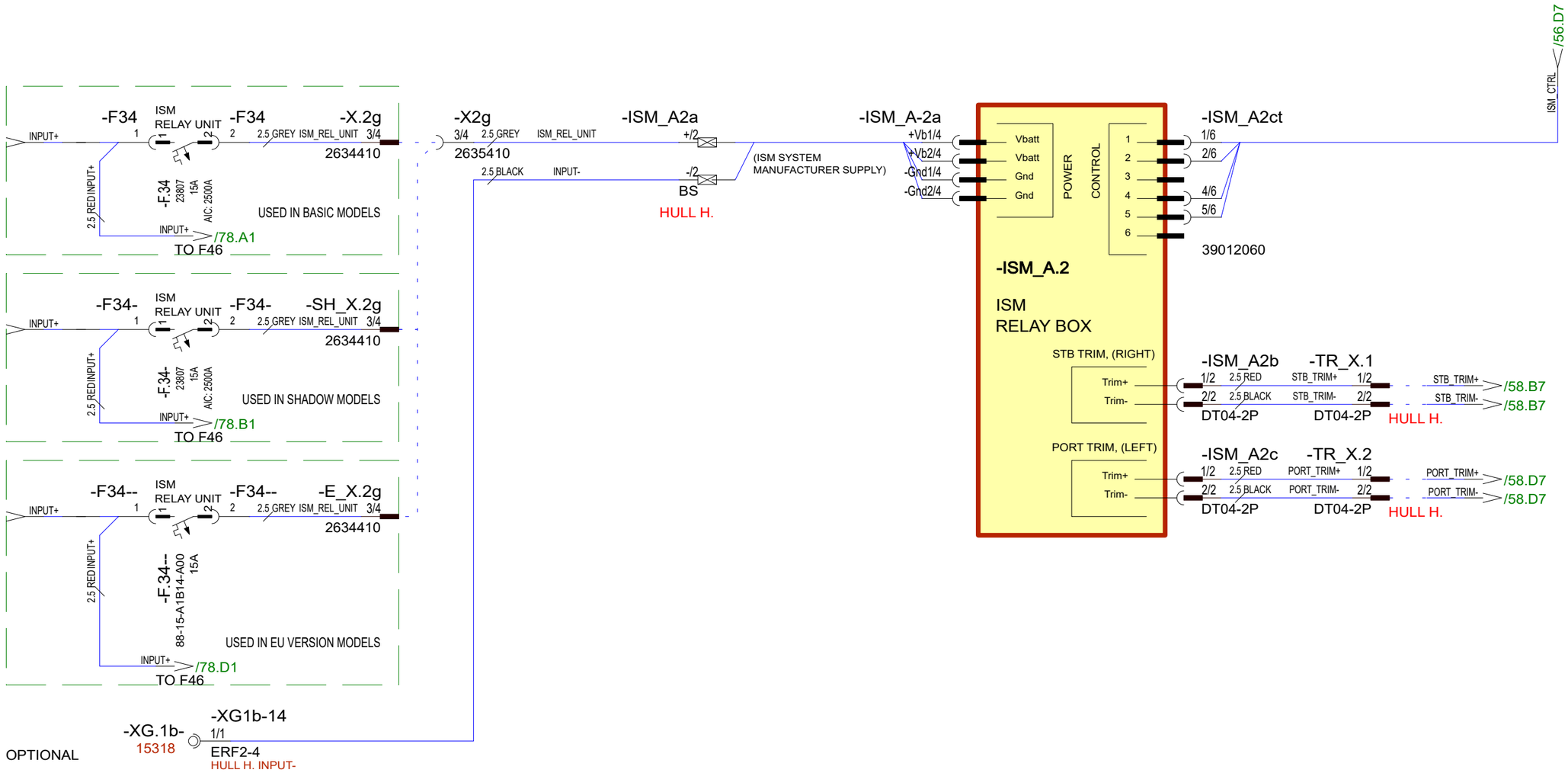

10.10.2023	PF	F22: 2004916; Not modified	Date	14.1.2021	NAVIX designed solutions	Axopar		
20.2.2024	PF	G23; 2005054; Not modified	Drawing by	TuM		Boat	Sub-product code	Product code / Project ID
18.6.2024	PF	G24: 2005139; Not modified	Sheet rev.	24		37 MY20	ISM SYSTEM - DIAGRAM	HL
Date of modification	Modified by	Description	Project rev.	G	Copyright by	Boat model	Title	Loc / Sheet 57 / 210

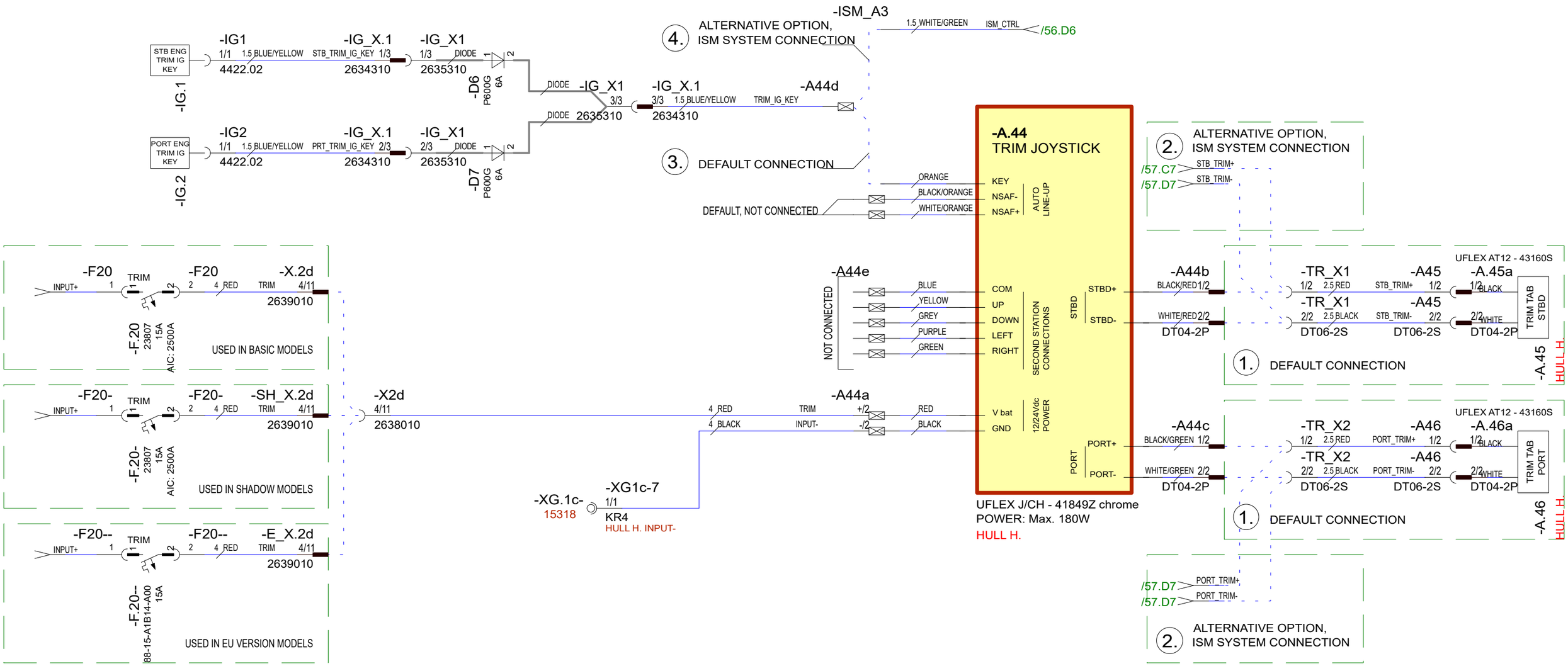

TRIM AUTO LINE-UP ALTERNATIVES:

3. ALTERNATIVE 1:
DEFAULT CONNECTION.
IGN KEY CONNECTED
TO TRIM JOYSTICK:
-A44d connected to -A.44/KEY

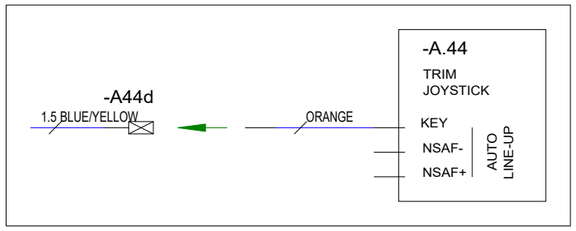

4. ALTERNATIVE 2:
ISM SYSTEM CONNECTION.
IGN KEY CONNECTED
TO ISM CONTROL HARNESS:
-A44d connected to -ISM_A3.

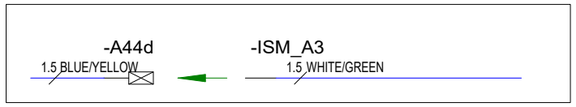

TRIM CONTROL ALTERNATIVES:

1. ALTERNATIVE 1:
DEFAULT CONNECTION.
TRIM TAB ARE CONNECTED
TO TRIM JOYSTICK:
-TR_X1 connected to -A44b
-TR_X2 connected to -A44c

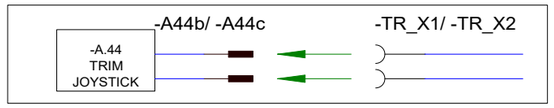

2. ALTERNATIVE 2:
ISM SYSTEM CONNECTION.
TRIM TABS ARE CONNECTED
TO ISM RELAY BOX:
-TR_X1 connected to -TR_X.1
-TR_X2 connected to -TR_X.2

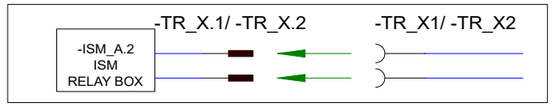

10.10.2023	PF	F22: 2004916; Not modified	Date	14.1.2019	NAVIX designed solutions	Axopar		
20.2.2024	PF	G23; 2005054; Not modified	Drawing by	TuM		Boat	Sub-product code	Product code	Project ID
18.6.2024	PF	G24: 2005139; Not modified	Sheet rev.	24		37 MY20	TRIM - DIAGRAM	HL	58 / 210
Date of modification	Modified by	Description	Project rev.	G	Copyright by	Boat model	Title	Loc	Sheet

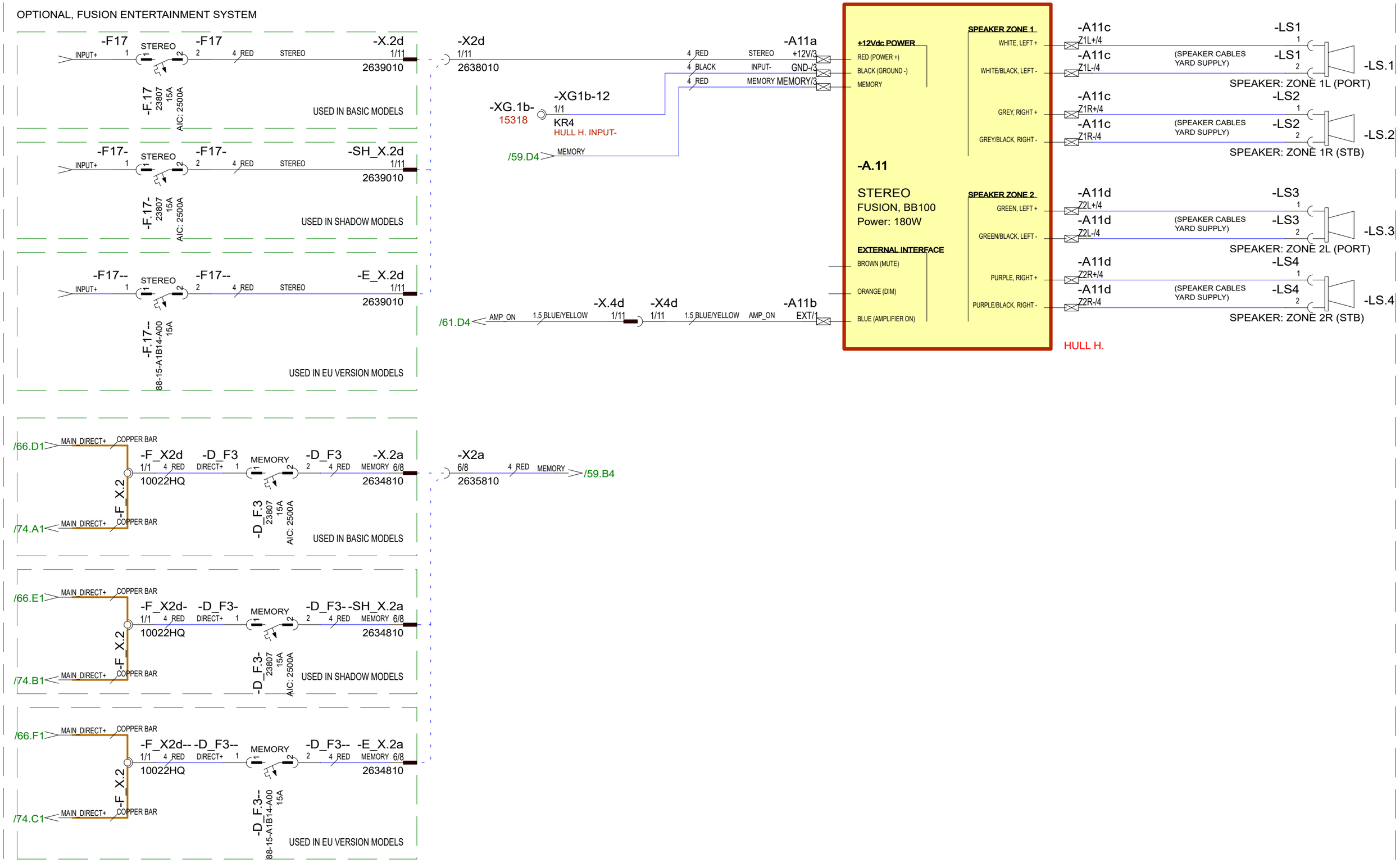

10.10.2023	PF	F22: 2004916; Not modified	Date	14.1.2019	NAVIX designed solutions	Axopar		
20.2.2024	PF	G23; 2005054; Not modified	Drawing by	TuM		Boat	Sub-product code	Product code	Project ID
18.6.2024	PF	G24: 2005139; Not modified	Sheet rev.	24		37 MY20	STEREO - DIAGRAM	HL	59 / 210
Date of modification	Modified by	Description	Project rev.	G	Copyright by	Boat model	Title	Loc	Sheet

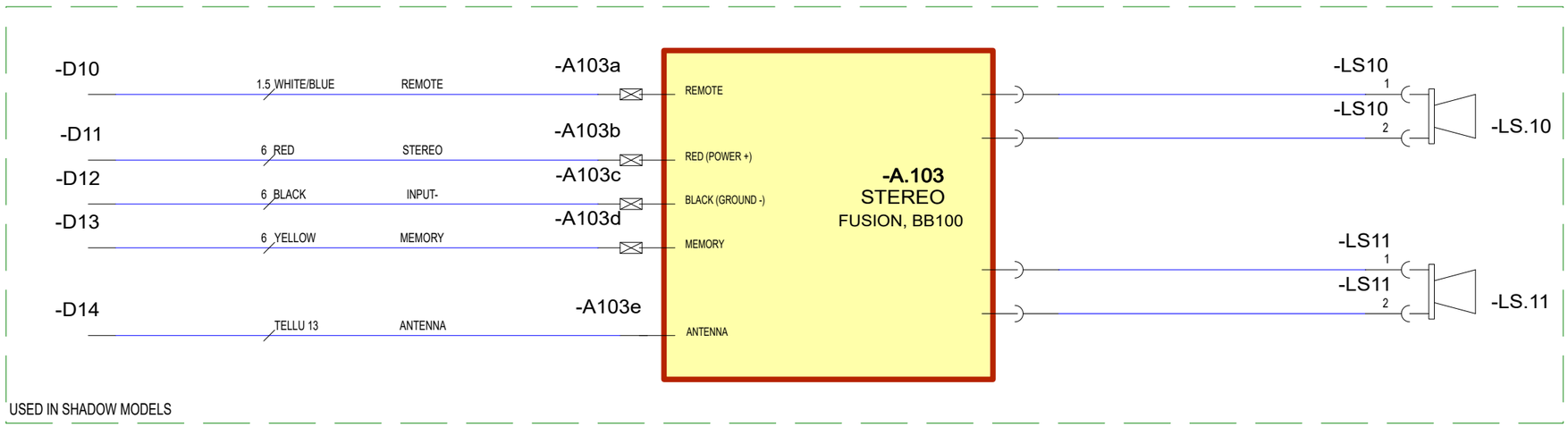

10.10.2023	PF	F22: 2004916; Not modified	Date 6.11.2020	NAVIX designed solutions	Axopar			
20.2.2024	PF	G23; 2005054; Not modified	Drawing by TuM		Boat	Sub-product code	Product code	Project ID
18.6.2024	PF	G24: 2005139; Not modified	Sheet rev. 24		37 MY20	STEREO ADAPTER - DIAGRAM	HL	60 / 210
Date of modification	Modified by	Description	Project rev. G	Copyright by	Boat model	Title	Loc	Sheet

OPTIONAL, AUDIO UPGRADE 2

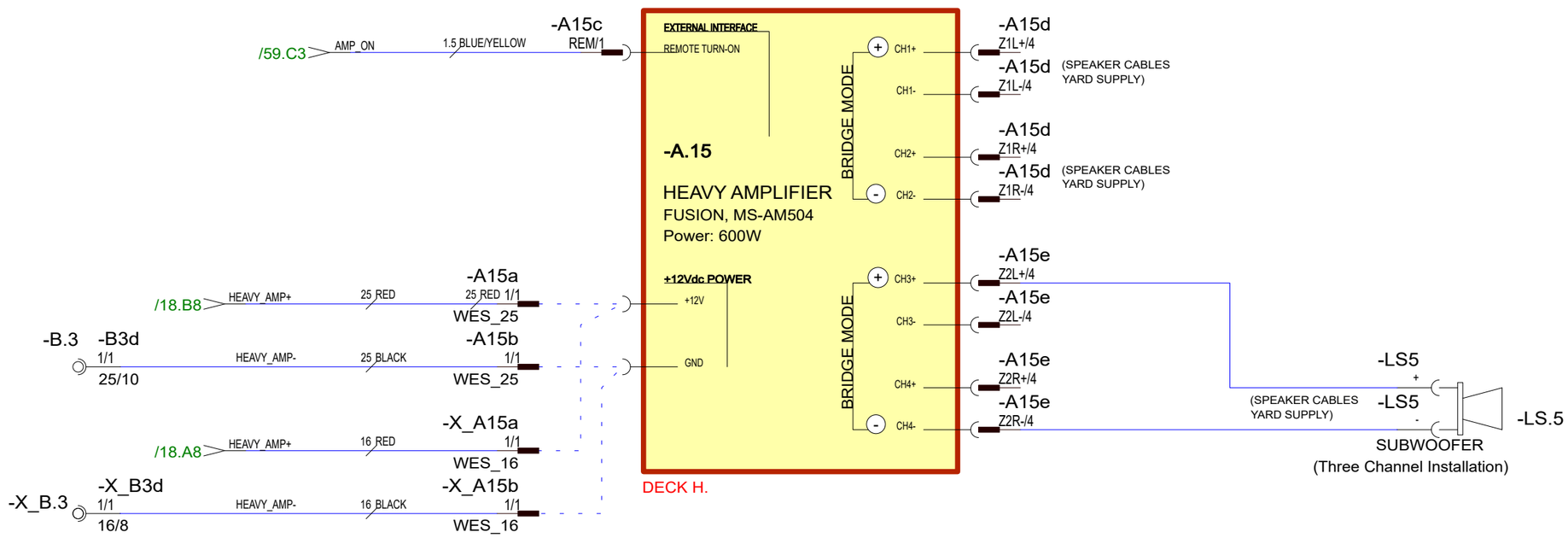

10.10.2023	PF	F22: 2004916; Not modified	Date	14.1.2019	NAVIX designed solutions	Axopar		
20.2.2024	PF	G23; 2005054; Not modified	Drawing by	TuM		Boat	Sub-product code	Product code	Project ID
18.6.2024	PF	G24: 2005139; Not modified	Sheet rev.	24		37 MY20	HEAVY AMPLIFIER - DIAGRAM	HL	61/ 210
Date of modification	Modified by	Description	Project rev.	G	Copyright by	Boat model	Title	Loc	Sheet

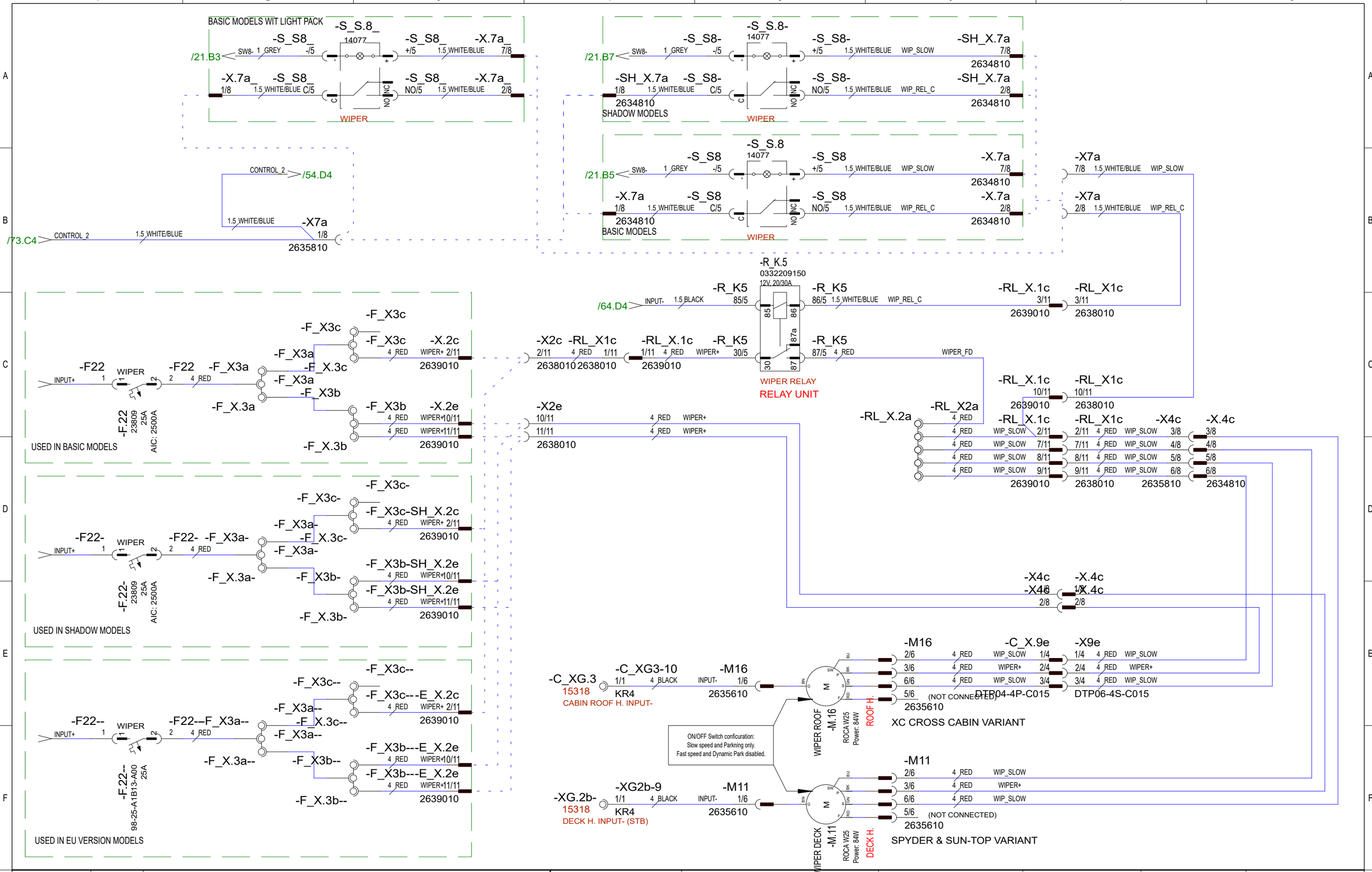

10.10.2023	PF	F22: 2004916; Not modified	Date	14.1.2019	NAVIX designed solutions	Axopar		
20.2.2024	PF	G23; 2005054; -S_S.8_ added	Drawing by	TuM		Boat	Sub-product code	Product code / Project ID
18.6.2024	PF	G24: 2005139; Not modified	Sheet rev.	24		37 MY20	WIPERS - DIAGRAM	HL
Date of modification	Modified by	Description	Project rev.	G	Copyright by	Boat model	Title	Loc / Sheet 62 / 210

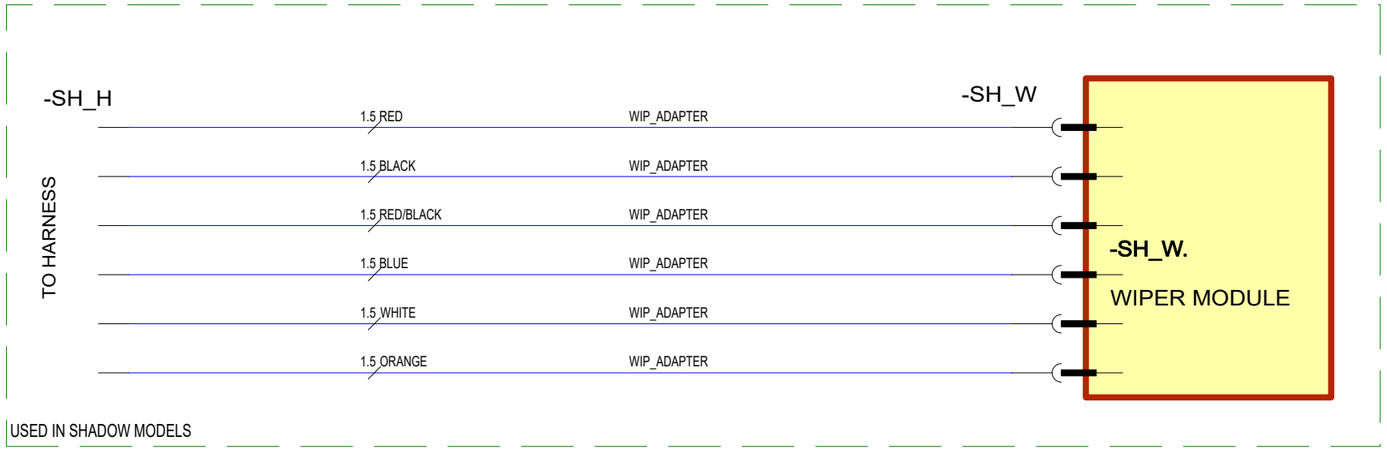

10.10.2023	PF	F22: 2004916; Not modified	Date	14.01.2019	NAVIX designed solutions	Axopar			
20.2.2024	PF	G23; 2005054; Not modified	Drawing by	TuM		Boat	Sub-product code	Product code	Project ID
18.6.2024	PF	G24: 2005139; Not modified	Sheet rev.	24		37 MY20	WIPER ADAPTER - DIAGRAM	HL	63 / 210
Date of modification	Modified by	Description	Project rev.	G	Copyright by	Boat model	Title	Loc	Sheet

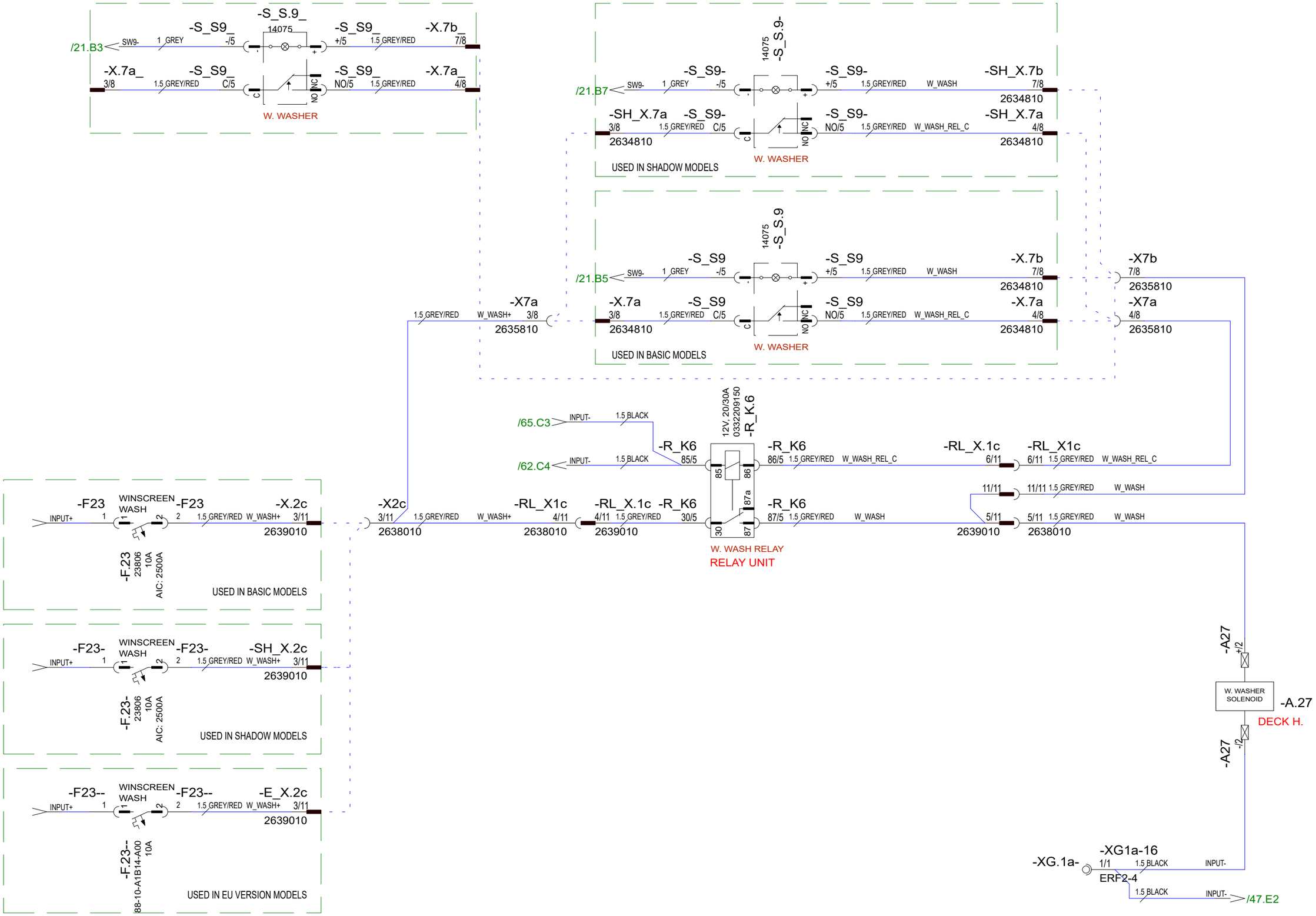

10.10.2023	PF	F22: 2004916; Not modified	Date	14.1.2019	NAVIX designed solutions	Axopar		
20.2.2024	PF	G23; 2005054; -S_S.9_ added	Drawing by	TuM		Boat	Sub-product code	Product code / Project ID
18.6.2024	PF	G24: 2005139; Not modified	Sheet rev.	24		37 MY20	WINDSCREEN WASH - DIAGRAM	HL
Date of modification	Modified by	Description	Project rev.	G	Copyright by	Boat model	Title	Loc / Sheet 64 / 210

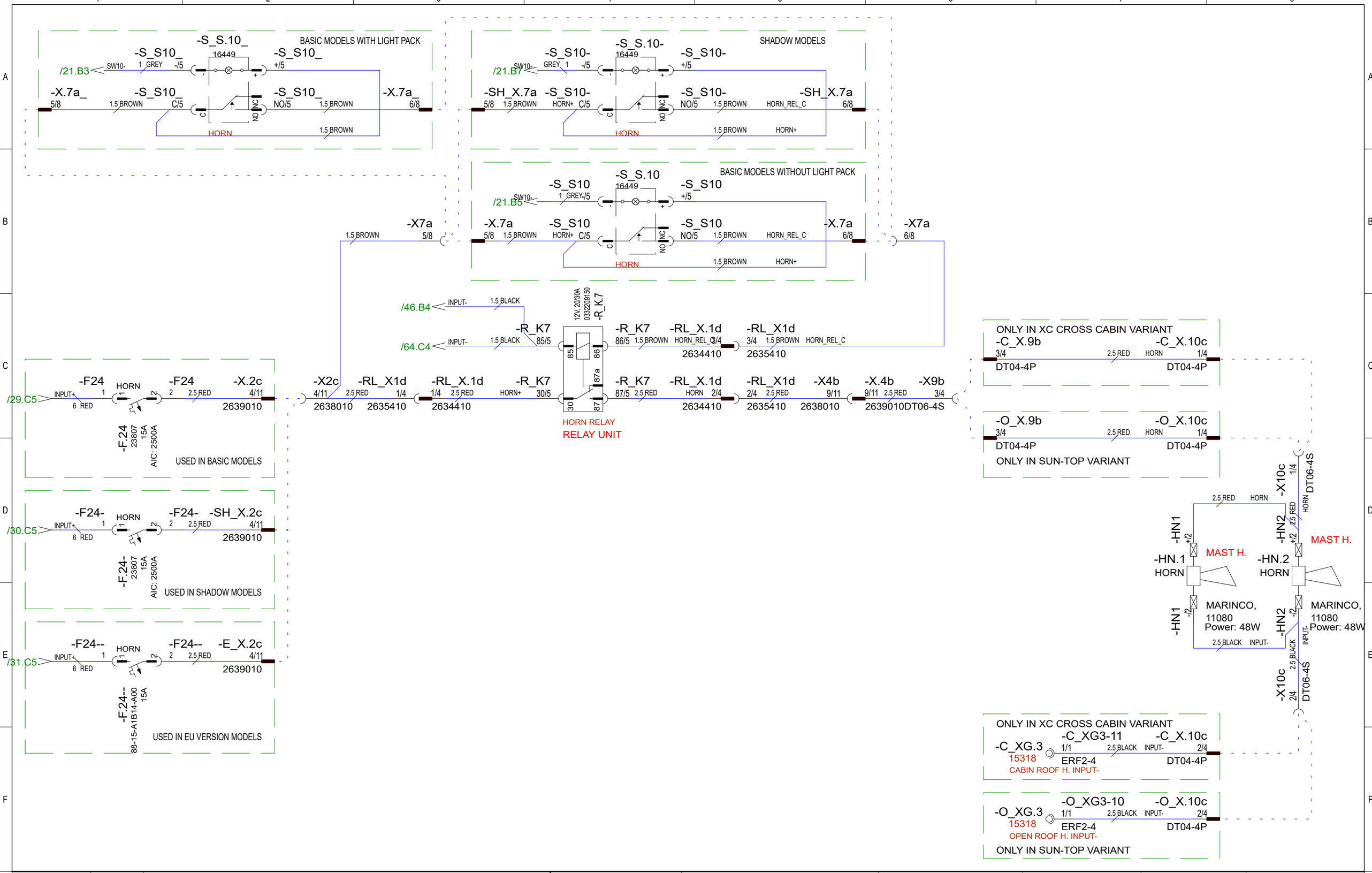

10.10.2023	PF	F22: 2004916; Not modified	Date	14.1.2019	NAVIX designed solutions	Axopar			
20.2.2024	PF	G23; 2005054; -S_S.10_ added	Drawing by	TuM		Boat	Sub-product code	Product code	Project ID
18.6.2024	PF	G24: 2005139; Not modified	Sheet rev.	24		37 MY20	HORN - DIAGRAM	HL	65 / 210
Date of modification	Modified by	Description	Project rev.	G	Copyright by	Boat model	Title	Loc	Sheet

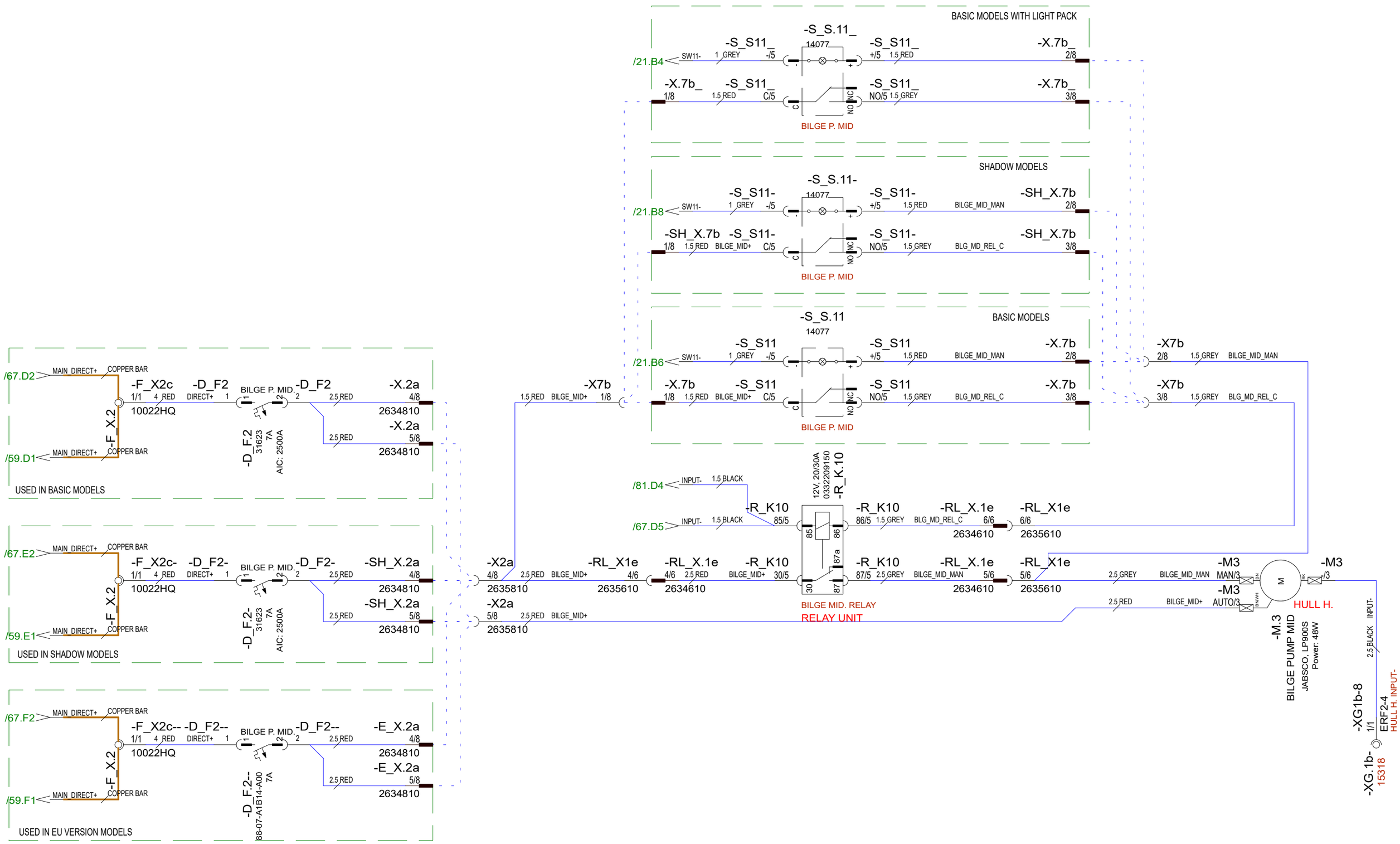

10.10.2023	PF	F22: 2004916; Not modified	Date	14.1.2019	NAVIX designed solutions	Axopar			
20.2.2024	PF	G23; 2005054; -S_S.11_ added	Drawing by	TuM		Boat	Sub-product code	Product code	Project ID
18.6.2024	PF	G24: 2005139; Not modified	Sheet rev.	24		37 MY20	BILGE PUMP MID - DIAGRAM	HL	66 / 210
Date of modification	Modified by	Description	Project rev.	G	Copyright by	Boat model	Title	Loc	Sheet

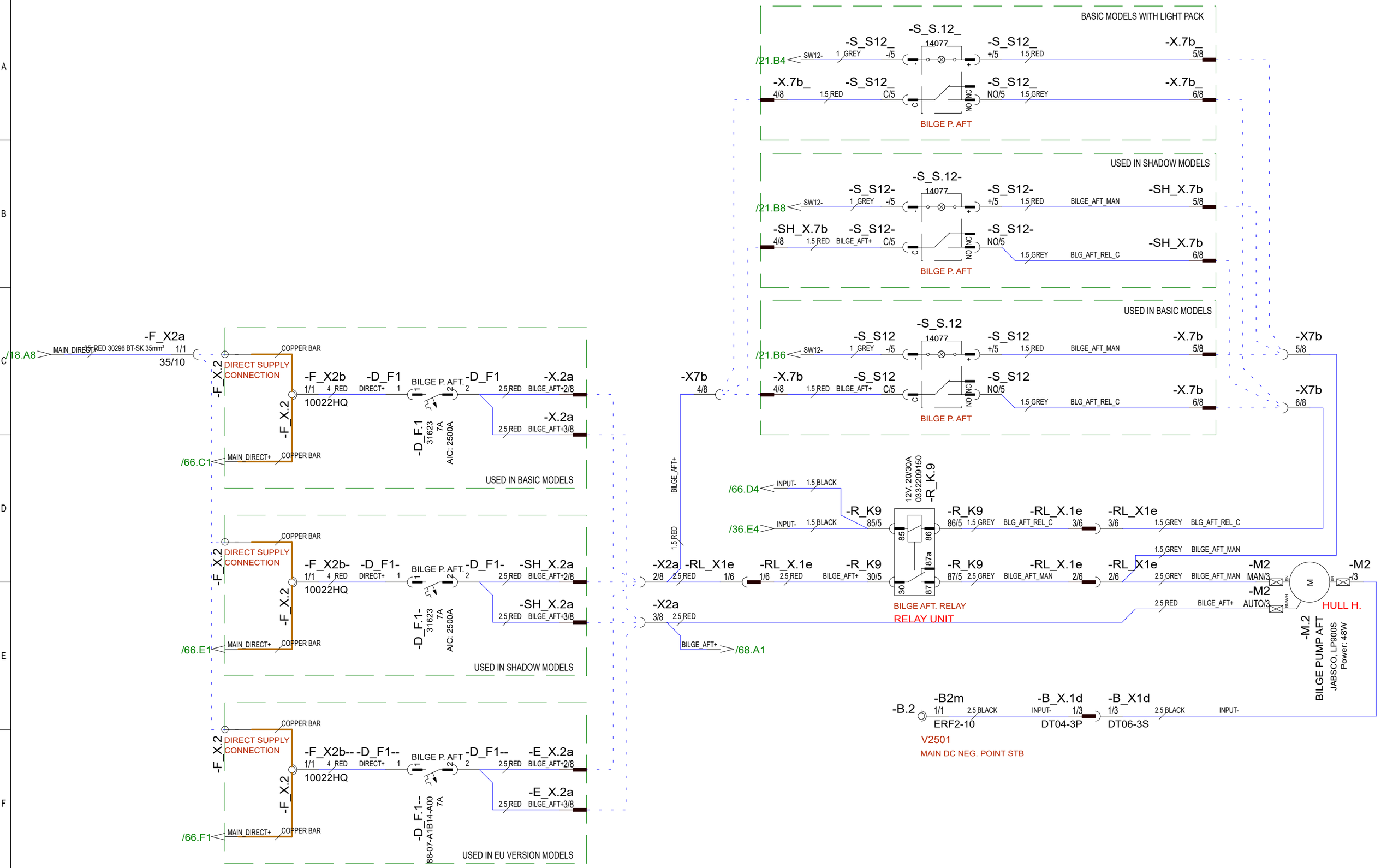

10.10.2023	PF	F22: 2004916; Not modified	Date	14.1.2019	NAVIX designed solutions	Axopar		
20.2.2024	PF	G23; 2005054; -S_S.12_ added	Drawing by	TuM		Boat	Sub-product code	Product code	Project ID
18.6.2024	PF	G24: 2005139; Not modified	Sheet rev.	24		37 MY20	BILGE PUMP AFT - DIAGRAM	HL	67 / 210
Date of modification	Modified by	Description	Project rev.	G	Copyright by	Boat model	Title	Loc	Sheet

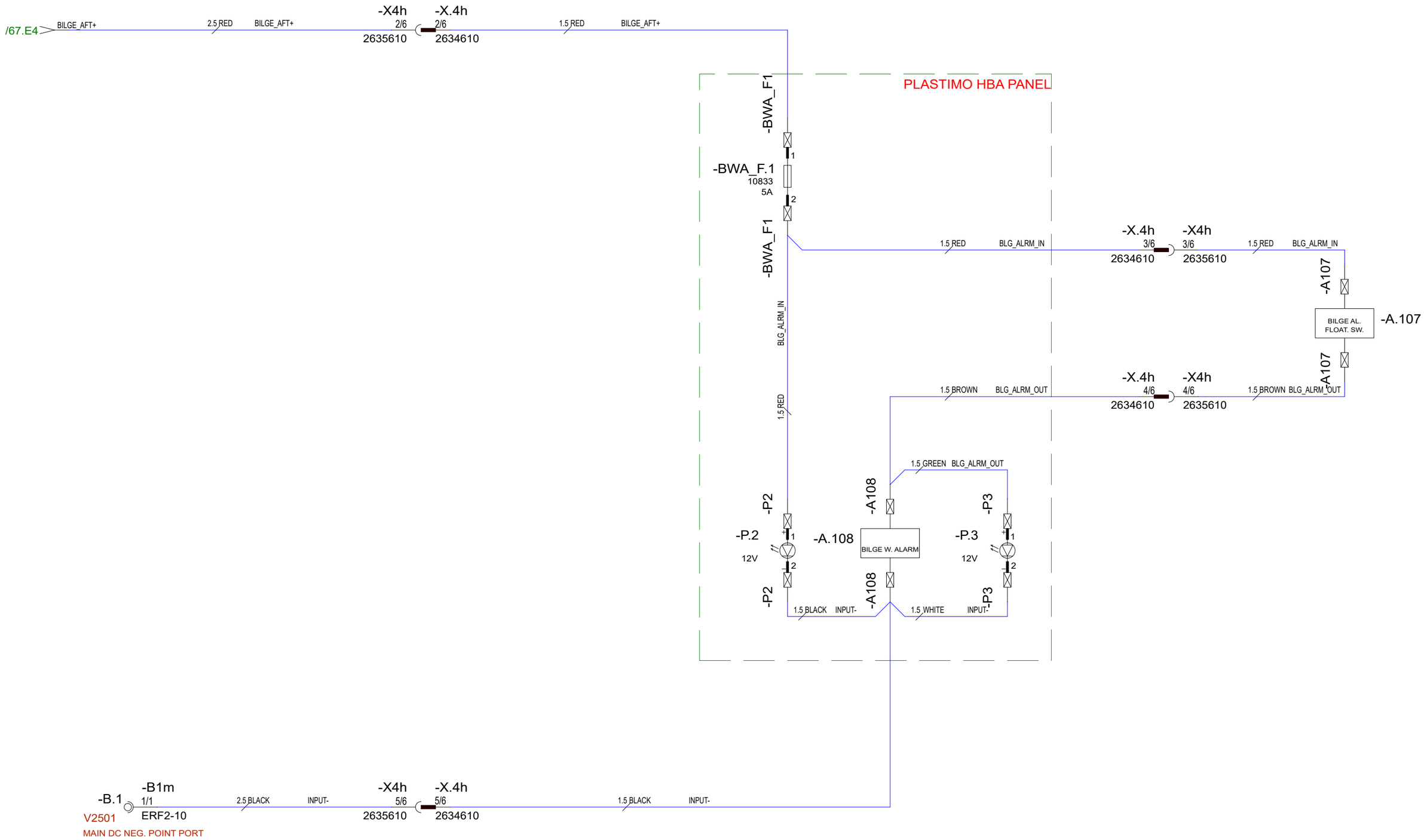

10.10.2023	PF	F22: 2004916; Not modified	Date	16.2.2023	NAVIX designed solutions	Axopar			
20.2.2024	PF	G23; 2005054; Not modified	Drawing by	TT		Boat	Sub-product code	Product code	Project ID
18.6.2024	PF	G24: 2005139; Not modified	Sheet rev.	24		37 MY20 SHADOW	BILGE ALARM	HL	68 / 210
Date of modification	Modified by	Description	Project rev.	G	Copyright by	Boat model	Title	Loc	Sheet

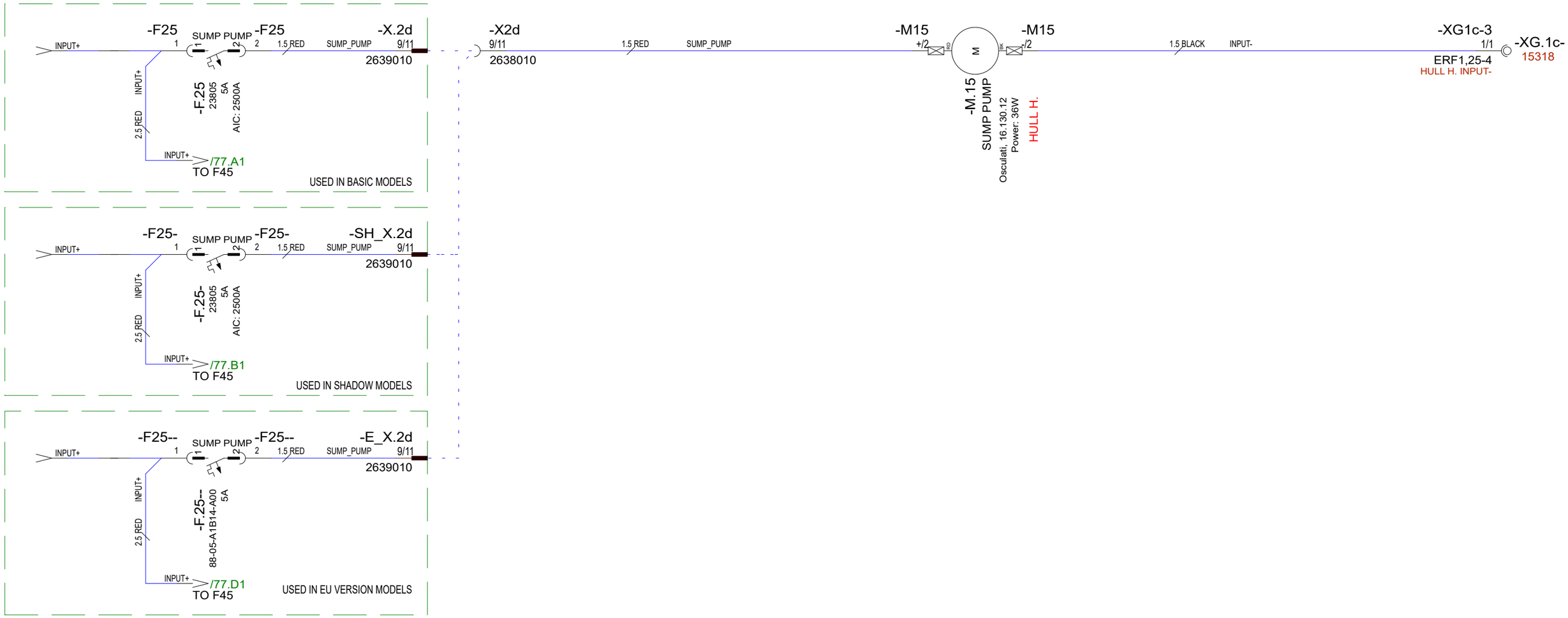

10.10.2023	PF	F22: 2004916; Not modified	Date	14.1.2019	NAVIX designed solutions	Axopar			
20.2.2024	PF	G23; 2005054; Not modified	Drawing by	TuM		Boat	Sub-product code	Product code	Project ID
18.6.2024	PF	G24: 2005139; Not modified	Sheet rev.	24		37 MY20	PUMPS - DIAGRAM	HL	69 / 210
Date of modification	Modified by	Description	Project rev.	G	Copyright by	Boat model	Title	Loc	Sheet

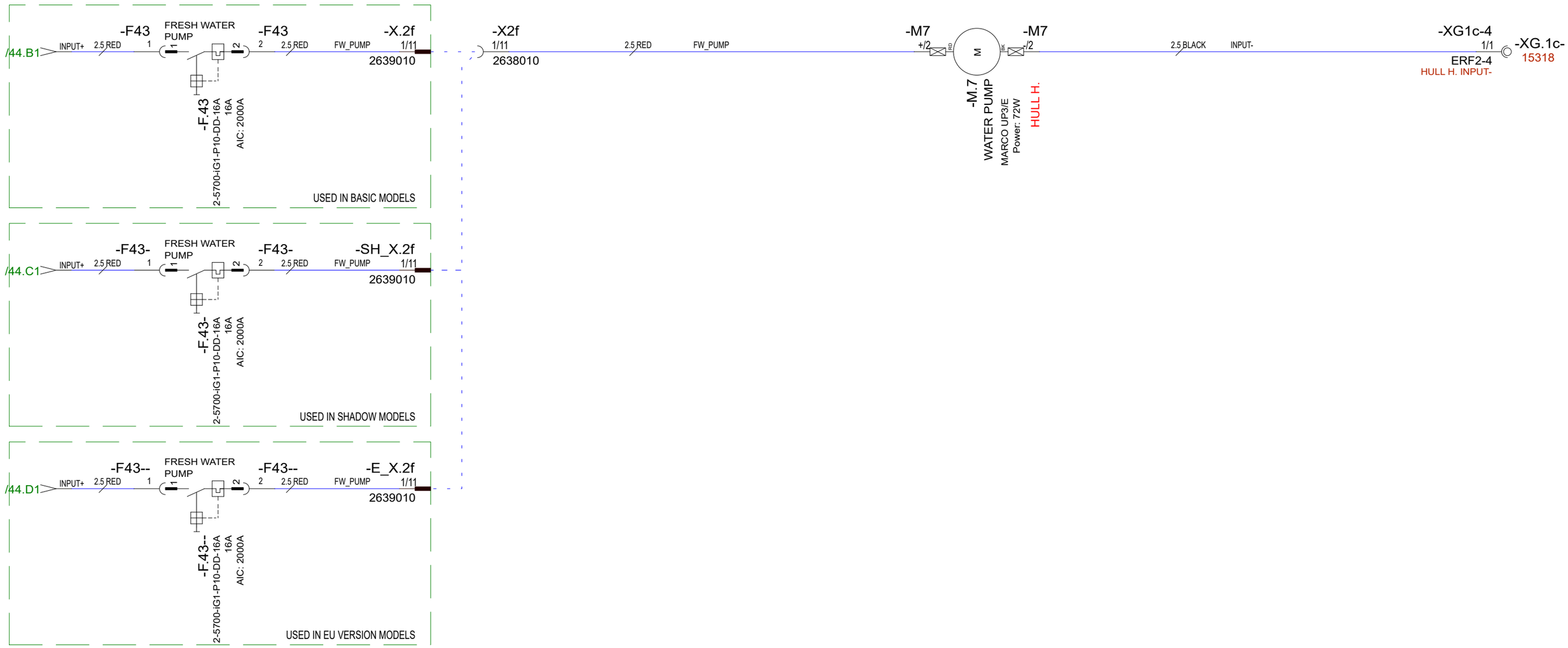

10.10.2023	PF	F22: 2004916; Not modified	Date	14.1.2019	NAVIX designed solutions	Axopar		
20.2.2024	PF	G23; 2005054; Not modified	Drawing by	TuM		Boat	Sub-product code	Product code	Project ID
18.6.2024	PF	G24: 2005139; Not modified	Sheet rev.	24		37 MY20	PUMPS - DIAGRAM	HL	70 / 210
Date of modification	Modified by	Description	Project rev.	G	Copyright by	Boat model	Title	Loc	Sheet

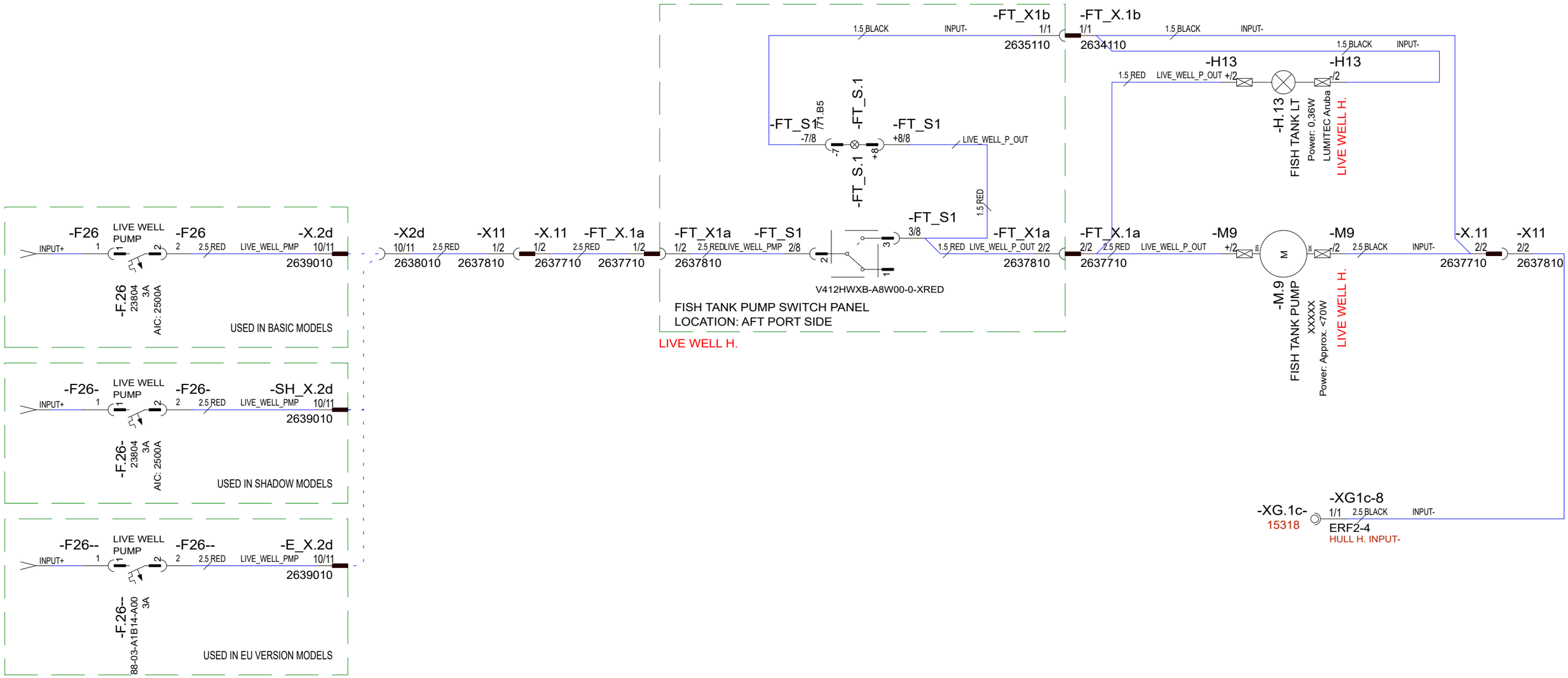

10.10.2023	PF	F22: 2004916; Not modified, 2004954; Livewell fuse to 3A+retrofit version	Date	14.1.2019	NAVIX designed solutions	Axopar		
20.2.2024	PF	G23; 2005054; Not modified	Drawing by	TuM		Boat	Sub-product code	Product code	Project ID
18.6.2024	PF	G24: 2005139; Not modified	Sheet rev.	24		37 MY20	LIVE WELL PUMP - DIAGRAM	HL	71/ 210
Date of modification	Modified by	Description	Project rev.	G	Copyright by	Boat model	Title	Loc	Sheet

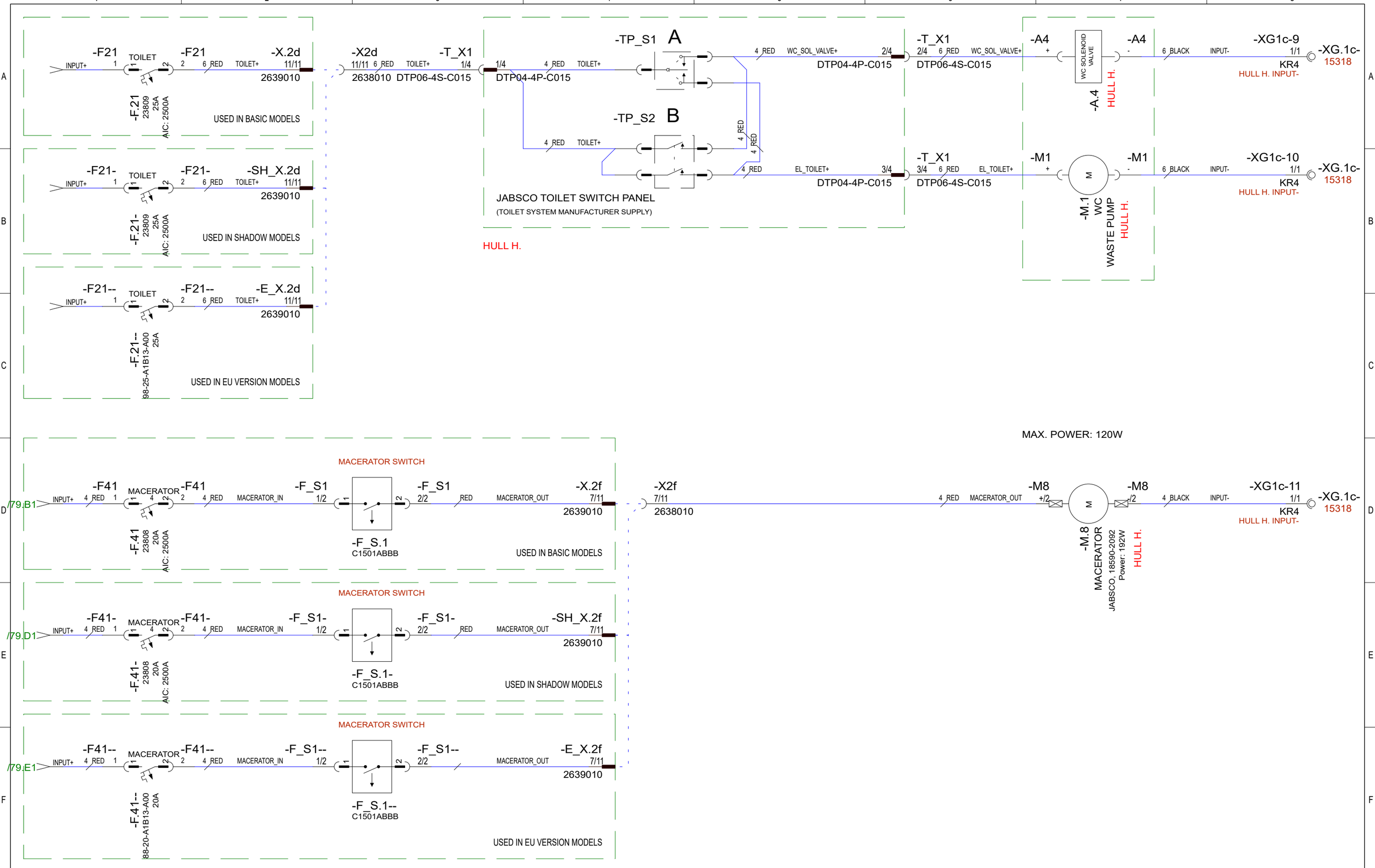

10.10.2023	PF	F22: 2004916; Not modified	Date	14.1.2021	NAVIX designed solutions	Axopar		
20.2.2024	PF	G23; 2005054; Not modified	Drawing by	TuM		Boat	Sub-product code	Product code	Project ID
18.6.2024	PF	G24: 2005139; Not modified	Sheet rev.	24		37 MY20	TOILET/ MACERATOR/ WASTE TANK SNS - DIAGRAM	HL	72 / 210
Date of modification	Modified by	Description	Project rev.	G	Copyright by	Boat model	Title	Loc	Sheet

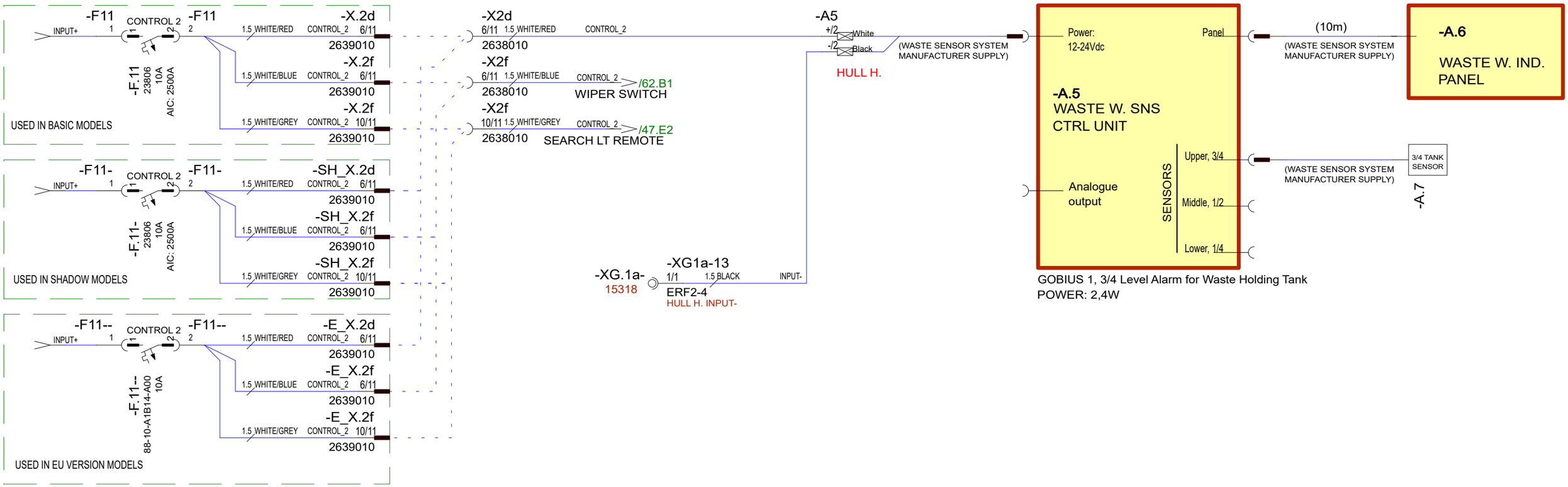

Date of modification	Modified by	Description
10.10.2023	PF	F22: 2004916; Not modified
20.2.2024	PF	G23; 2005054; Not modified
18.6.2024	PF	G24: 2005139; Not modified

Date	14.1.2019
Drawing by	TuM
Sheet rev.	24
Project rev.	G

NAVIX designed solutions

Copyright by

Axopar Boat	Sub-product code	Product code	Project ID
37 MY20 Boat model	TOILET/ MACERATOR/ WASTE TANK SNS - DIAGRAM Title	HL Loc	73 / 210 Sheet

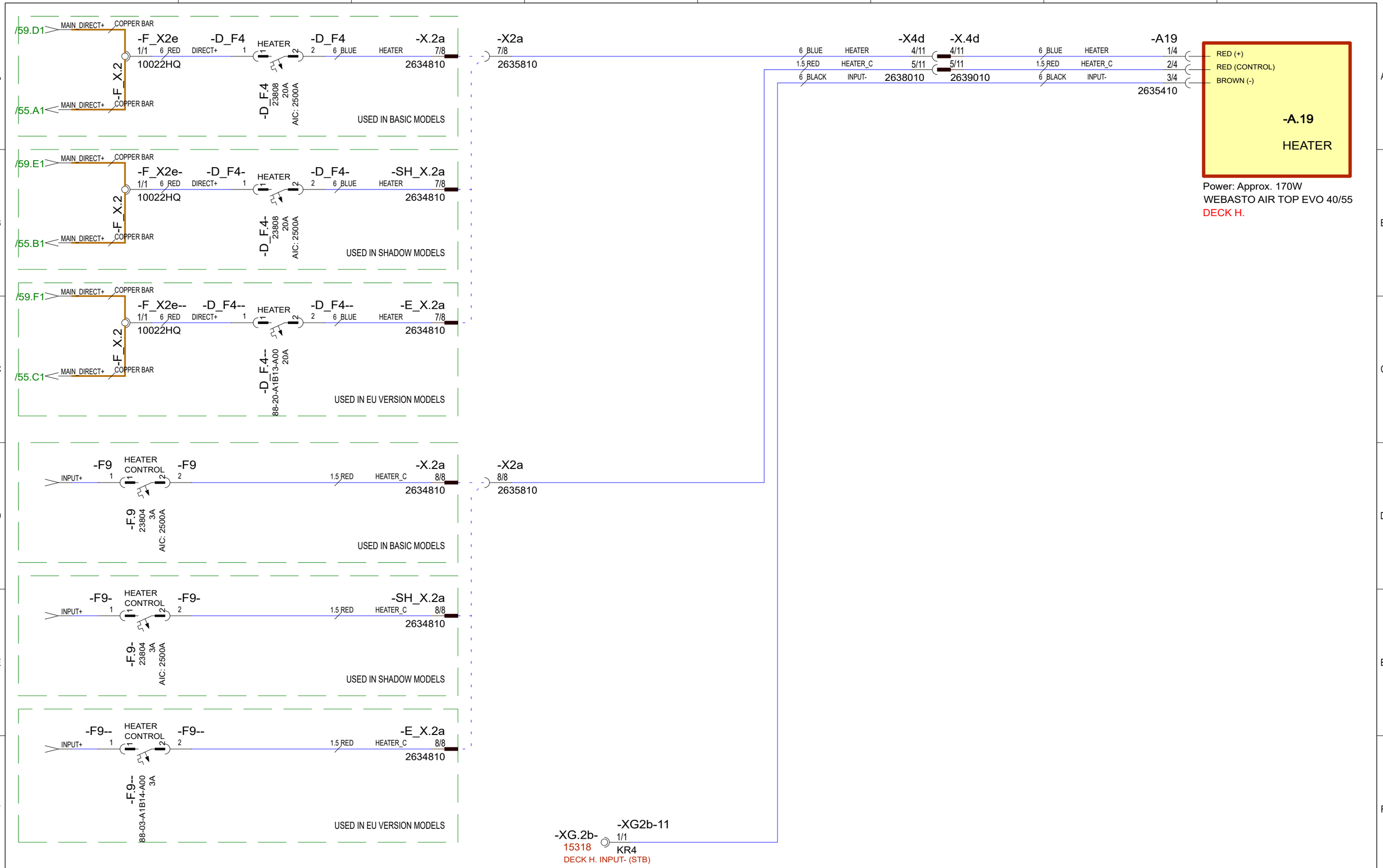

10.10.2023	PF	F22: 2004916; Not modified	Date	14.1.2019	NAVIX designed solutions	Axopar		
20.2.2024	PF	G23; 2005054; Not modified	Drawing by	TuM		Boat	Sub-product code	Product code / Project ID
18.6.2024	PF	G24: 2005139; Not modified	Sheet rev.	24		37 MY20	HEATER - DIAGRAM	HL
Date of modification	Modified by	Description	Project rev.	G	Copyright by	Boat model	Title	Loc / Sheet 74 / 210

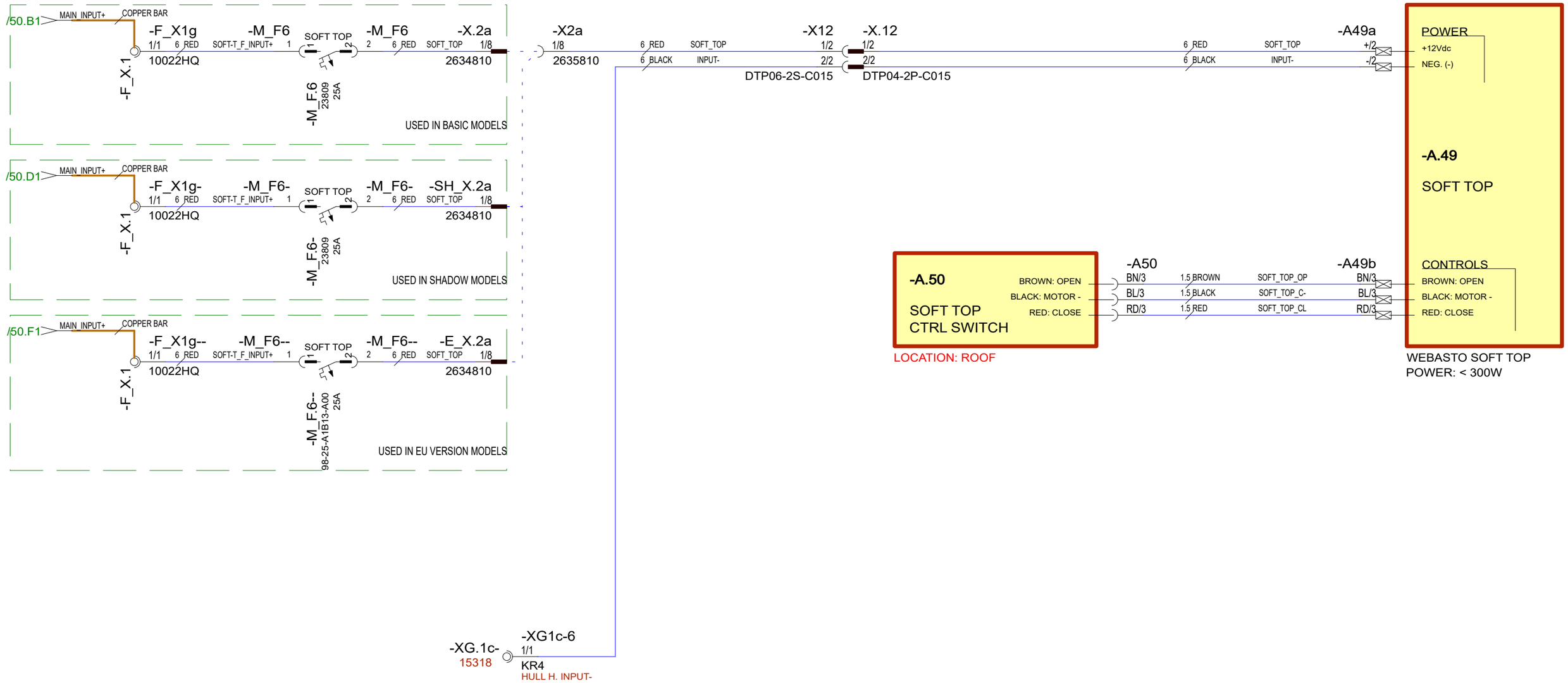

10.10.2023	PF	F22: 2004916; Not modified	Date	5.4.2019	NAVIX designed solutions	Axopar		
20.2.2024	PF	G23; 2005054; Not modified	Drawing by	TuM		Boat	Sub-product code	Product code	Project ID
18.6.2024	PF	G24: 2005139; Not modified	Sheet rev.	24		37 MY20	SOFT TOP - DIAGRAM	HL	75 / 210
Date of modification	Modified by	Description	Project rev.	G	Copyright by	Boat model	Title	Loc	Sheet

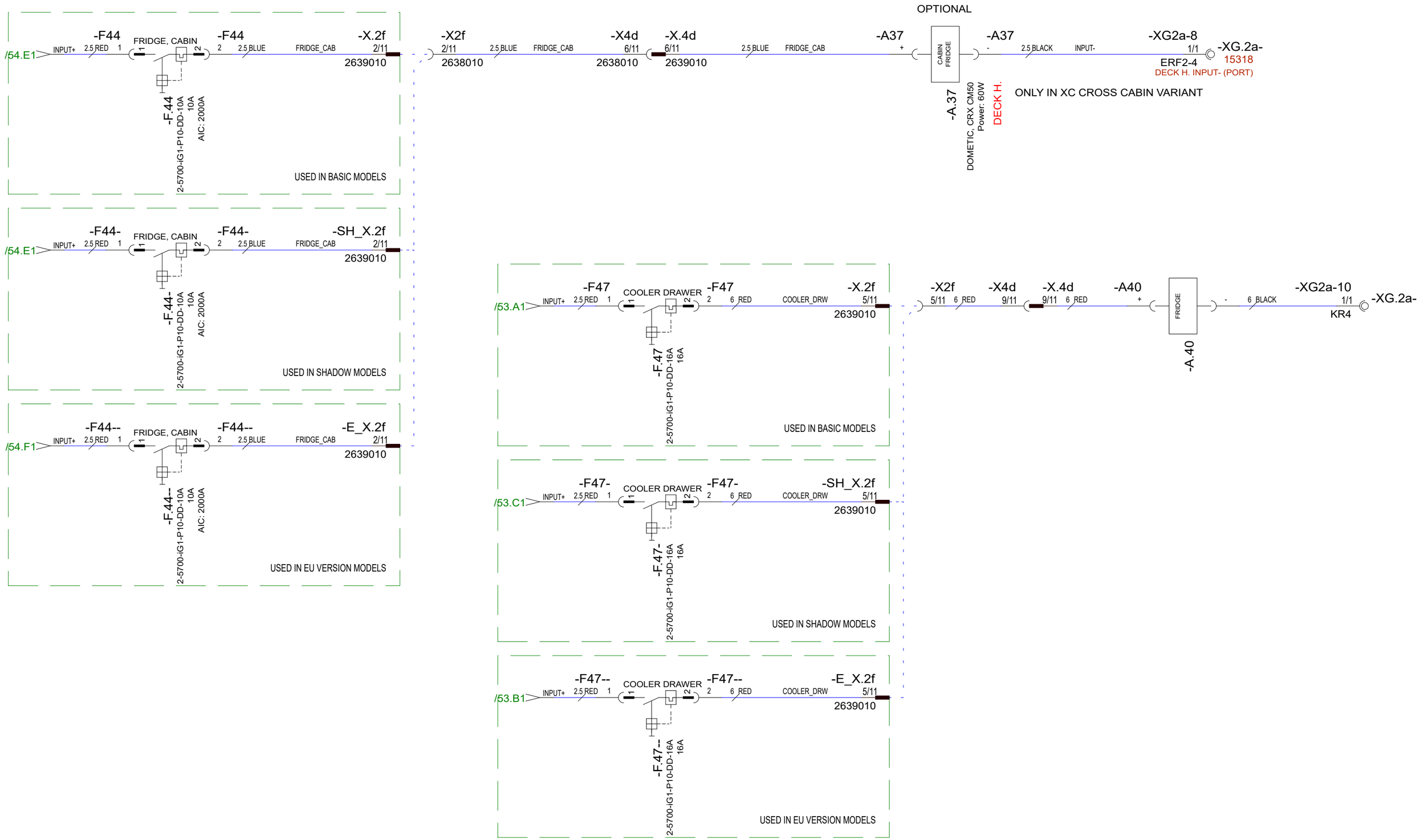

10.10.2023	PF	F22: 2004916; Not modified	Date	14.1.2019	NAVIX designed solutions	Axopar		
20.2.2024	PF	G23; 2005054; A40 Cooler/fridge 10A -> 16A, wiring added	Drawing by	TuM		Boat	Sub-product code	Product code	Project ID
18.6.2024	PF	G24: 2005139; Not modified	Sheet rev.	24		37 MY20	REFRIGERATORS - DIAGRAM	HL	76 / 210
Date of modification	Modified by	Description	Project rev.	G	Copyright by	Boat model	Title	Loc	Sheet

10.10.2023	PF	F22: 2004916; Not modified	Date	23.4.2020	NAVIX designed solutions	Axopar		
20.2.2024	PF	G23; 2005054; Not modified	Drawing by	TuM		Boat	Sub-product code	Product code / Project ID
18.6.2024	PF	G24: 2005139; Not modified	Sheet rev.	24		37 MY20	REFRIGERATORS - DIAGRAM	HL
Date of modification	Modified by	Description	Project rev.	G	Copyright by	Boat model	Title	Loc / Sheet: 77 / 210

10.10.2023	PF	F22: 2004916; Not modified	Date	23.04.2020	NAVIX designed solutions	Axopar			
20.2.2024	PF	G23; 2005054; Not modified	Drawing by	TuM		Boat	Sub-product code	Product code	Project ID
18.6.2024	PF	G24: 2005139; Not modified	Sheet rev.	24		37 MY20	REFRIGERATORS - DIAGRAM	HL	78 / 210
Date of modification	Modified by	Description	Project rev.	G	Copyright by	Boat model	Title	Loc	Sheet

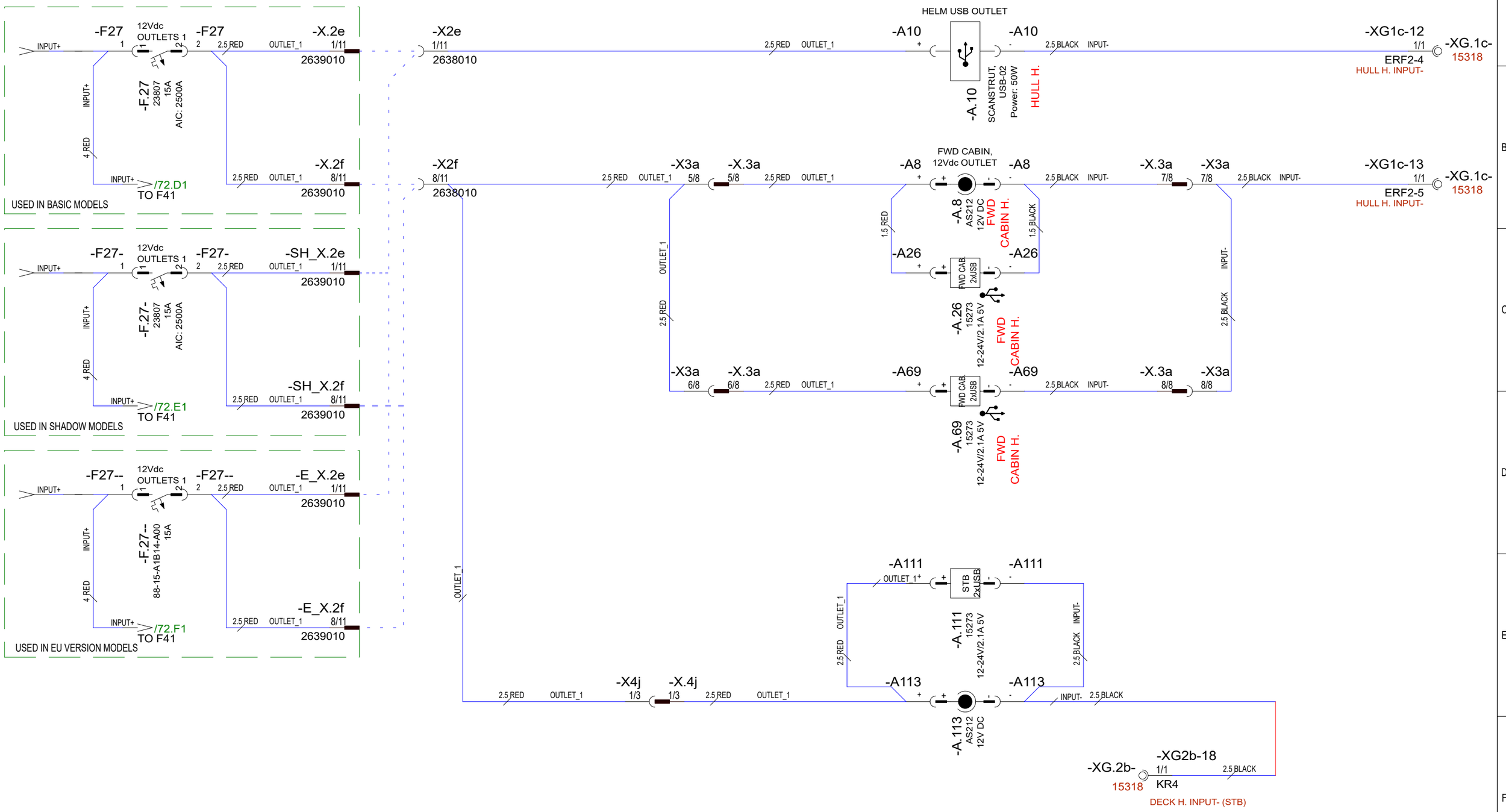

10.10.2023	PF	F22: 2004916; Added A111, A113 & X4j	Date	14.1.2019	NAVIX designed solutions	Axopar		
20.2.2024	PF	G23; 2005054; Wire sizes	Drawing by	TuM		Boat	Sub-product code	Product code	Project ID
18.6.2024	PF	G24: 2005139; Not modified	Sheet rev.	24		37 MY20	12Vdc OUTLETS/ USB - DIAGRAM	HL	79 / 210
Date of modification	Modified by	Description	Project rev.	G	Copyright by	Boat model	Title	Loc	Sheet

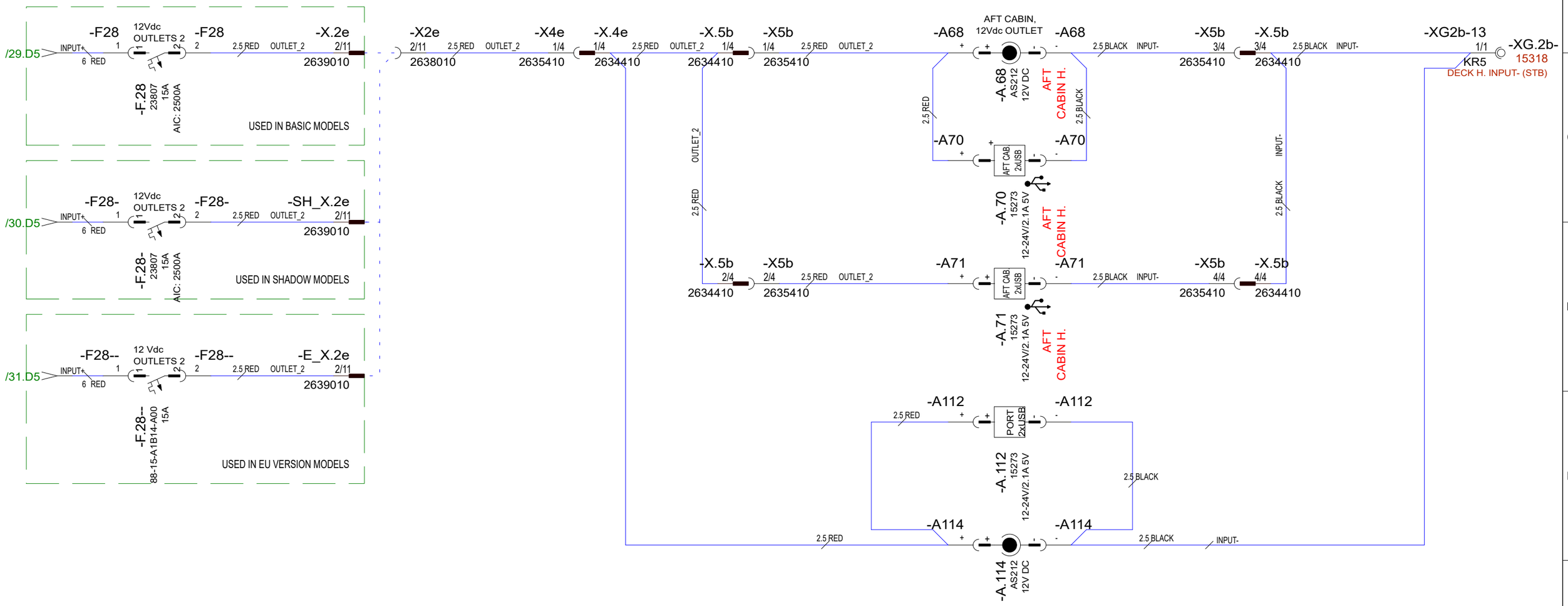

10.10.2023	PF	F22: 2004916; Added A112&A114	Date	14.1.2019	NAVIX designed solutions	Axopar		
20.2.2024	PF	G23; 2005054; Not modified	Drawing by	TuM		Boat	Sub-product code	Product code	Project ID
18.6.2024	PF	G24: 2005139; Not modified	Sheet rev.	24		37 MY20	12Vdc OUTLETS/ USB - DIAGRAM	HL	80 / 210
Date of modification	Modified by	Description	Project rev.	G	Copyright by	Boat model	Title	Loc	Sheet

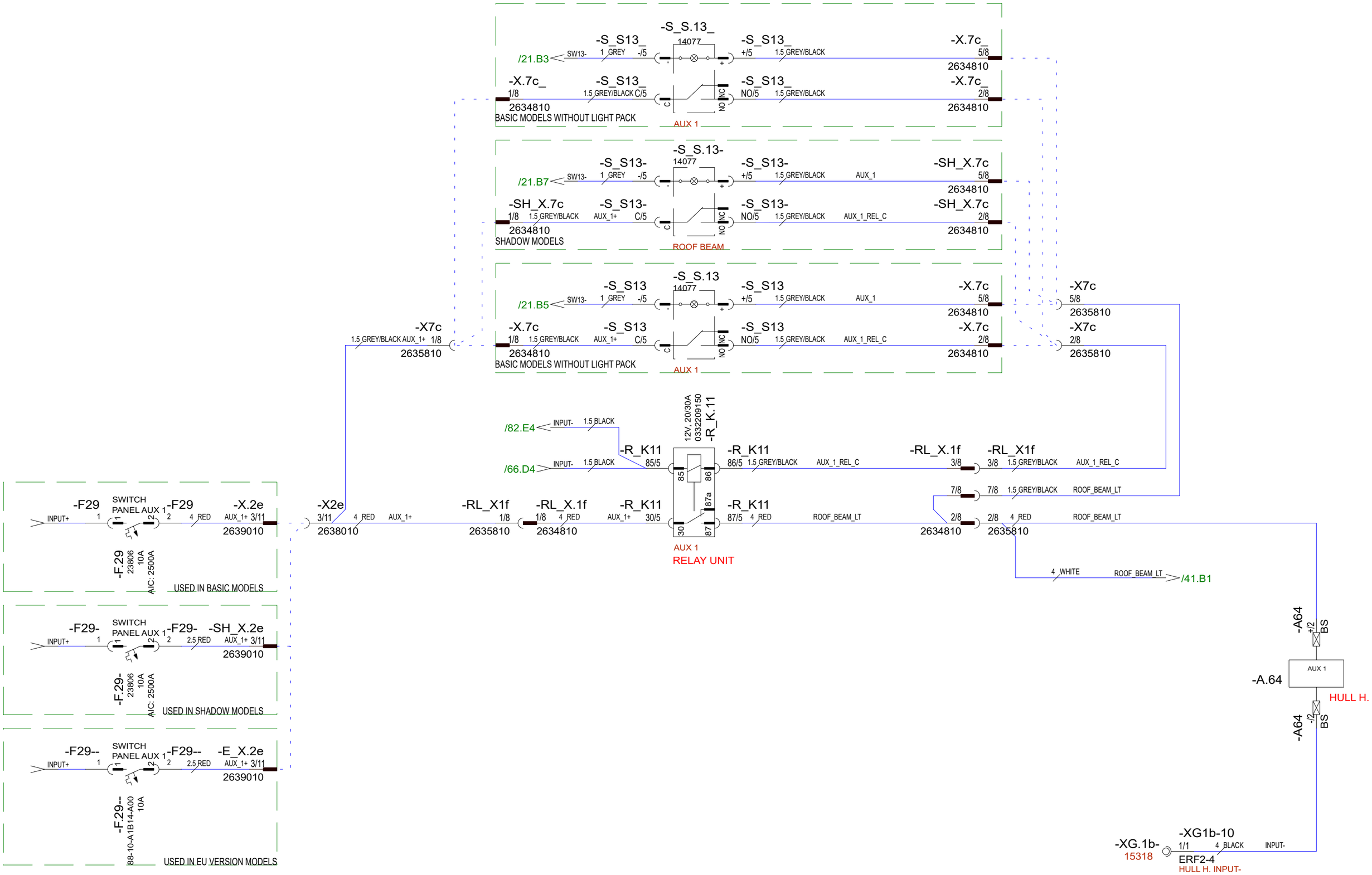

10.10.2023	PF	F22: 2004916; Not modified	Date	14.1.2019	NAVIX designed solutions	Axopar			
20.2.2024	PF	G23; 2005054; -S_S.13_ added	Drawing by	TuM		Boat	Sub-product code	Product code	Project ID
18.6.2024	PF	G24: 2005139; Not modified	Sheet rev.	24		37 MY20	AUX 1 - DIAGRAM	HL	81/ 210
Date of modification	Modified by	Description	Project rev.	G	Copyright by	Boat model	Title	Loc	Sheet

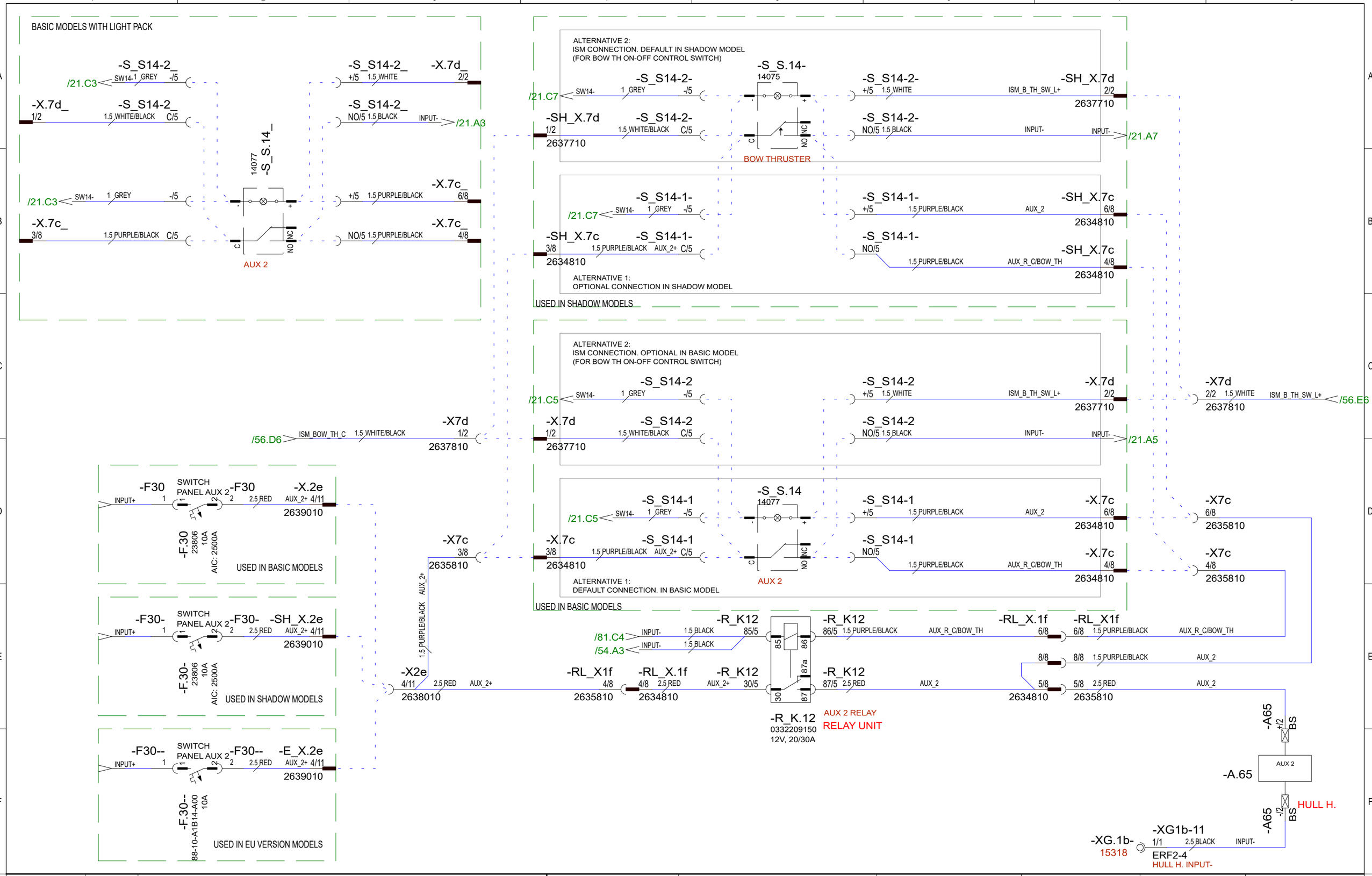

10.10.2023	PF	F22: 2004916; Not modified	Date	14.1.2019	NAVIX designed solutions	Axopar		
20.2.2024	PF	G23; 2005054; -S_S.14_ added	Drawing by	TuM		Boat	Sub-product code	Product code	Project ID
18.6.2024	PF	G24: 2005139; Not modified	Sheet rev.	24		37 MY20	AUX 2/BOW THRUSTER - DIAGRAM	HL	82 / 210
Date of modification	Modified by	Description	Project rev.	G	Copyright by	Boat model	Title	Loc	Sheet

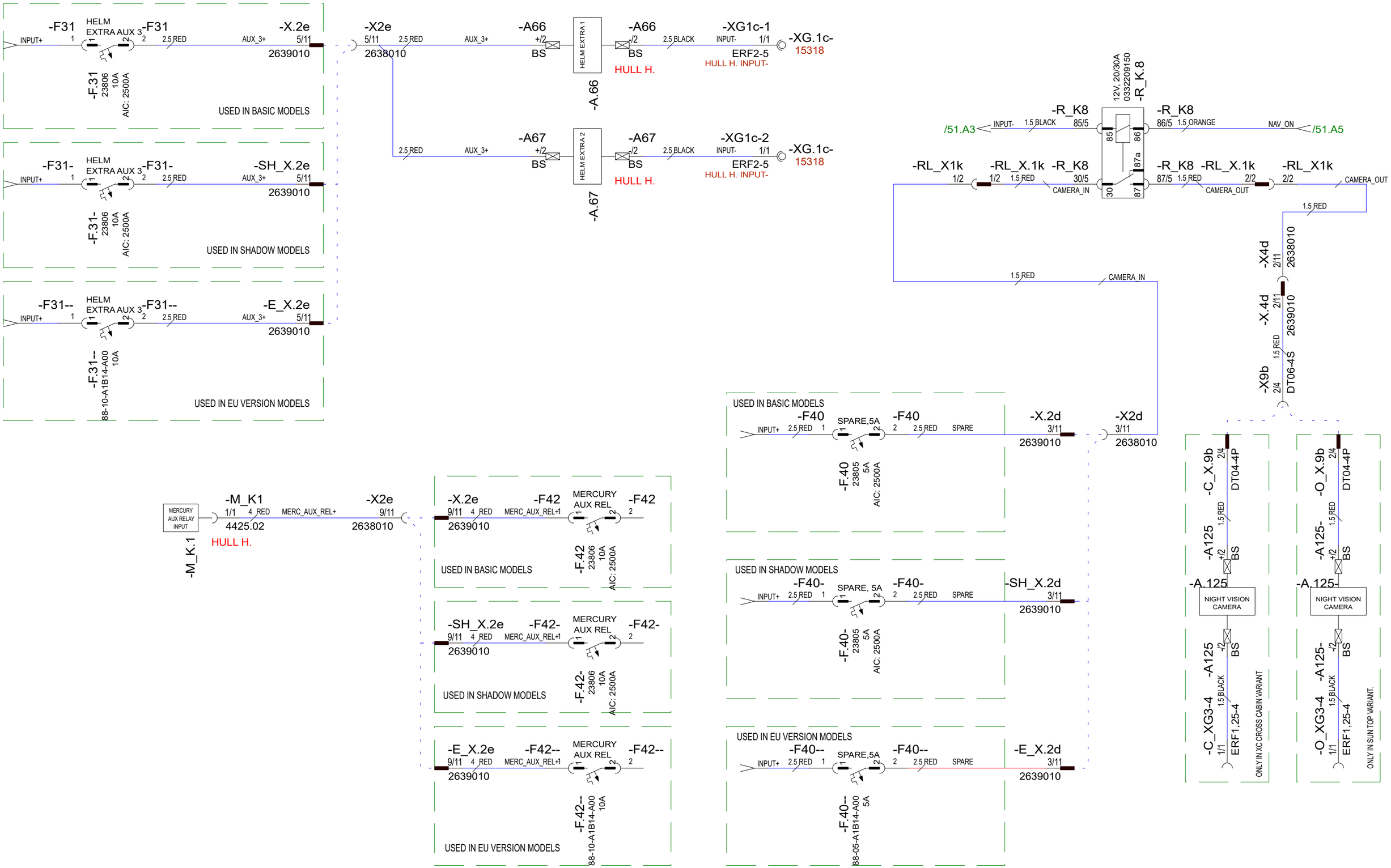

10.10.2023	PF	F22: 2004916; Not modified	Date	14.1.2019	NAVIX designed solutions	Axopar		
20.2.2024	PF	G23; 2005054; Not modified	Drawing by	TuM		Boat	Sub-product code	Product code	Project ID
18.6.2024	PF	G24: 2005139; Not modified	Sheet rev.	24		37 MY20	AUX 3, SPARE, EXTRA, MERCURY AUX - DIAGRAM	HL	83 / 210
Date of modification	Modified by	Description	Project rev.	G	Copyright by	Boat model	Title	Loc	Sheet

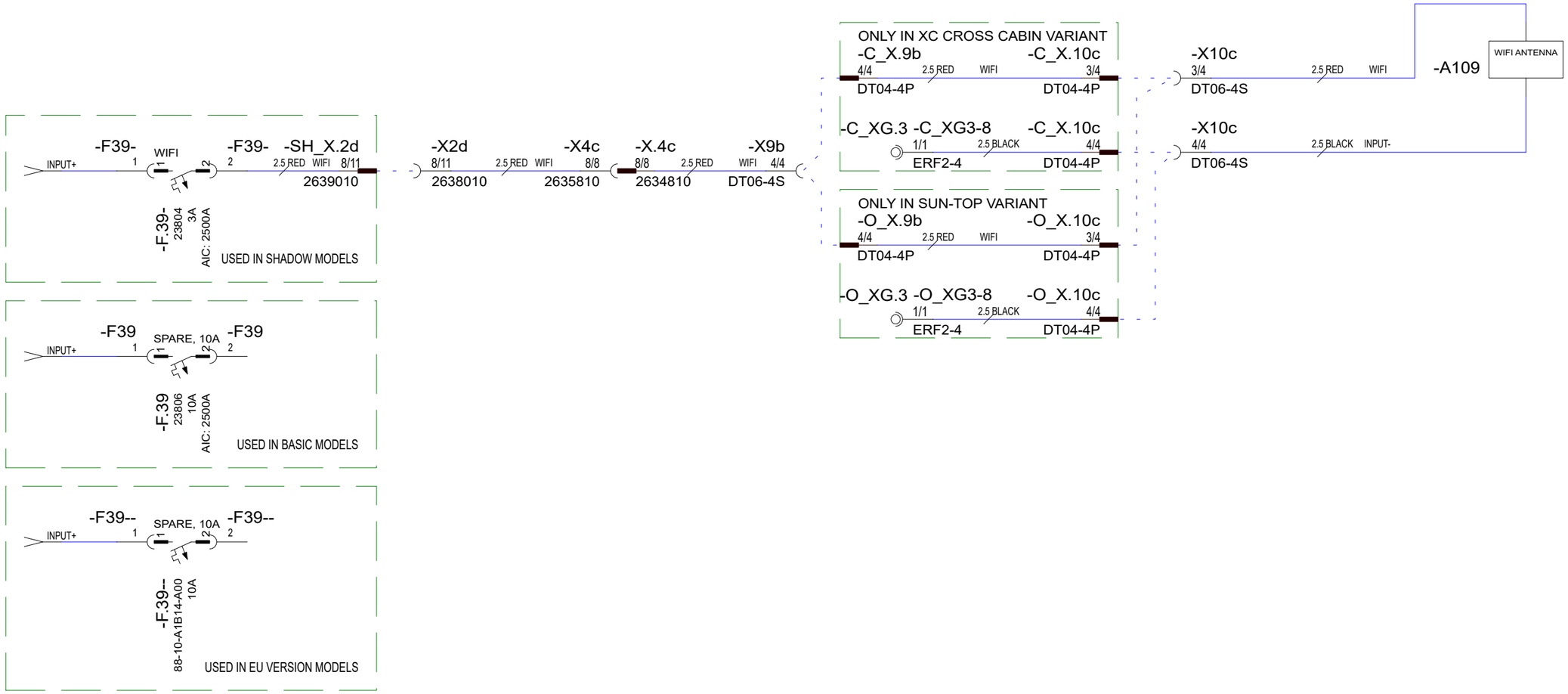

10.10.2023	PF	F22: 2004916; Not modified	Date 15.06.2021	NAVIX designed solutions	Axopar			
20.2.2024	PF	G23; 2005054; Wifi minus 1,5mm2->2,5mm2	Drawing by TuM		Boat	Sub-product code	Product code	Project ID
18.6.2024	PF	G24: 2005139; Not modified	Sheet rev. 24		37 MY20	WIFI - DIAGRAM	HL	84 / 210
Date of modification	Modified by	Description	Project rev. G	Copyright by	Boat model	Title	Loc	Sheet

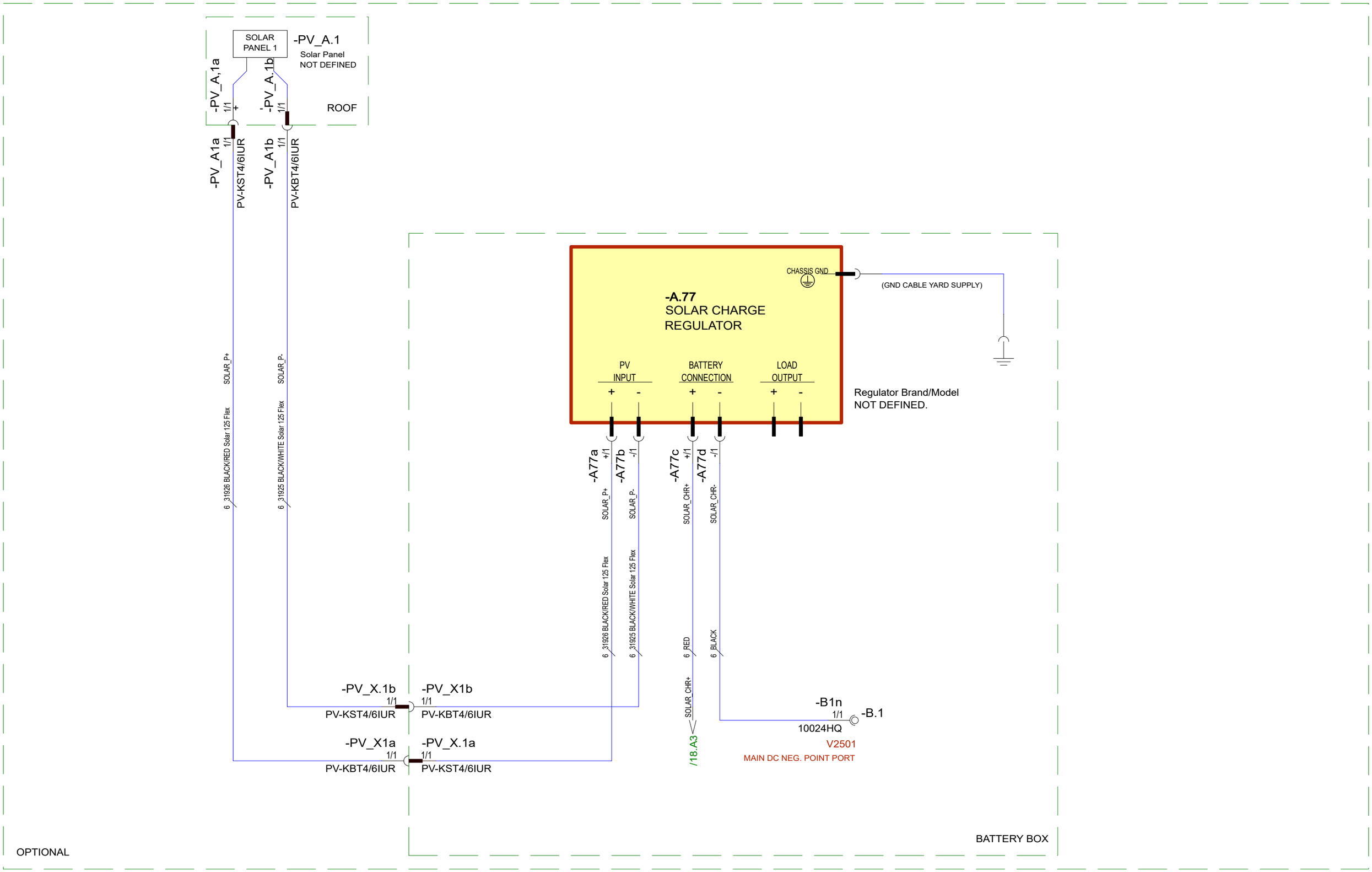

10.10.2023	PF	F22: 2004916; Not modified	Date	2.5.2019	NAVIX designed solutions	Axopar			
20.2.2024	PF	G23; 2005054; Not modified	Drawing by	TuM		Boat	Sub-product code	Product code	Project ID
18.6.2024	PF	G24: 2005139; Not modified	Sheet rev.	24		37 MY20	PHOTOVOLTAIC SYSTEM - DIAGRAM	HL	85 / 210
Date of modification	Modified by	Description	Project rev.	G	Copyright by	Boat model	Title	Loc	Sheet

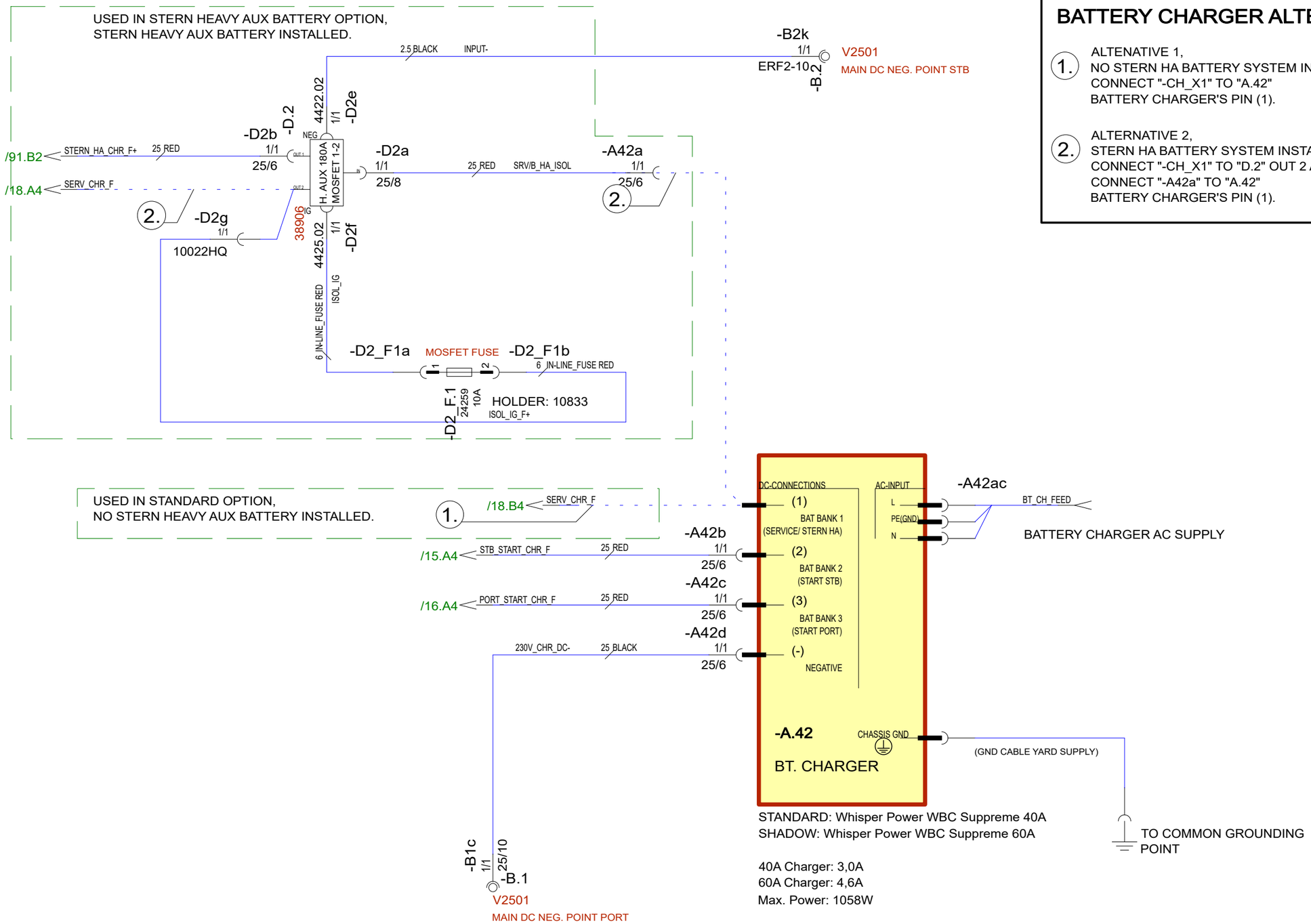

BATTERY CHARGER ALTERNATIVES:

1. ALTENATIVE 1,
NO STERN HA BATTERY SYSTEM INSTALLED:
CONNECT "-CH_X1" TO "A.42"
BATTERY CHARGER'S PIN (1).

2. ALTERNATIVE 2,
STERN HA BATTERY SYSTEM INSTALLED:
CONNECT "-CH_X1" TO "D.2" OUT 2 AND
CONNECT "-A42a" TO "A.42"
BATTERY CHARGER'S PIN (1).

STANDARD: Whisper Power WBC Suppreme 40A
SHADOW: Whisper Power WBC Suppreme 60A

40A Charger: 3,0A
60A Charger: 4,6A
Max. Power: 1058W

INCLUDES IN CHARGER OUTPUT:
50A FUSES/LINE WITH 40 CHARGER
80A FUSES/LINE WITH 60 CHARGER

LINE 1 (BANK 1) IS SEPARATE LINE

LINES 2 & 3 (BANKS 2 & 3) ARE PARALLEL LINES BUT SEPARATED WITH DIODES.

Date of modification	Modified by	Description
10.10.2023	PF	F22: 2004916; Not modified
20.2.2024	PF	G23; 2005054; Charging moved from bow th to stern th
18.6.2024	PF	G24: 2005139; Not modified

Date	14.1.2019
Drawing by	TuM
Sheet rev.	24
Project rev.	G

NAVIX designed solutions
Copyright by

Boat	Sub-product code	Product code	Project ID
Axopar			

Boat model	Title	Loc	Sheet
37 MY20	BATTERY CHARGER - DIAGRAM	HL	86 / 210

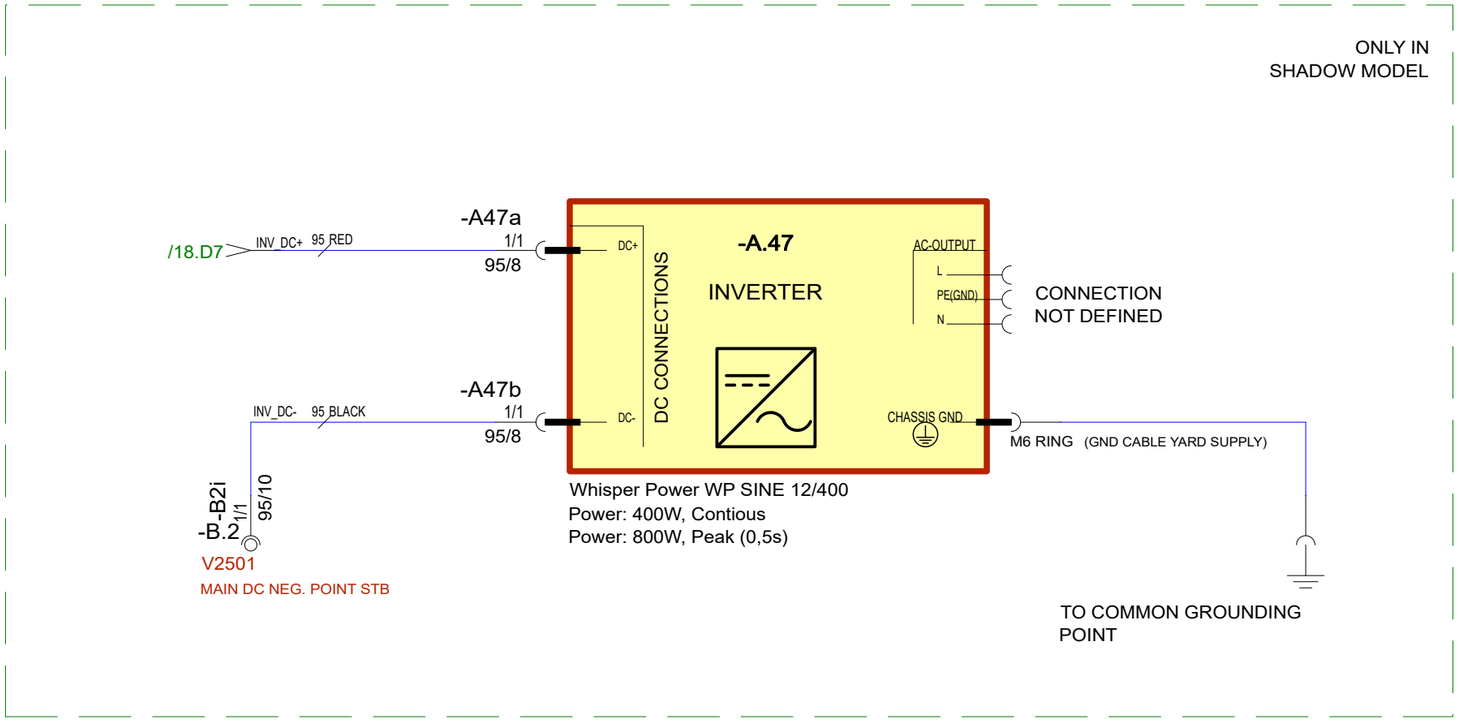

10.10.2023	PF	F22: 2004916; Not modified	Date	14.1.2019	NAVIX designed solutions	Axopar		
20.2.2024	PF	G23; 2005054; Not modified	Drawing by	TuM		Boat	Sub-product code	Product code	Project ID
18.6.2024	PF	G24: 2005139; Not modified	Sheet rev.	24		37 MY20	INVERTER - DIAGRAM	HL	87 / 210
Date of modification	Modified by	Description	Project rev.	G	Copyright by	Boat model	Title	Loc	Sheet

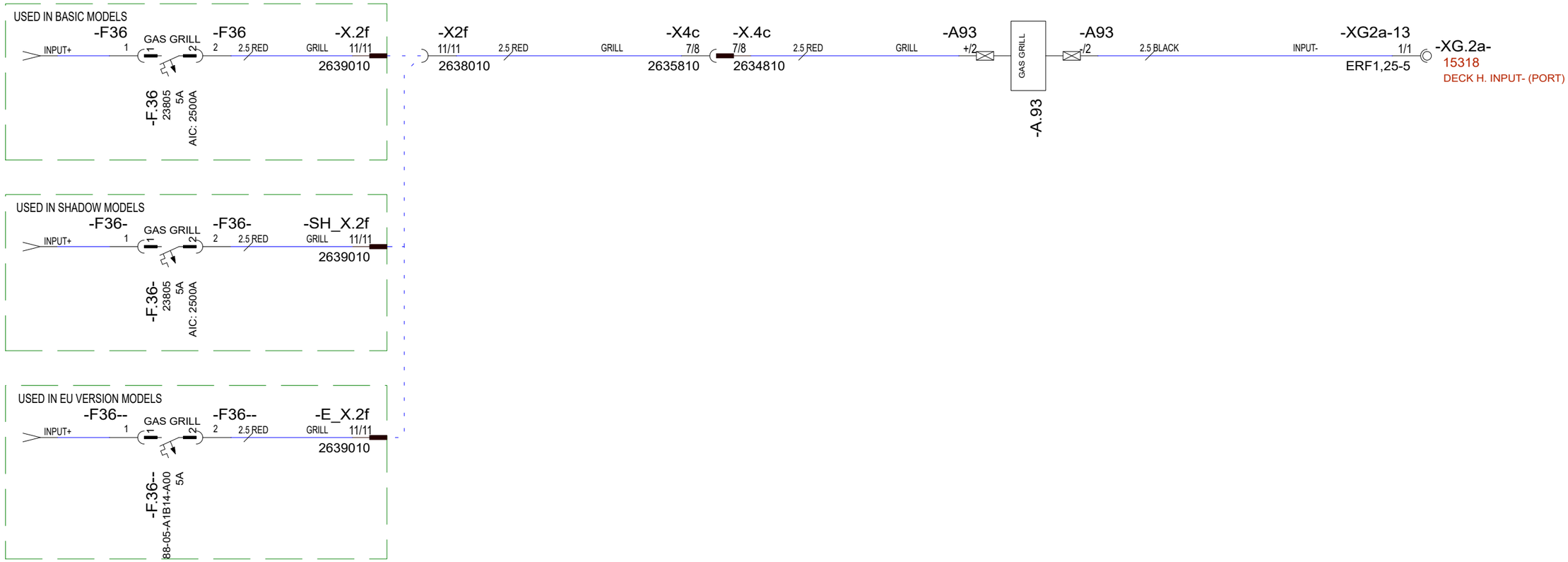

10.10.2023	PF	F22: 2004916; Not modified	Date	28.08.2020	NAVIX designed solutions	Axopar			
20.2.2024	PF	G23; 2005054; Not modified	Drawing by	TuM		Boat	Sub-product code	Product code	Project ID
18.6.2024	PF	G24: 2005139; Not modified	Sheet rev.	24		37 MY20	GAS GRILL - DIAGRAM	HL	88 / 210
Date of modification	Modified by	Description	Project rev.	G	Copyright by	Boat model	Title	Loc	Sheet

10.10.2023	PF	F22: 2004916; Not modified	Date	15.04.2021	NAVIX designed solutions	Axopar			
20.2.2024	PF	G23; 2005054; Not modified	Drawing by	AR		Boat	Sub-product code	Product code	Project ID
18.6.2024	PF	G24: 2005139; Not modified	Sheet rev.	24		37 MY20 SHADOW	BATT.PACK MAIN SWITCH HARNESS	HL	89 / 210
Date of modification	Modified by	Description	Project rev.	G	Copyright by	Boat model	Title	Loc	Sheet

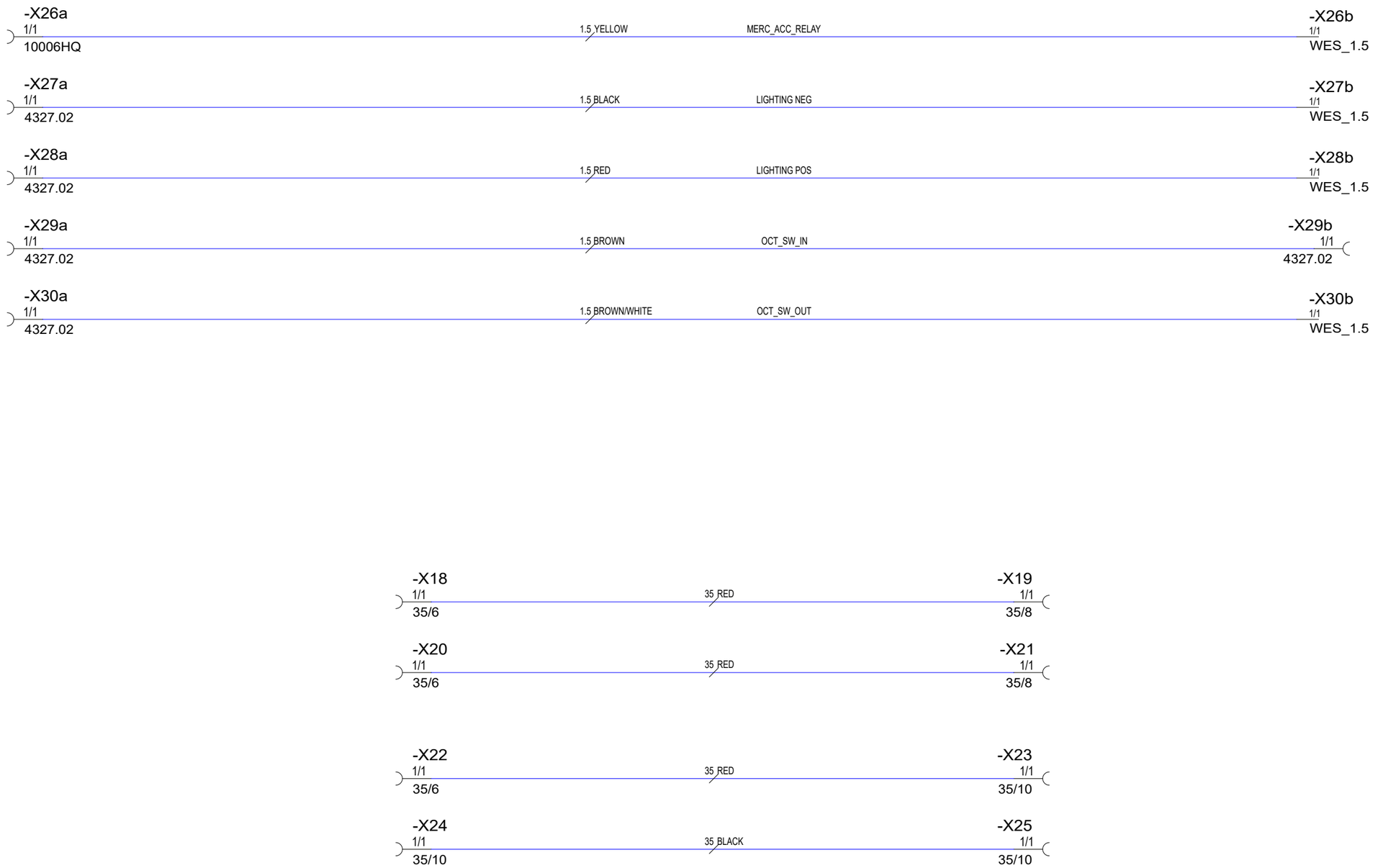

10.10.2023	PF	F22: 2004916; Not modified	Date	9.2.2023	NAVIX designed solutions	Axopar		
20.2.2024	PF	G23; 2005054; Not modified	Drawing by	TT		Boat	Sub-product code	Product code / Project ID
18.6.2024	PF	G24: 2005139; Not modified	Sheet rev.	24		37 MY20 SHADOW	OCTO POWER ZERO EMISSION PWR PACK	HL
Date of modification	Modified by	Description	Project rev.	G	Copyright by	Boat model	Title	Loc / Sheet: 90 / 210

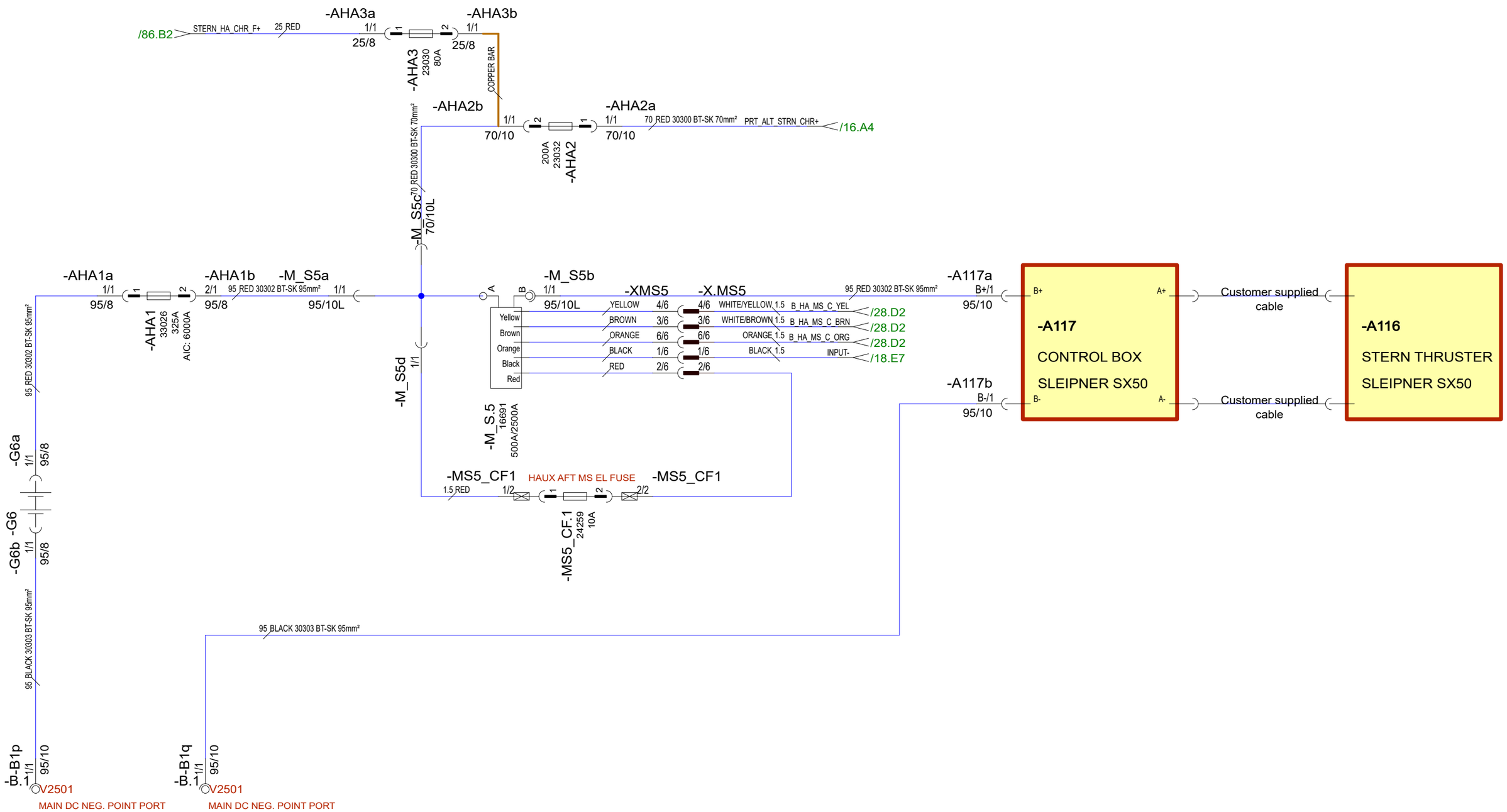

Date of modification	Modified by	Description
8.4.2024	PF	G23; 2005054; Added stern thruster
18.6.2024	PF	G24: 2005139; Not modified

Date	20.2.2024
Drawing by	PF
Sheet rev.	24
Project rev.	G

NAVIX designed solutions

Copyright by

Boat	Sub-product code	Product code	Project ID
Axopar			
Boat model	Title	Loc	Sheet
37 MY20 SHADOW	STERN THRUSTER - DIAGRAM	HL	91/ 210

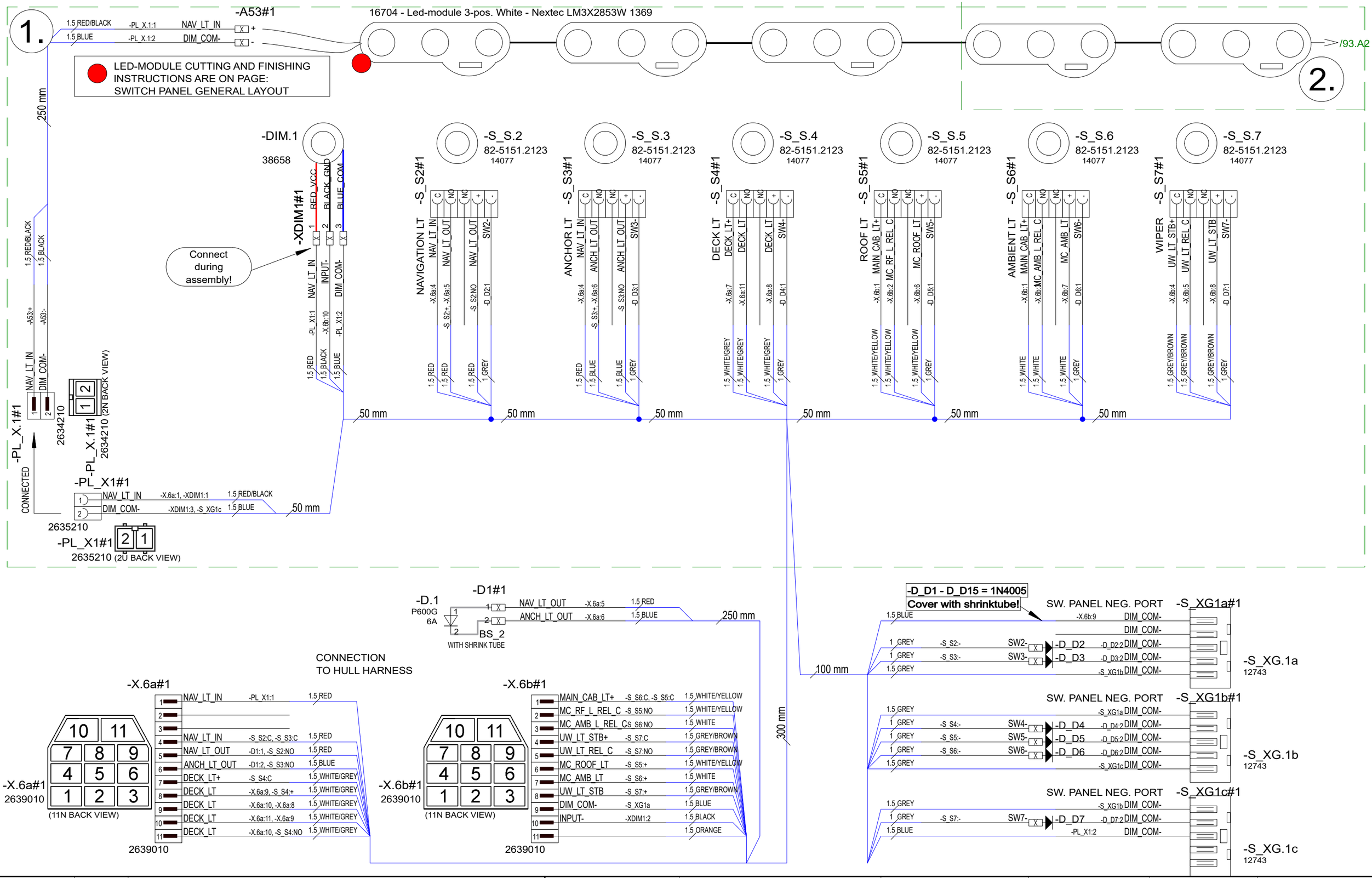

Date of modification	Modified by	Description
16.10.2023	PF	F8: 2004916; Added dimming feature, F9: Bilge halo dimming removed
15.03.2024	PF	G10:2005054; Added s15, S1 replaced with dimmer, test instruction update
17.2.2023	RK	F7: NOT MODIFIED.

Date	22.5.2019
Drawing by	TuM
Sheet rev.	10
Project rev.	G

NAVIX designed solutions
Copyright by

Axopar	SEE EXP VIEW	29211	
Boat	Sub-product code	Product code	Project ID
37 MY20	SWITCH PANEL	HL	92 / 210
Boat model	Title	Loc	Sheet

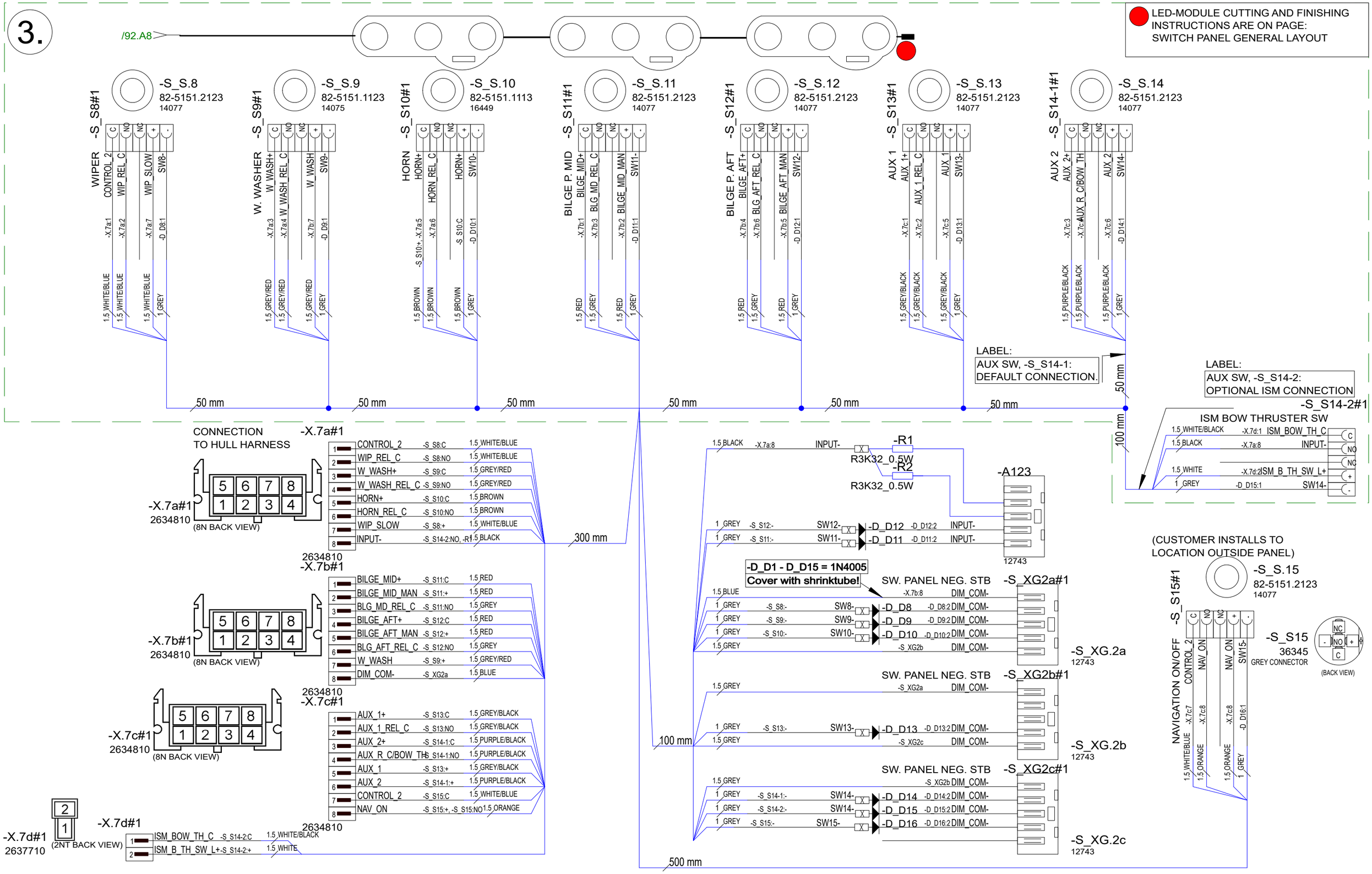

Date of modification	Modified by	Description
16.10.2023	PF	F8: 2004916; Added dimming feature, F9: Bilge halo dimming removed
15.03.2024	PF	G10:2005054; Added s15, S1 replaced with dimmer, test instruction update
17.2.2023	RK	F7: NOT MODIFIED.

Date	22.5.2019
Drawing by	TuM
Sheet rev.	10
Project rev.	G

NAVIX designed solutions

Copyright by

Axopar	SEE EXP VIEW	29211	
Boat	Sub-product code	Product code	Project ID
37 MY20	SWITCH PANEL	HL	93 / 210
Boat model	Title	Loc	Sheet

SWITCH PANEL GENERAL LAYOUT / LED MODULE CUTTING & FINISHING

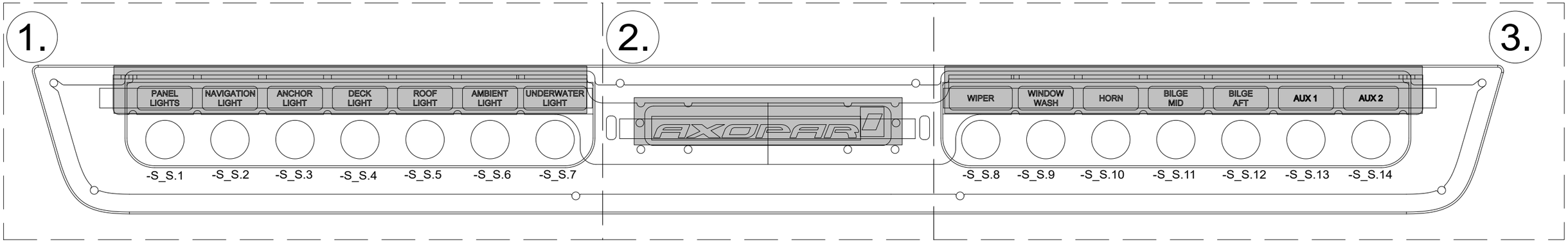

16704 - Led-module 3-pos. White - Nextec LM3X2853W 1369

BUNDLE EXTRA WIRING BETWEEN MODULES TO THE LOOPS AND STRING WITH ZIP TIES

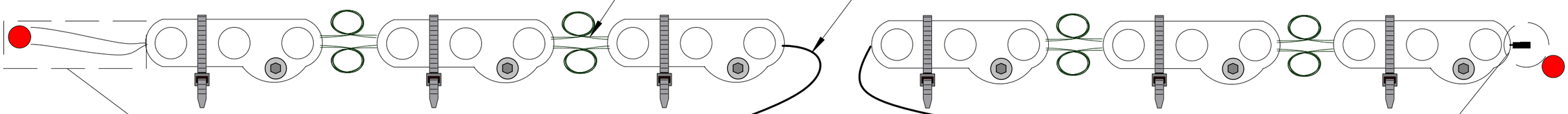

CUT LED MODULES INPUT SIDE OF THE WIRES APPROX. 60mm LENGTH
(SHOULD BE ABOUT THE CENTER POS. BETWEEN 2 MODULES)

STRIP WIRE ENDS APPROX. 7mm AND CRIMP WIRES TO THE BUTT SPLICE CONNECTORS -A53.

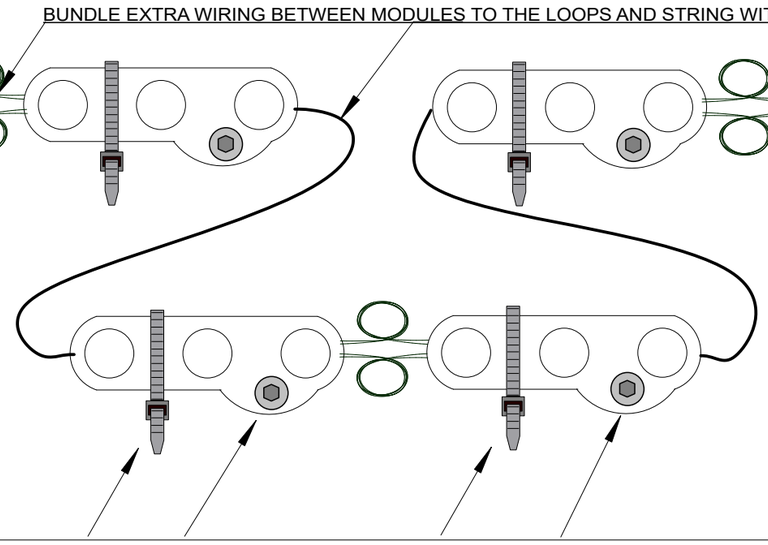

ATTACH ALL LED MODULES TO THE BRACKET 36371 WITH M3X12 BH HEX BOLT A4, NUT M3 AND 2-SIDED TAPE. ADD CABLE TIE. SEE ALSO EXP. VIEW

TURN THE ENDS OF CABLE TIES TOWARDS TO THE PANEL!

1. CUT THE WIRES APPROX. 40mm. (JUST CUT, DO NOT STRIP!)

2. BEND THE WIRES TO THE SHAPE OF "U".

3. ADD APPROX. 20mm OF HEAT SHRINK TUBE "17418" OVER THE BENDED WIRES.

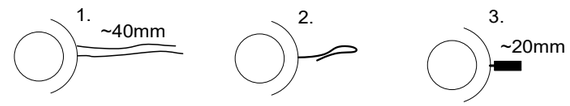

HOW TO BUNDLE EXTRA WIRING BETWEEN MODULES TO THE LOOPS AND STRING WITH ZIP TIES

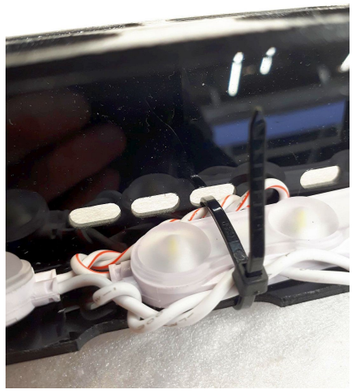

NOTICE!
VERIFY THAT ALL CABLES HAVE MARKINGS SHOWN IN EXAMPLE BELOW.

EXEMPTION:
ALL <500mm WIRES AND BLACK WIRES THIS MARKING IS NOT NEEDED.

MARKING

R2 ISO 6722 100V AWG16 +100 C

CABLE

EXAMPLE: RED 1,5mm2 WIRE MARKINGS.

Date of modification	Modified by	Description
16.10.2023	PF	F8: 2004916; Added dimming feature, F9: Bilge halo dimming removed
15.03.2024	PF	G10:2005054; Added s15, S1 replaced with dimmer, test instruction update
17.2.2023	RK	F7: NOT MODIFIED.

Date	22.5.2019
Drawing by	TuM
Sheet rev.	10
Project rev.	G

NAVIX designed solutions
Copyright by

Axopar Boat	SEE EXP VIEW Sub-product code	29211 Product code	Project ID
37 MY20 Boat model	SWITCH PANEL Title	HL Loc	94 / 210 Sheet

29211_AXOPAR_37_MY20_SWITCH_PANEL

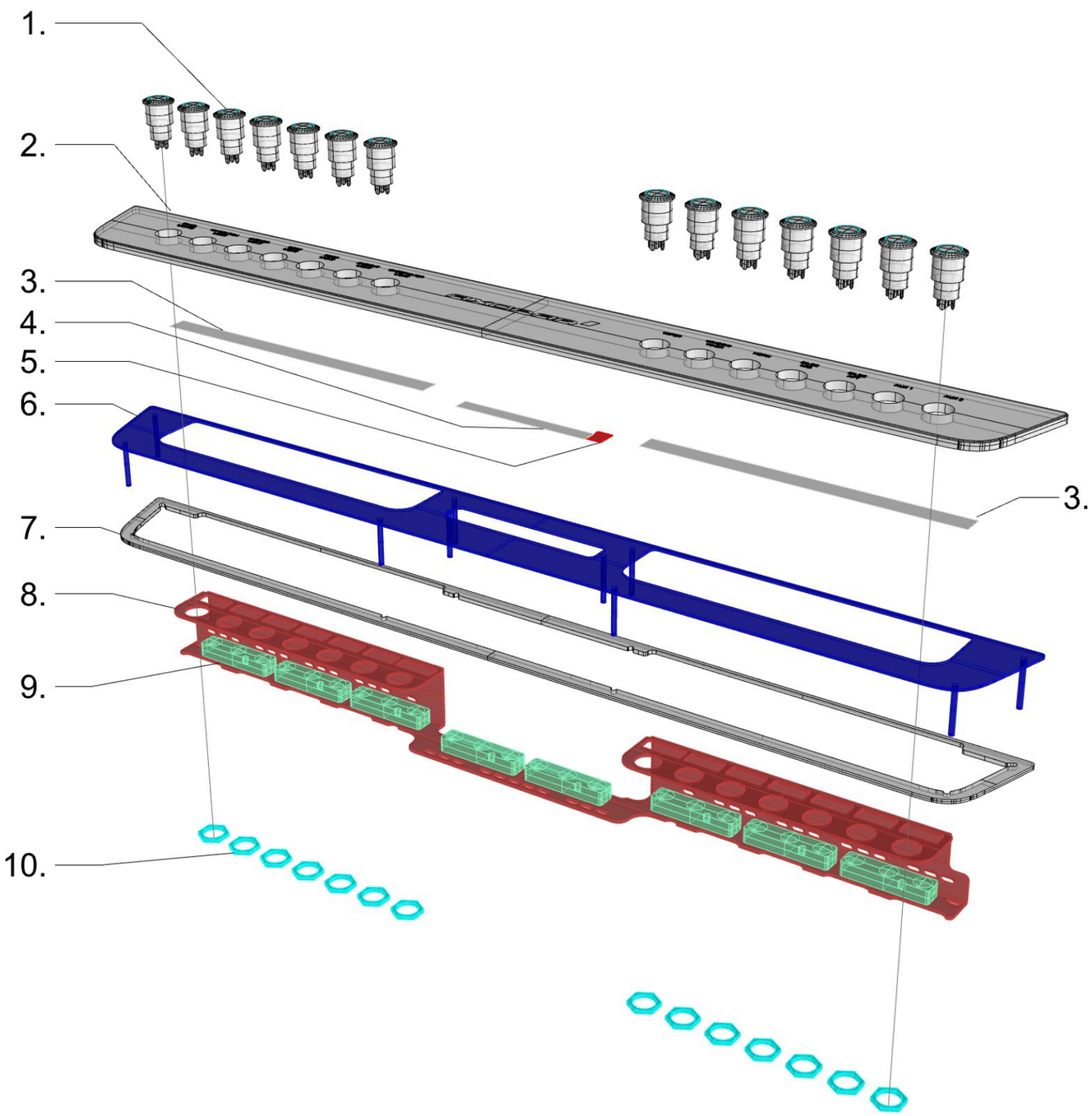

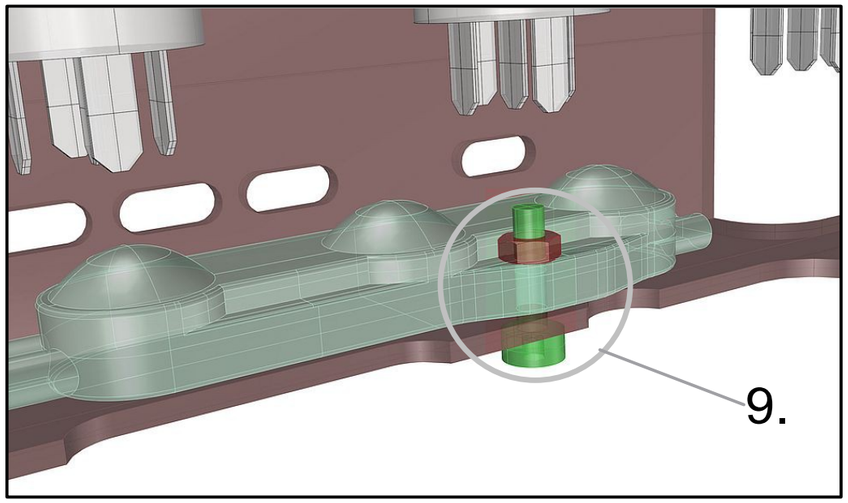

29211_AXOPAR_37_MY20_SWITCH_PANEL

1. 14PCS HALO SWITCH (AS IN DIAGRAM)

2. 1PCS 29767_AXOPAR_37_MY20_ACRYL_SWITCH_PANEL_(WOC)

3. 2PCS 29771_AXOPAR_37_MY20_SWITCH_PANEL_TEXT_STICKER
(PLACE BEHIND THE TEXT AREA IN 29767)

4. 1PC 23722_AXOPAR_28_SWITCH_PANEL_LOGO_WHITE_STICKER
(PLACE BEHIND THE TEXT AREA IN 29767)

5. 1PC 23723_AXOPAR_28_SWITCH_PANEL_LOGO_RED_STICKER
(PLACE BEHIND THE TEXT AREA IN 29767)

6. 1PC 29768_AXOPAR_37_MY20_SWITCH_PANEL_METAL_BACK_FRAME
ATTACH TO 29767 WITH BLACK MS-POLYMER GLUE

7. 1PC 29769_AXOPAR_37_MY20_SWITCH_PANEL_GASKET_(WOC)
GLUE WITH 2-SIDED TAPE TO THE BACKSIDE OF 29768

8. 1PC 36371_AXOPAR_SWITCH_PANEL_LED_MODULE_BRACKET_(WOC)

9. 8PCS 16704 LED MODULE WHITE ATTATCH TO 36371 WITH M3X12 BH HEX BOLT A4 AND NUT
ATTACH TO BRACKET WITH CABLE TIES AND 2-SIDED TAPE

10. 14PCS HALO SWITCH NUT

TE 20.05.2019
TE 11.09.2019
JSC 18.10.2019
MN 18.11.2019
TE 11.01.2022
HL 11.03.2022

EXP VIEW

Date of modification	Modified by	Description
16.10.2023	PF	F8: 2004916; Added dimming feature, F9: Bilge halo dimming removed
15.03.2024	PF	G10:2005054; Added s15, S1 replaced with dimmer, test instruction update
17.2.2023	RK	F7: NOT MODIFIED.

Date	22.5.2019
Drawing by	TuM
Sheet rev.	10
Project rev.	G

NAVIX designed solutions
Copyright by

Axopar Boat	SEE EXP VIEW Sub-product code	29211 Product code	Project ID
37 MY20 Boat model	SWITCH PANEL Title	HL Loc	95 / 210 Sheet

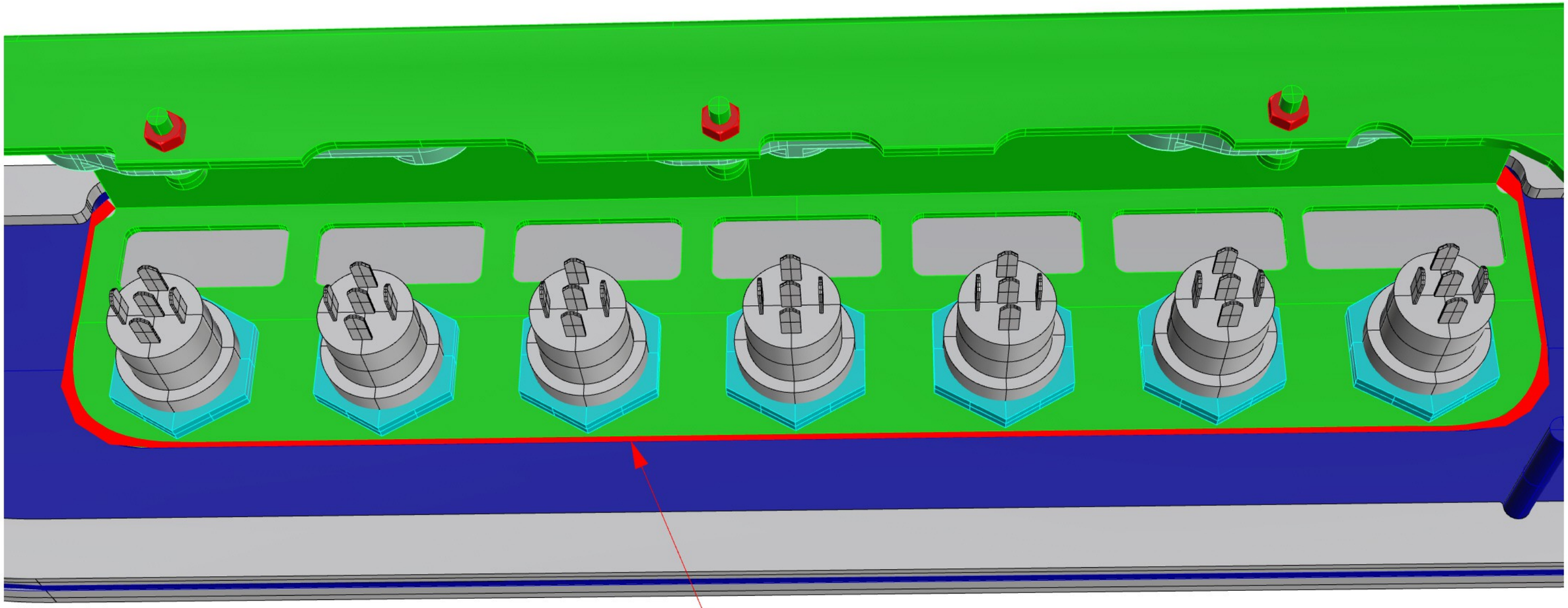

FILL THE CAP BETWEEN
METAL FRAME AND LED BRACKET
WITH 21119 MS-POLYMER BLACK GLUE
GLUE MUST BE FLUSH WITH PANELS

16.10.2023	PF	F8: 2004916; Added dimming feature, F9: Bilge halo dimming removed	Date	22.5.2019	NAVIX designed solutions	Axopar	SEE EXP. VIEW	29211
15.03.2024	PF	G10:2005054; Added s15, S1 replaced with dimmer, test instruction update	Drawing by	TuM		Boat	Sub-product code	Product code
17.2.2023	RK	F7: NOT MODIFIED	Sheet rev.	10		37 MY20	SWITCH PANEL	HL
Date of modification	Modified by	Description	Project rev.	G	Copyright by	Boat model	Title	Loc

Project ID

96 / 210
Sheet

Axopar 37 MY20 SWITCH PANEL 29211 INSPECTION SHEET

PRUDUCT LABEL

TEST

1) S2, S3, S4 should be pressed. No other buttons may be pressed during entire test. Power source off.
2) Connect -X.6b/9 and -X.7b/8 with a wire.
3) Connect positive (+12V) to connectors listed below
4) Connect negative (-) to -X.6b/10 and -X.7a/8. Turn power on.
5) Observe, change brightness and turn on/off by pressing DIM1. Panel lights and switch halos must illuminate. S11 and S12 should illuminate constantly with full brightness, all other lights should turn on/off/dim from DIM1.

Connect positive (+)
X.6a/1
X.6a/4
X.6a/7
X.6b/6
X.6b/7
X.6b/8
X.7a/7
X.7b/7
X.7a/5
X.7b/2
X.7b/5
X.7c/5
X.7c/6
X.7d/2

Connect negative (-)
X.6b/10
X.7a/8

PASS / FAIL

DATE _____

TESTED BY _____

TEST INSTRUCTIONS

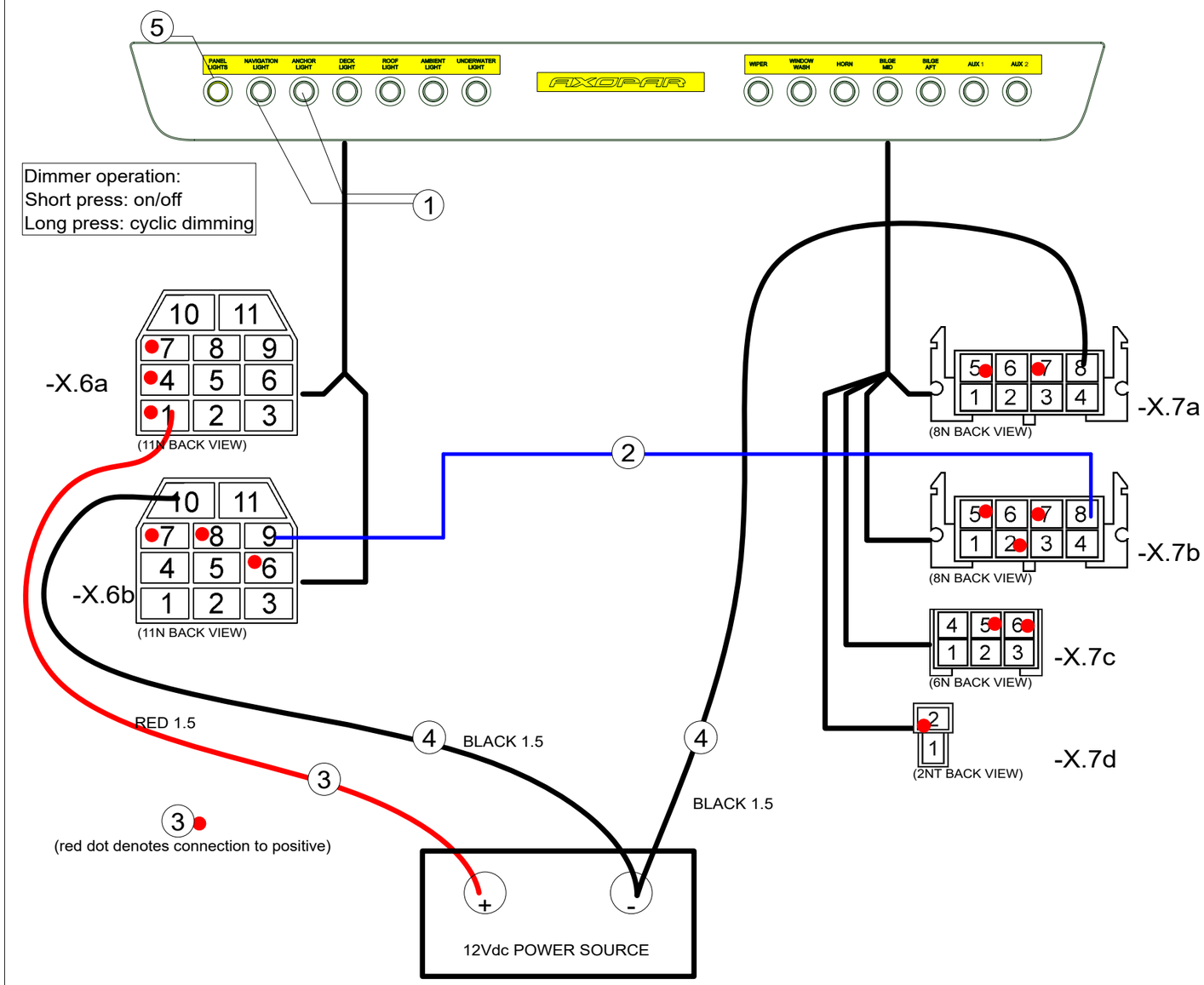

Date of modification	Modified by	Description
16.10.2023	PF	F8: 2004916; Added dimming feature, F9: Bilge halo dimming removed
15.03.2024	PF	G10:2005054; Added s15, S1 replaced with dimmer, test instruction update
17.2.2023	RK	F7: NOT MODIFIED.

Date	22.5.2019
Drawing by	TuM
Sheet rev.	10
Project rev.	G

NAVIX designed solutions
Copyright by

Axopar	SEE EXP VIEW	29211	
Boat	Sub-product code	Product code	Project ID
37 MY20	SWITCH PANEL	HL	97 / 210
Boat model	Title	Loc	Sheet

HARNESS GENERAL LAYOUT

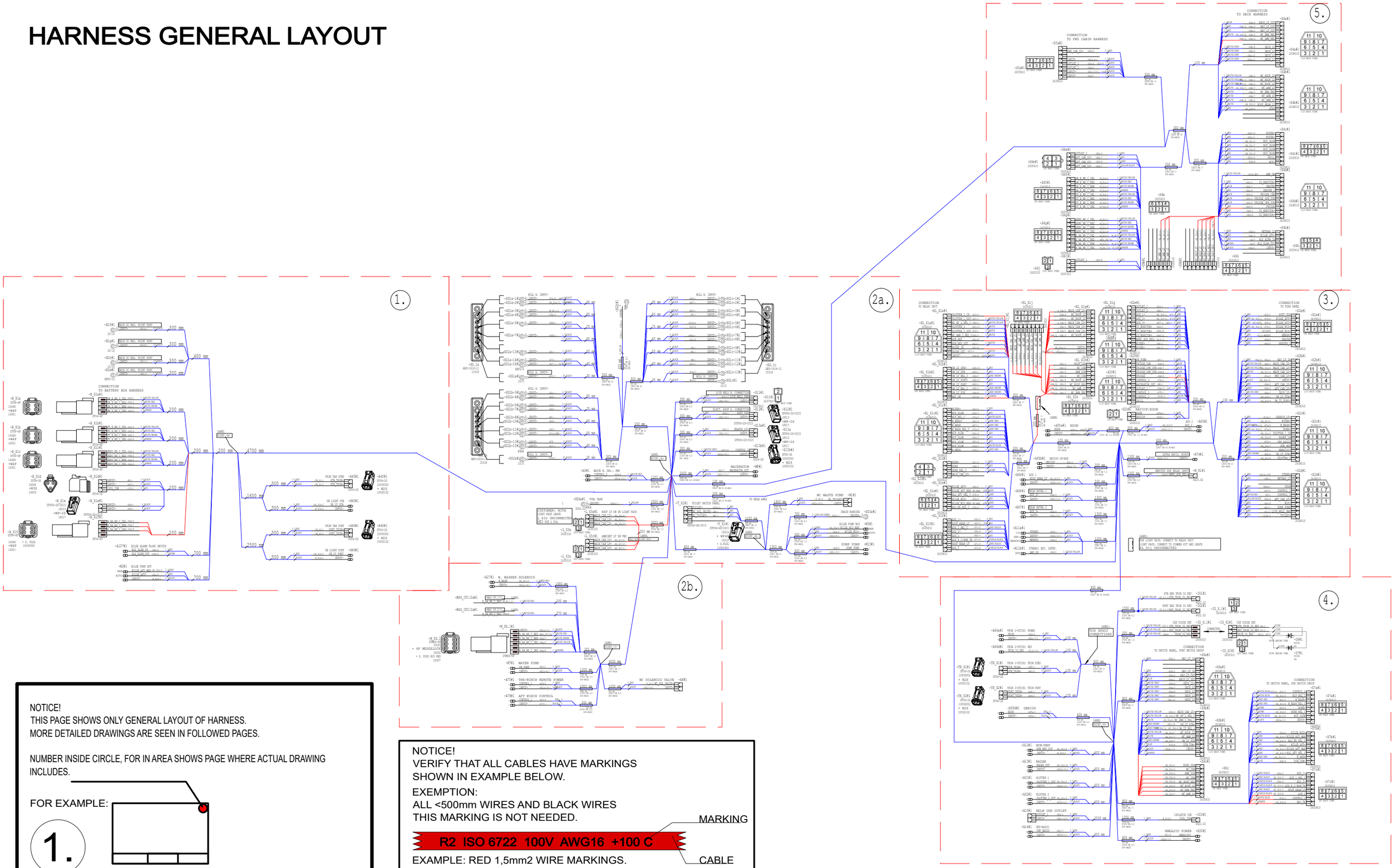

NOTICE!
THIS PAGE SHOWS ONLY GENERAL LAYOUT OF HARNESS.
MORE DETAILED DRAWINGS ARE SEEN IN FOLLOWED PAGES.

NUMBER INSIDE CIRCLE, FOR IN AREA SHOWS PAGE WHERE ACTUAL DRAWING INCLUDES.

FOR EXAMPLE:

1.

NOTICE!
VERIFY THAT ALL CABLES HAVE MARKINGS
SHOWN IN EXAMPLE BELOW.
EXEMPTION:
ALL <500mm WIRES AND BLACK WIRES
THIS MARKING IS NOT NEEDED.

R2 ISO 6722 100V AWG16 +100 C

MARKING

CABLE

EXAMPLE: RED 1,5mm2 WIRE MARKINGS.

16.10.2023	PF	F11: 2004916; Added X4j & DIM_COM- wire	Date	20.5.2019	NAVIX designed solutions	Axopar		29585	
11.3.2024	PF	G12: 2005054; Added/mod connections to deck h., rel. unit, lt switches, swp	Drawing by	TuM		Boat	Sub-product code	Product code	Project ID
17.2.2023	RK	F10: SEVERAL MODIFICATIONS.	Sheet rev.	12		37 MY20	HULL HARNESS	HL	98 / 210
Date of modification	Modified by	Description	Project rev.	G	Copyright by	Boat model	Title	Loc	Sheet

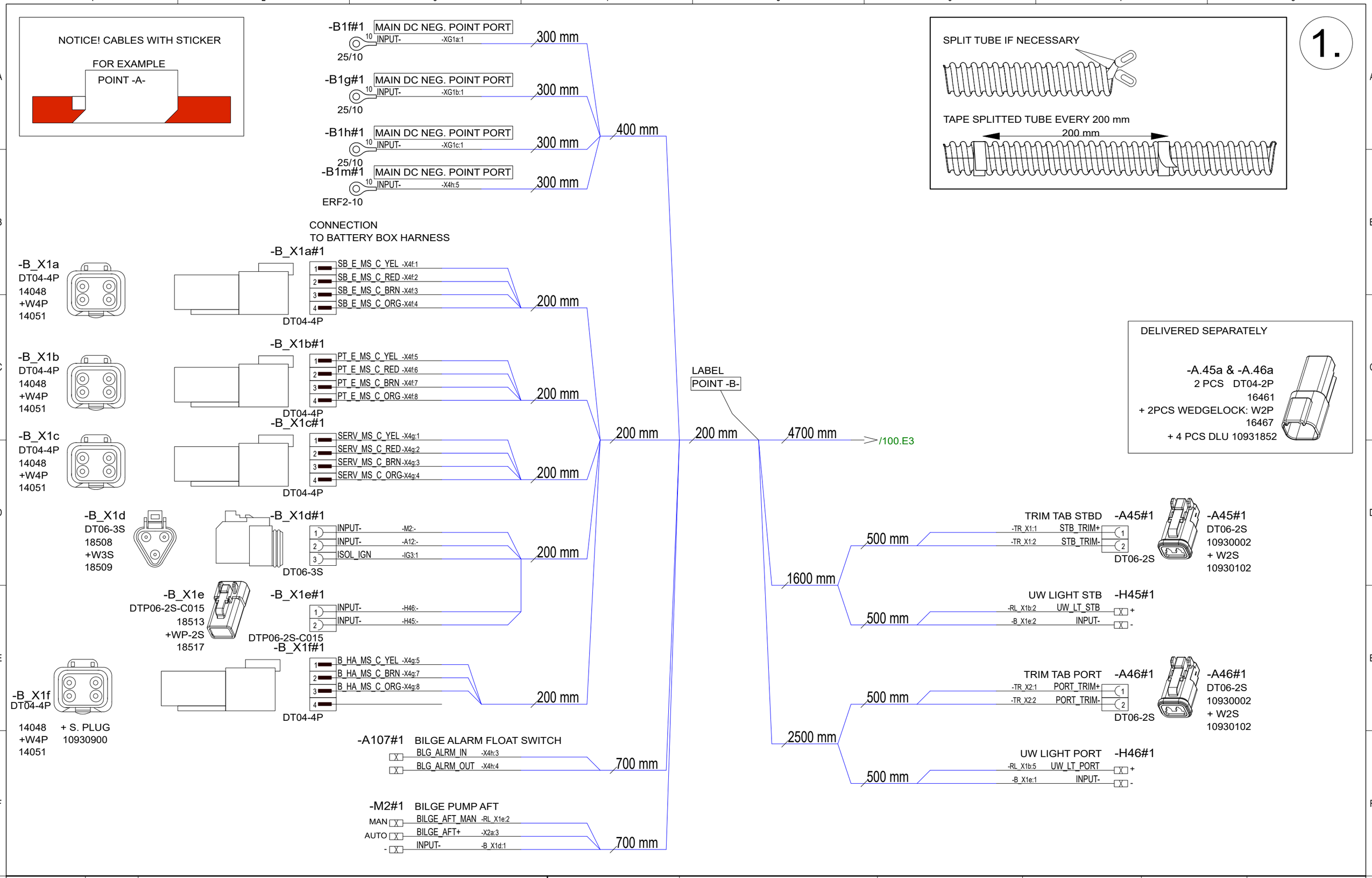

Date of modification	Modified by	Description
16.10.2023	PF	F11: 2004916; Added X4j & DIM_COM- wire
11.3.2024	PF	G12: 2005054; Added/mod connections to deck h., rel. unit, lt switches, swp
17.2.2023	RK	F10: SEVERAL MODIFICATIONS.

Date	20.5.2019
Drawing by	TuM
Sheet rev.	12
Project rev.	G

NAVIX designed solutions

Axopar		29585	
Boat	Sub-product code	Product code	Project ID
37 MY20	HULL HARNESS	HL	99 / 210
Boat model	Title	Loc	Sheet

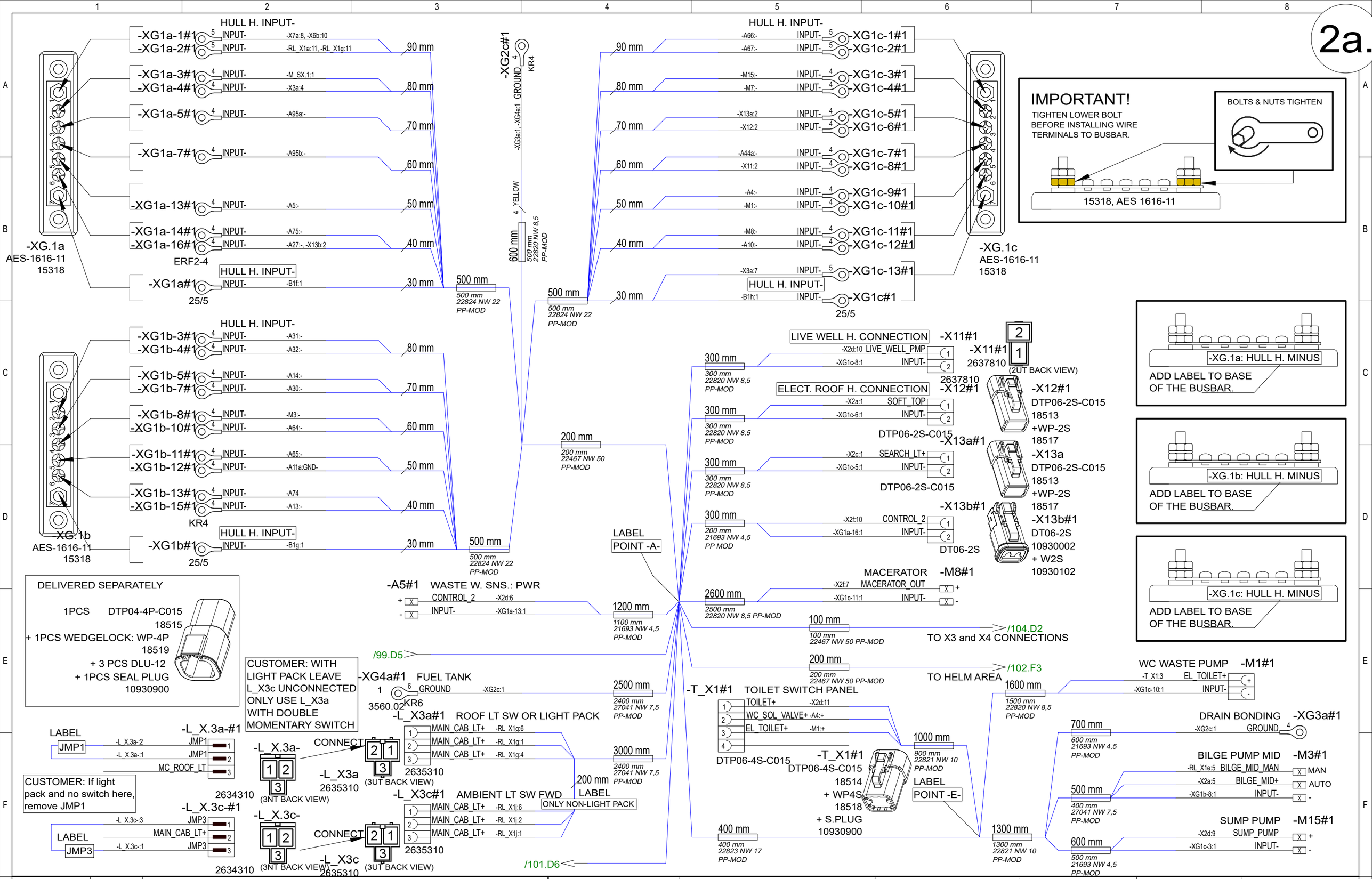

16.10.2023	PF	F11: 2004916; Added X4j & DIM_COM- wire	Date	20.5.2019	NAVIX designed solutions	Axopar		29585
11.3.2024	PF	G12: 2005054; Added/mod connections to deck h., rel. unit, lt switches, swp	Drawing by	TuM		Boat	Sub-product code	Product code / Project ID
17.2.2023	RK	F10: SEVERAL MODIFICATIONS.	Sheet rev.	12		37 MY20	HULL HARNESS	HL
Date of modification	Modified by	Description	Project rev.	G	Copyright by	Boat model	Title	Loc / 100 / 210 Sheet

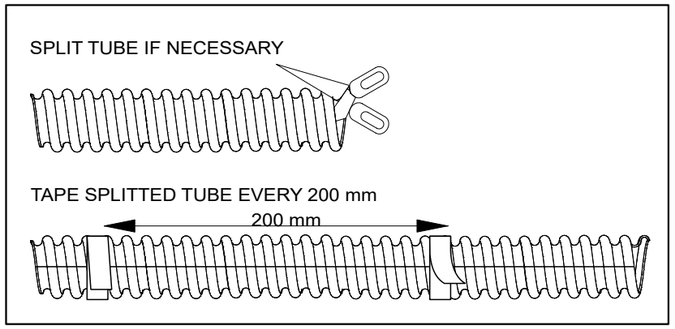

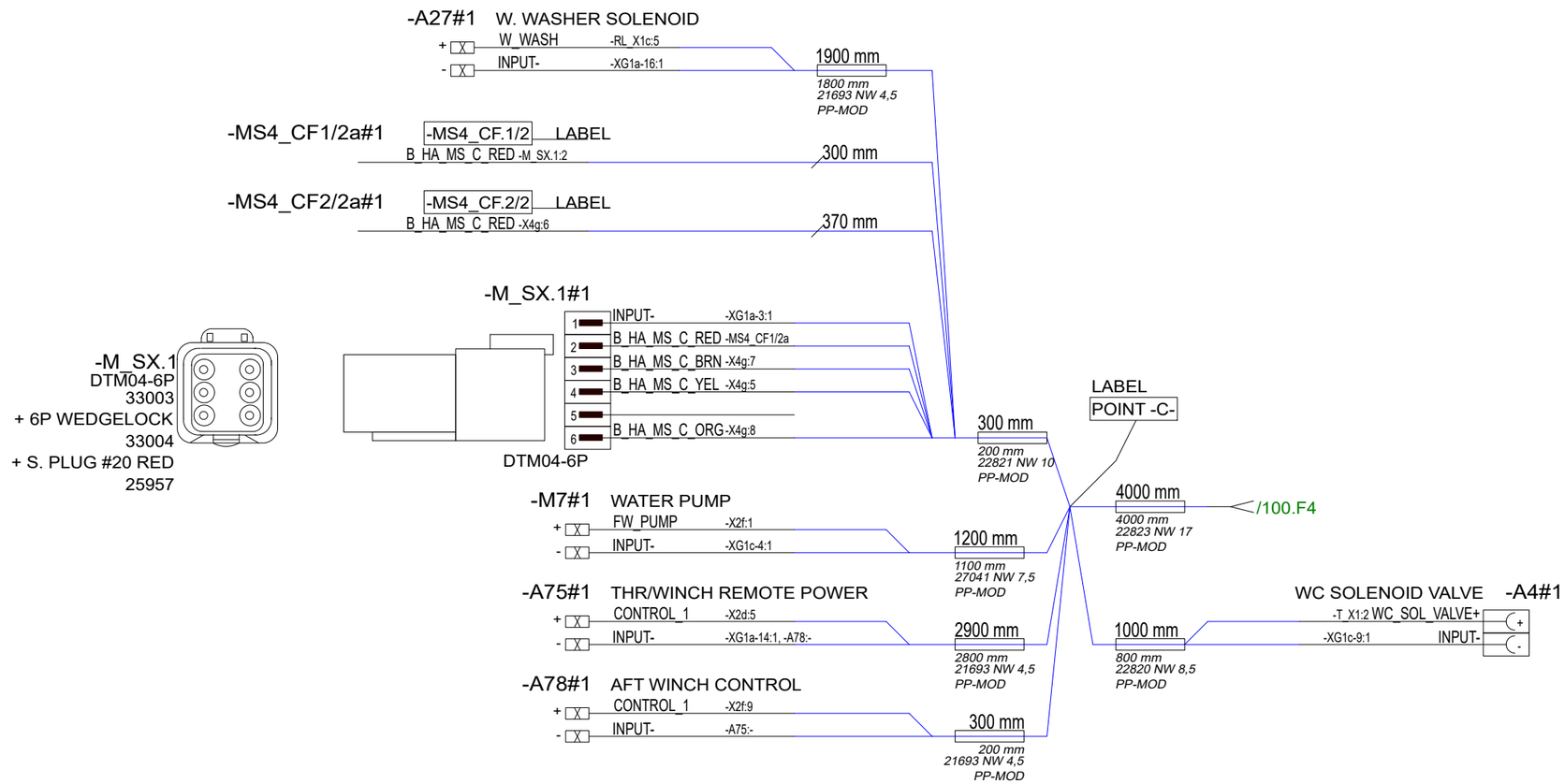

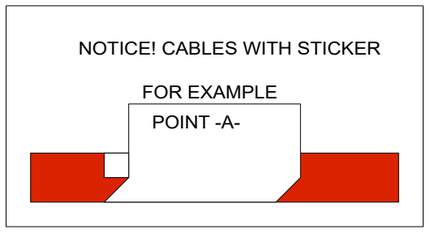

16.10.2023	PF	F11: 2004916; Added X4j & DIM_COM- wire	Date	31.08.2020	NAVIX designed solutions	Axopar		29585	
11.3.2024	PF	G12: 2005054; Added/mod connections to deck h., rel. unit, lt switches, swp	Drawing by	TuM		Boat	Sub-product code	Product code	Project ID
17.2.2023	RK	F10: SEVERAL MODIFICATIONS.	Sheet rev.	12		37 MY20	HULL HARNESS	HL	101/ 210
Date of modification	Modified by	Description	Project rev.	G	Copyright by	Boat model	Title	Loc	Sheet

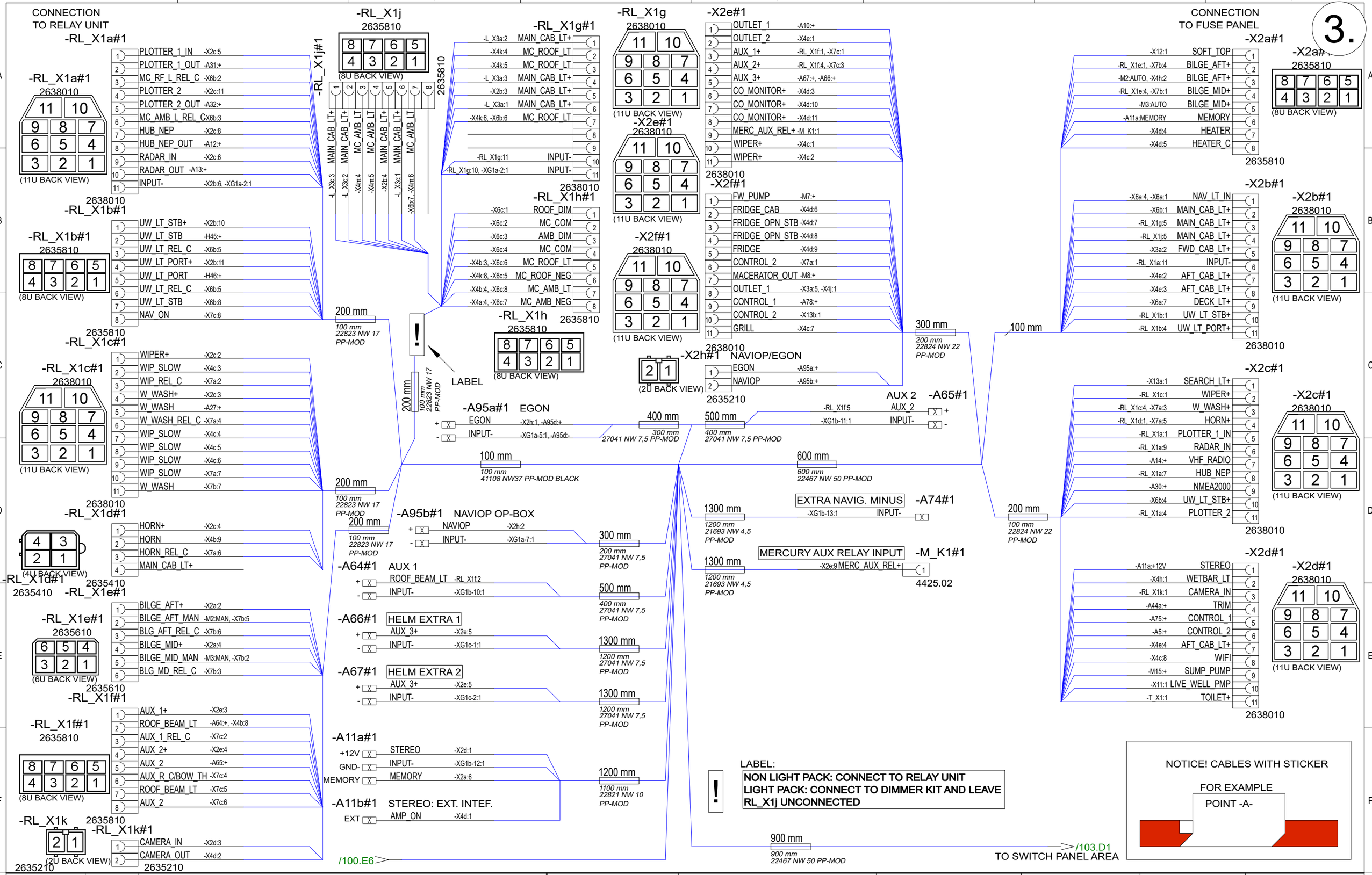

Date of modification	Modified by	Description
16.10.2023	PF	F11: 2004916; Added X4j & DIM_COM- wire
11.3.2024	PF	G12: 2005054; Added/mod connections to deck h., rel. unit, lt switches, swp
17.2.2023	RK	F10: SEVERAL MODIFICATIONS.

Date	20.5.2019
Drawing by	TuM
Sheet rev.	12
Project rev.	G

NAVIX designed solutions

Copyright by

Axopar		29585	
Boat	Sub-product code	Product code	Project ID
37 MY20	HULL HARNESS	HL	102 / 210
Boat model	Title	Loc	Sheet

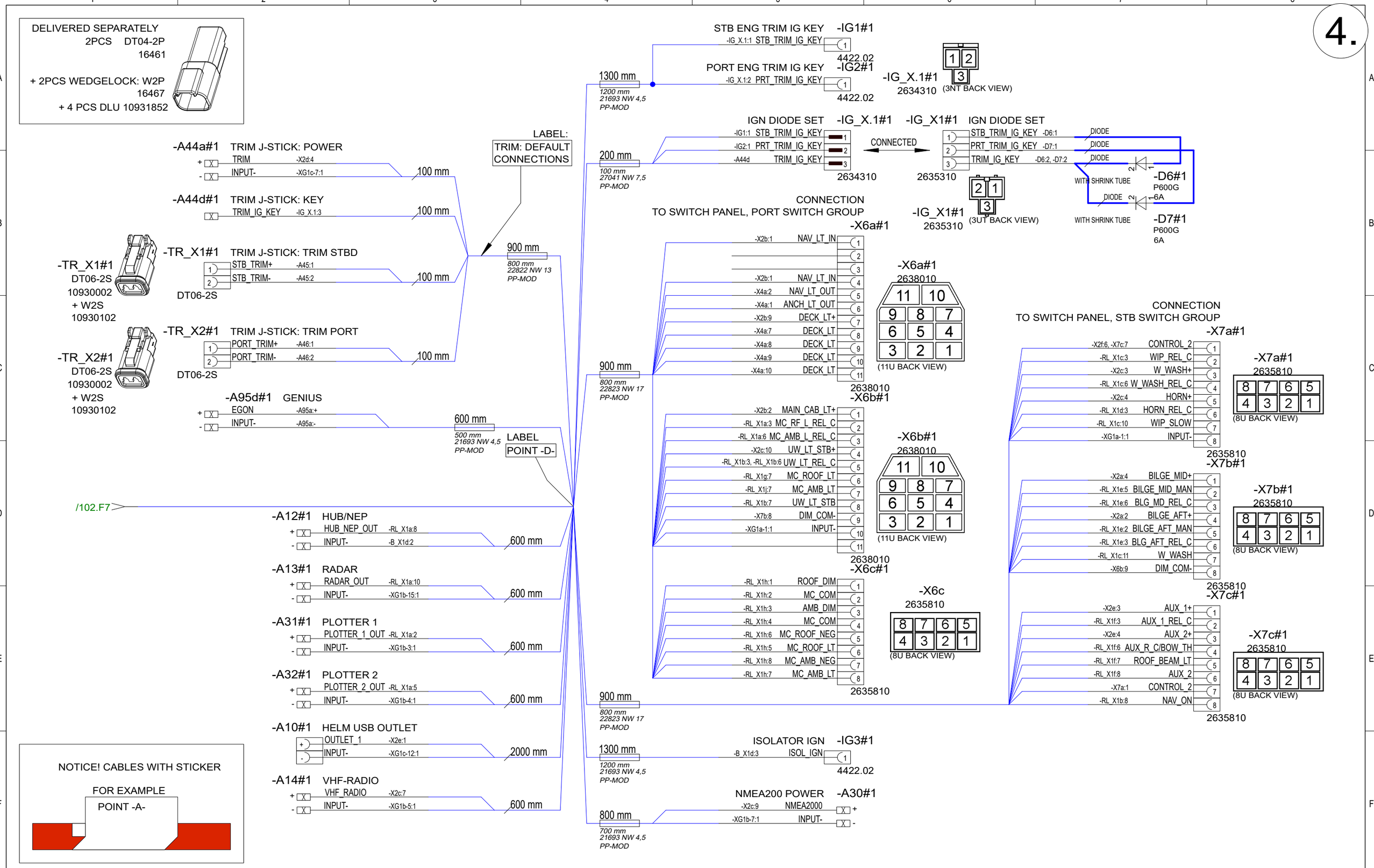

16.10.2023	PF	F11: 2004916; Added X4j & DIM_COM- wire	Date	20.5.2019	NAVIX designed solutions	Axopar		29585	
11.3.2024	PF	G12: 2005054; Added/mod connections to deck h., rel. unit, lt switches, swp	Drawing by	TuM		Boat	Sub-product code	Product code	Project ID
17.2.2023	RK	F10: SEVERAL MODIFICATIONS.	Sheet rev.	12		37 MY20	HULL HARNESS	HL	103 / 210
Date of modification	Modified by	Description	Project rev.	G	Copyright by	Boat model	Title	Loc	Sheet

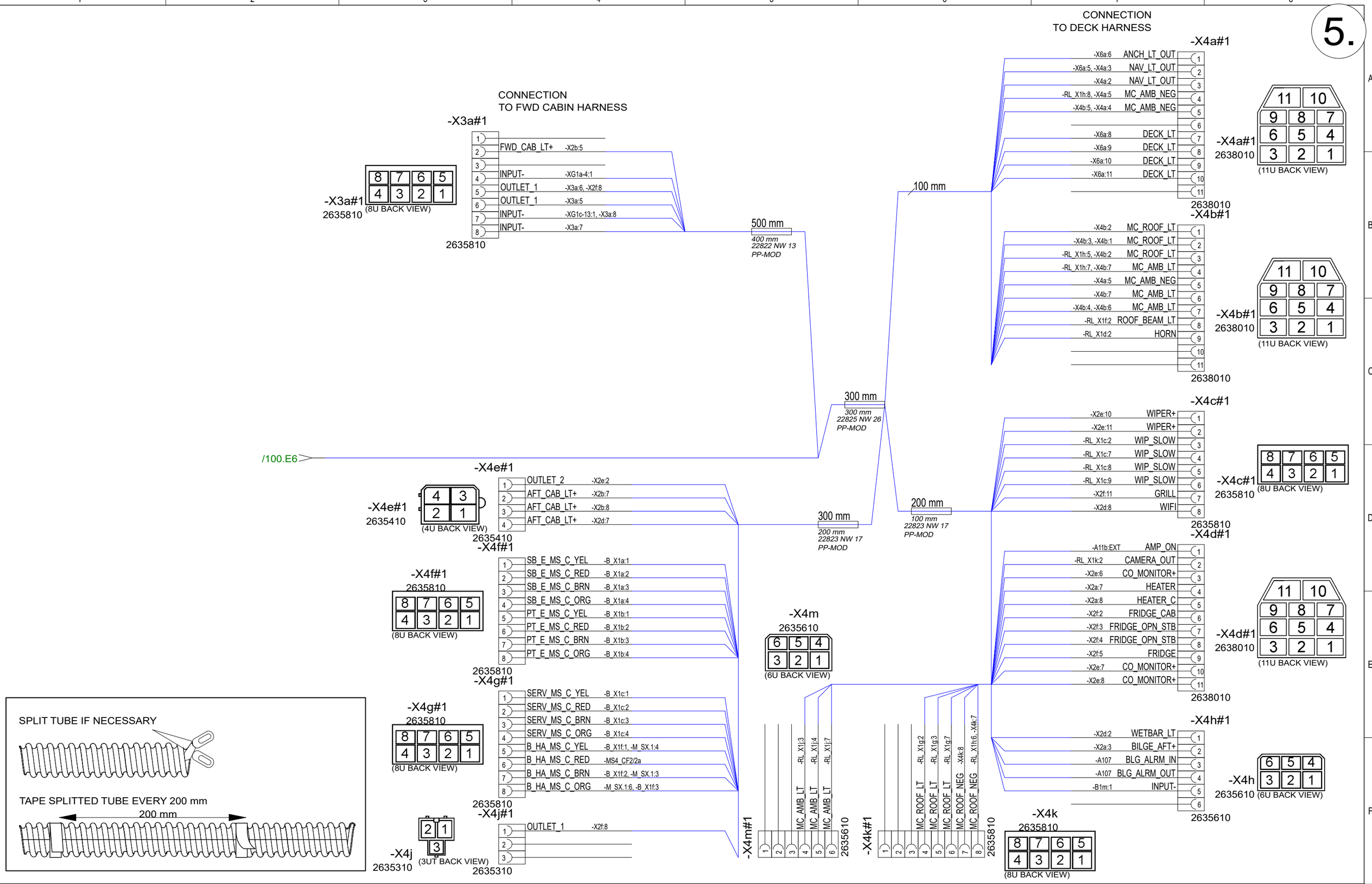

16.10.2023	PF	F11: 2004916; Added X4j & DIM_COM- wire	Date	20.5.2019	Axopar	29585	
11.3.2024	PF	G12: 2005054; Added/mod connections to deck h., rel. unit, lt switches, swp	Drawing by	TuM	Boat / Sub-product code	Product code	Project ID
17.2.2023	RK	F10: SEVERAL MODIFICATIONS.	Sheet rev.	12	37 MY20	HULL HARNESS	HL
Date of modification	Modified by	Description	Project rev.	G	Boat model	Title	Loc

NAVIX designed solutions

Copyright by

Sheet: 104 / 210

HARNESS GENERAL LAYOUT

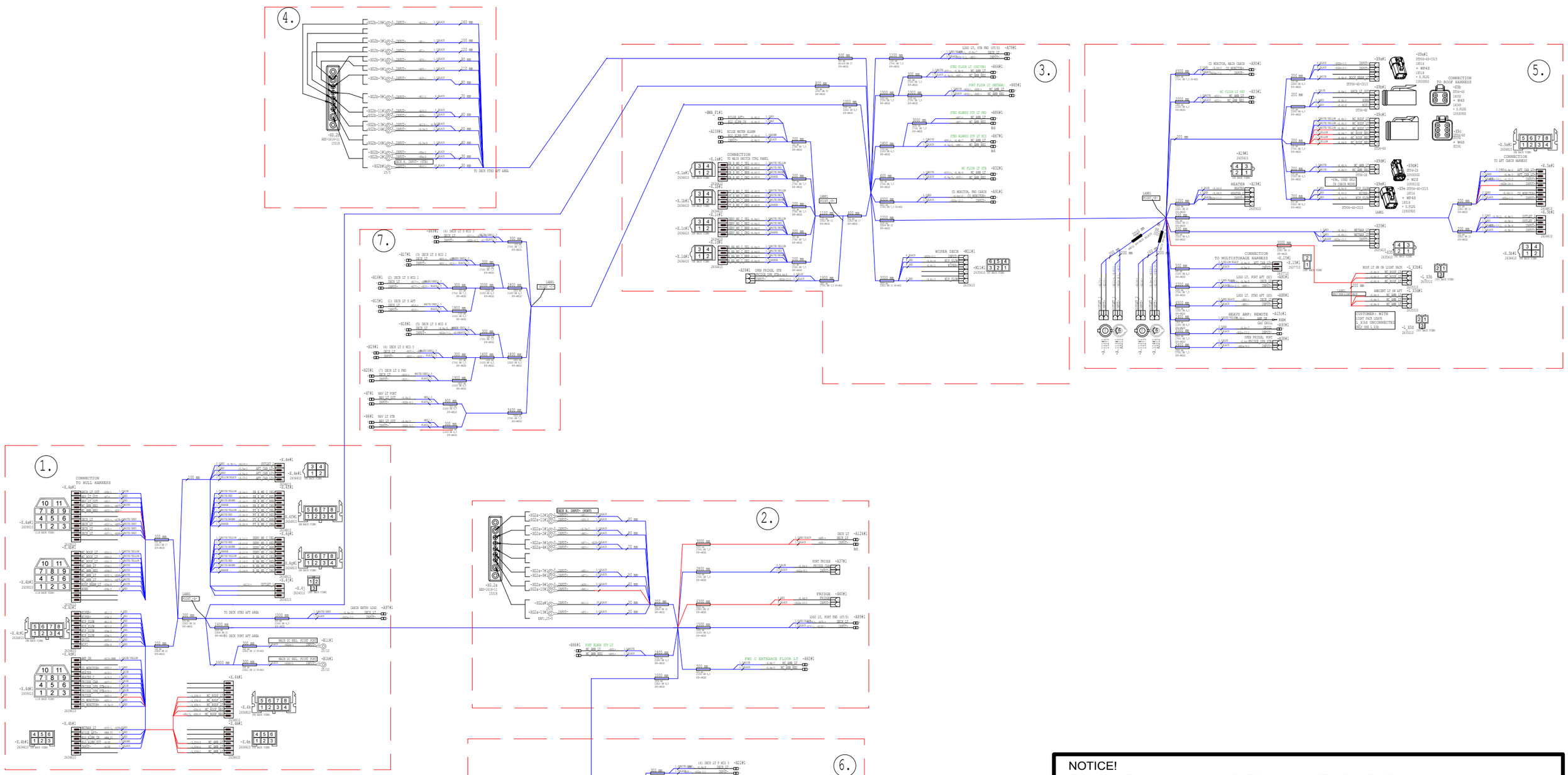

NOTICE!
VERIFY THAT ALL CABLES HAVE MARKINGS
SHOWN IN EXAMPLE BELOW.

EXEMPTION:
ALL <500mm WIRES AND BLACK WIRES
THIS MARKING IS NOT NEEDED.

R2 ISO 6722 100V AWG16 +100 C

MARKING

CABLE

EXAMPLE: RED 1,5mm2 WIRE MARKINGS.

NOTICE!
THIS PAGE SHOWS ONLY GENERAL LAYOUT OF HARNESS.
MORE DETAILED DRAWINGS ARE SEEN IN FOLLOWED PAGES.

NUMBER INSIDE CIRCLE, FOR IN AREA SHOWS PAGE WHERE ACTUAL DRAWING INCLUDES.

FOR EXAMPLE:

1.

16.10.2023	TT	F10; 2004916; Added outlets A111-A114 & X4j	Date	20.5.2019	NAVIX designed solutions	Axopar		29586	
11.3.2024	PF	G11: 2005054; Logo lt supply to deck lt, flir, light pack	Drawing by	TuM		Boat	Sub-product code	Product code	Project ID
30.7.2024	PF	G12: 2005139; A114+1m, LS jumps, camera feed	Sheet rev.	12		37 MY20	DECK HARNESS	HL	105 / 210
Date of modification	Modified by	Description	Project rev.	G	Copyright by	Boat model	Title	Loc	Sheet

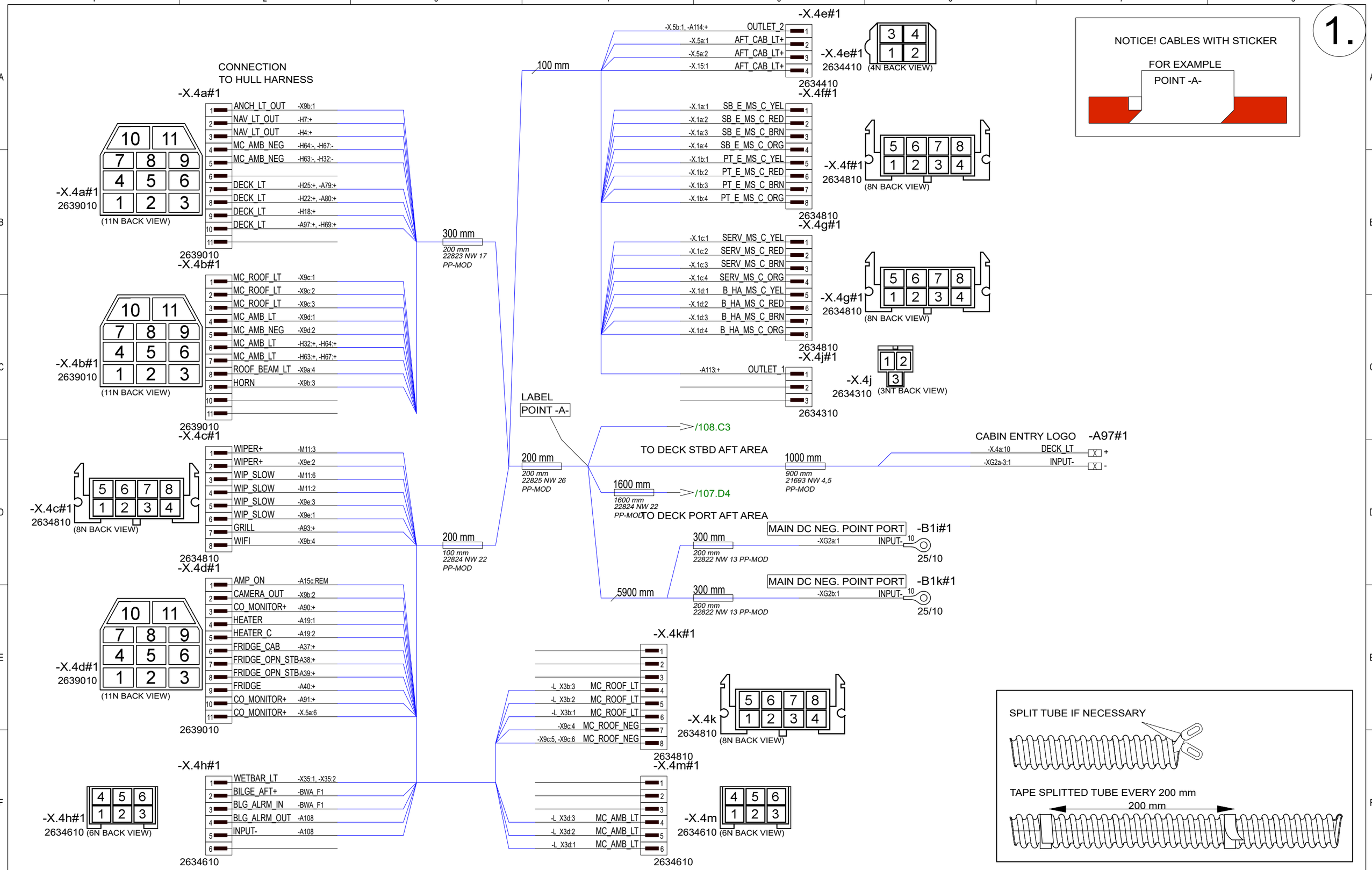

16.10.2023	TT	F10; 2004916; Added outlets A111-A114 & X4j	Date	17.5.2019	NAVIX designed solutions	Axopar		29586
11.3.2024	PF	G11: 2005054; Logo lt supply to deck lt, flir, light pack	Drawing by	TuM		Boat	Sub-product code	Product code / Project ID
30.7.2024	PF	G12: 2005139; A114+1m, LS jumps, camera feed	Sheet rev.	12		37 MY20	DECK HARNESS	HL
Date of modification	Modified by	Description	Project rev.	G	Copyright by	Boat model	Title	Loc / 106 / 210 Sheet

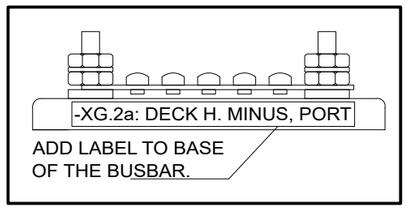

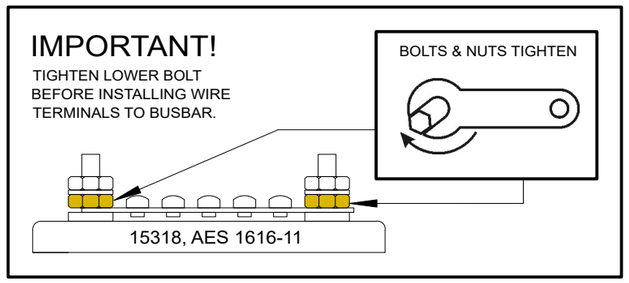

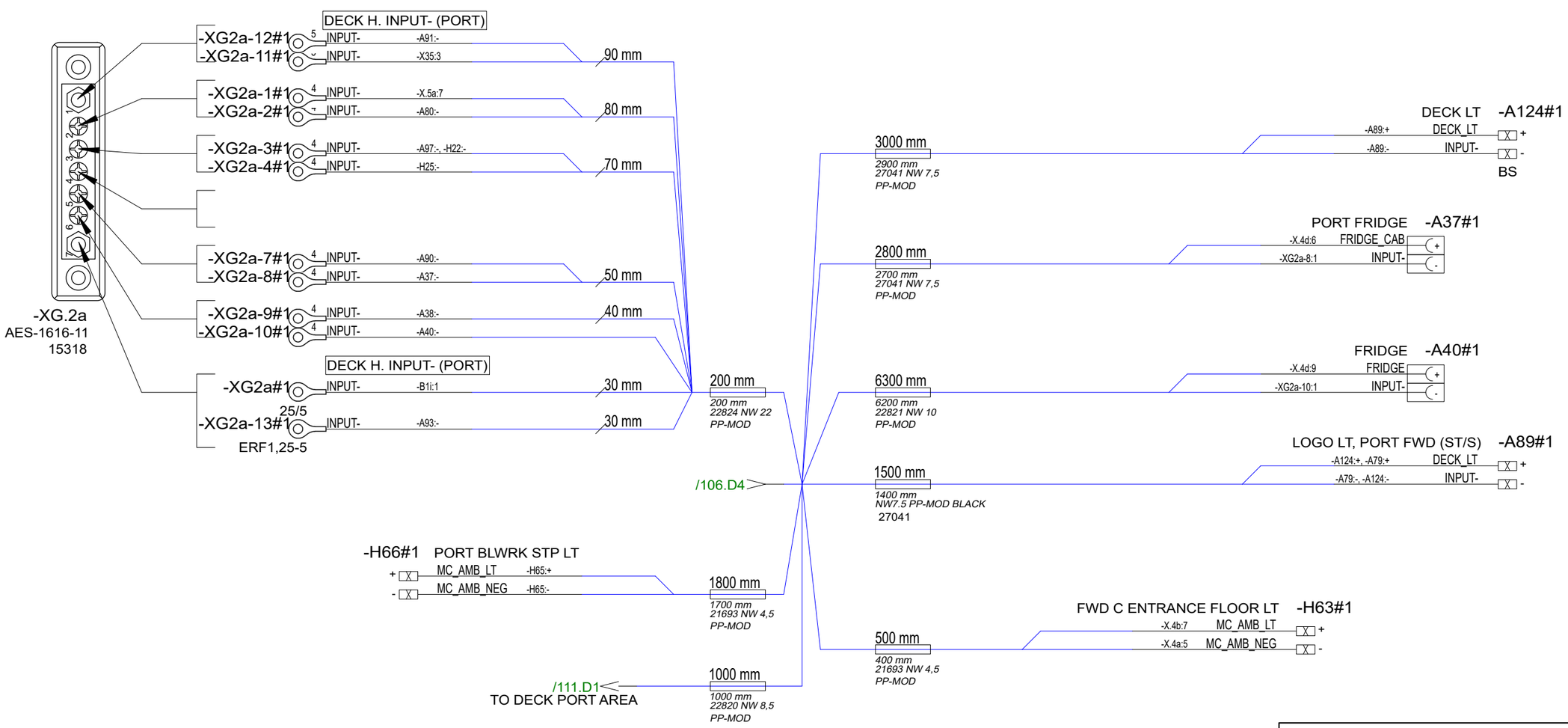

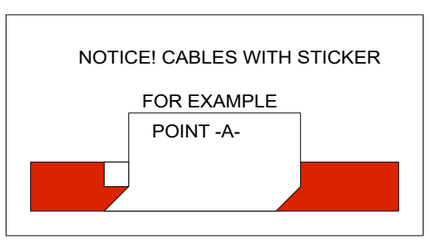

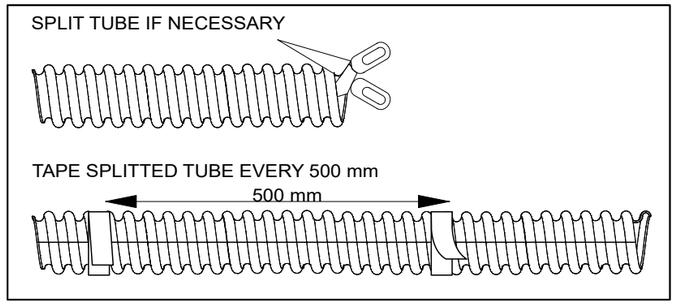

16.10.2023	TT	F10; 2004916; Added outlets A111-A114 & X4j	Date 17.5.2019	NAVIX designed solutions	Axopar			
11.3.2024	PF	G11: 2005054; Logo lt supply to deck lt, flir, light pack	Drawing by TuM		Boat	Sub-product code	29586 Product code	Project ID
30.7.2024	PF	G12: 2005139; A114+1m, LS jumps, camera feed	Sheet rev. 12		37 MY20	DECK HARNESS	HL	107 / 210
Date of modification	Modified by	Description	Project rev. G	Copyright by	Boat model	Title	Loc	Sheet

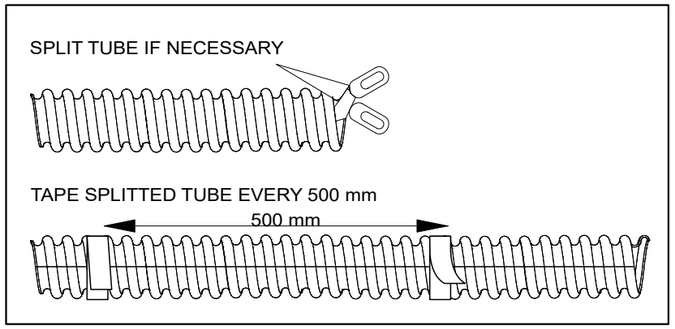

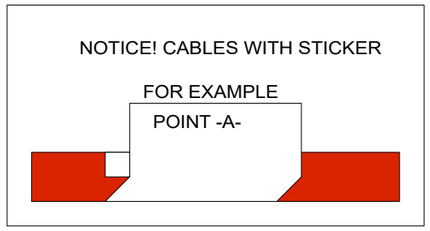

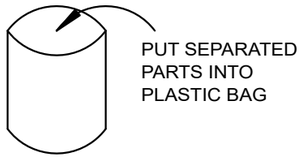

SEPAREATED PARTS

8 PCS 6434.01 LU

TO DECK HARNESS INPUT-

/109.E5 — 500 mm (500 mm, BG-42P NW 37, PP-MOD)

/106.C4 — 800 mm (700 mm, 22467 NW 50, PP-MOD)

-BWA_F1#1
- BILGE_AFT+ -X.4h:2
- BLG_ALRM_IN -X.4h:3

-A108#1 BILGE WATER ALARM
- BLG_ALRM_OUT -X.4h:4
- INPUT- -X.4h:5

200 mm (100 mm, 27041 NW 7,5, PP-MOD)

CONNECTION TO MAIN SWITCH CTRL PANEL

-X.1a#1 (2634410, 4N BACK VIEW)
- SB_E_MS_C_YEL -X.4f:1
- SB_E_MS_C_RED -X.4f:2
- SB_E_MS_C_BRN -X.4f:3
- SB_E_MS_C_ORG -X.4f:4

200 mm (100 mm, 27041 NW 7,5, PP-MOD)

-X.1b#1 (2634410, 4N BACK VIEW)
- PT_E_MS_C_YEL -X.4f:5
- PT_E_MS_C_RED -X.4f:6
- PT_E_MS_C_BRN -X.4f:7
- PT_E_MS_C_ORG -X.4f:8

200 mm (100 mm, 27041 NW 7,5, PP-MOD)

-X.1c#1 (2634410, 4N BACK VIEW)
- SERV_MS_C_YEL -X.4g:1
- SERV_MS_C_RED -X.4g:2
- SERV_MS_C_BRN -X.4g:3
- SERV_MS_C_ORG -X.4g:4

200 mm (100 mm, 27041 NW 7,5, PP-MOD)

-X.1d#1 (2634410, 4N BACK VIEW)
- B_HA_MS_C_YEL -X.4g:5
- B_HA_MS_C_RED -X.4g:6
- B_HA_MS_C_BRN -X.4g:7
- B_HA_MS_C_ORG -X.4g:8

200 mm (100 mm, 27041 NW 7,5, PP-MOD)

-A39#1 OPEN FRIDGE, STB
- FRIDGE_OPN_STB -X.4d:8
- INPUT- -XG2b-12:1

1900 mm (1800 mm, 27041 NW 7,5 PP-MOD)

TO DECK STB AREA /112.C1 — 1000 mm (1000 mm, 22820 NW 8,5, PP-MOD)

LABEL POINT -F-

1100 mm (1100 mm, 22822 NW 13, PP-MOD)

400 mm (400 mm, 22823 NW 17, PP-MOD)

1200 mm (1100 mm, 27041 NW 7,5, PP-MOD)

LOGO LT, STB FWD (ST/S) -A79#1
- -A89:+, -X.4a:7 DECK_LT +
- -XG2b-5:1, -A89:- INPUT- -

300 mm (200 mm, 27041 NW 7,5, PP-MOD)

STBD FLOOR LT (DRIVER) -H64#1
- -H65:+, -X.4b:6 MC_AMB_LT +
- -X.4a:4, -H65:- MC_AMB_NEG -

1500 mm (1500 mm, 27041 NW 7,5, PP-MOD)

2300 mm (2200 mm, 27041 NW 7,5, PP-MOD)

PORT FLOOR LT (WETBAR) -H65#1
- -H64:+, -H66:+ MC_AMB_LT +
- -H64:-, -H66:- MC_AMB_NEG -

3000 mm (2200 mm, 27041 NW 7,5, PP-MOD)

STBD BLWRKS STP LT FWD -H86#1
- -H67:+ MC_AMB_LT +
- -H67:- MC_AMB_NEG -

BS

1800 mm (1700 mm, 21693 NW 4,5, PP-MOD)

STBD BLWRKS STP LT MID -H67#1
- -H86:+, -X.4b:7 MC_AMB_LT +
- -X.4a:4, -H86:- MC_AMB_NEG -

BS

400 mm (300 mm, 27041 NW 7,5, PP-MOD)

MC FLOOR LT STB -H32#1
- -H33:+, -X.4b:6 MC_AMB_LT +
- -X.4a:5, -H33:- MC_AMB_NEG -

4500 mm (4400 mm, 27041 NW 7,5 PP-MOD)

CO MONITOR, FWD CABIN -A91#1
- -X.4d:10 CO_MONITOR+ +
- -XG2a-12:1 INPUT- -

2200 mm (2100 mm, 22824 NW 22, PP-MOD)

/110.D2

TO -X.5 and -X9 CONNECTORS

3000 mm (2900 mm, 22821 NW 10 PP-MOD)

WIPER DECK -M11#1
- -XG2b-9:1 INPUT- 1
- -X.4c:4 WIP_SLOW 2
- -X.4c:1 WIPER+ 3
- 4
- 5
- -X.4c:3 WIP_SLOW 6

2635610

-M11#1 2635610 (6U BACK VIEW)

16.10.2023	TT	F10; 2004916; Added outlets A111-A114 & X4j	Date	17.5.2019	NAVIX designed solutions	Axopar	29586
11.3.2024	PF	G11: 2005054; Logo lt supply to deck lt, flir, light pack	Drawing by	TuM		Boat / Sub-product code	Product code / Project ID
30.7.2024	PF	G12: 2005139; A114+1m, LS jumps, camera feed	Sheet rev.	12		37 MY20	DECK HARNESS
Date of modification	Modified by	Description	Project rev.	G	Copyright by	Boat model	Title / HL / Loc / 108 / 210 Sheet

4.

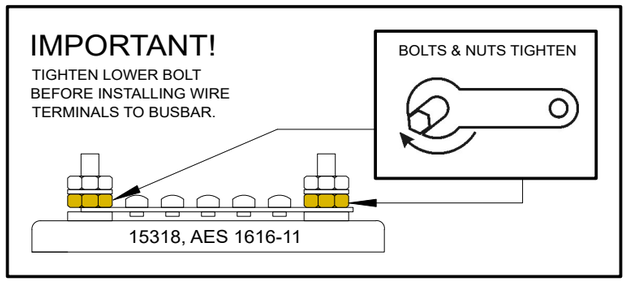

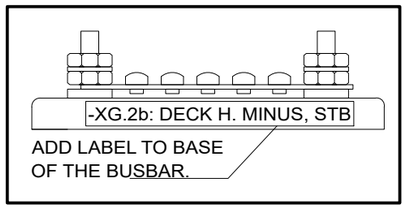

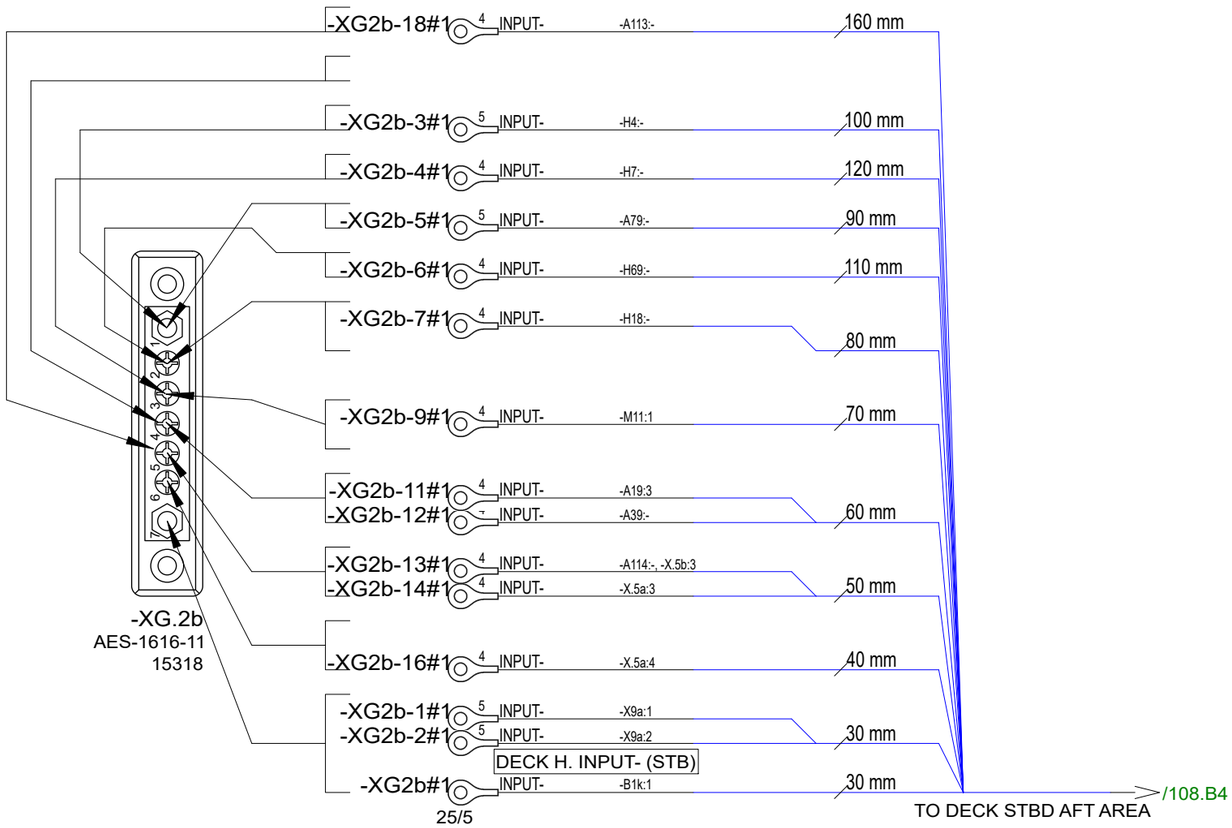

16.10.2023	TT	F10; 2004916; Added outlets A111-A114 & X4j	Date 17.5.2019	NAVIX designed solutions	Axopar		29586	
11.3.2024	PF	G11: 2005054; Logo lt supply to deck lt, flir, light pack	Drawing by TuM		Boat	Sub-product code	Product code	Project ID
30.7.2024	PF	G12: 2005139; A114+1m, LS jumps, camera feed	Sheet rev. 12		37 MY20	DECK HARNESS	HL	109 / 210
Date of modification	Modified by	Description	Project rev. G	Copyright by	Boat model	Title	Loc	Sheet

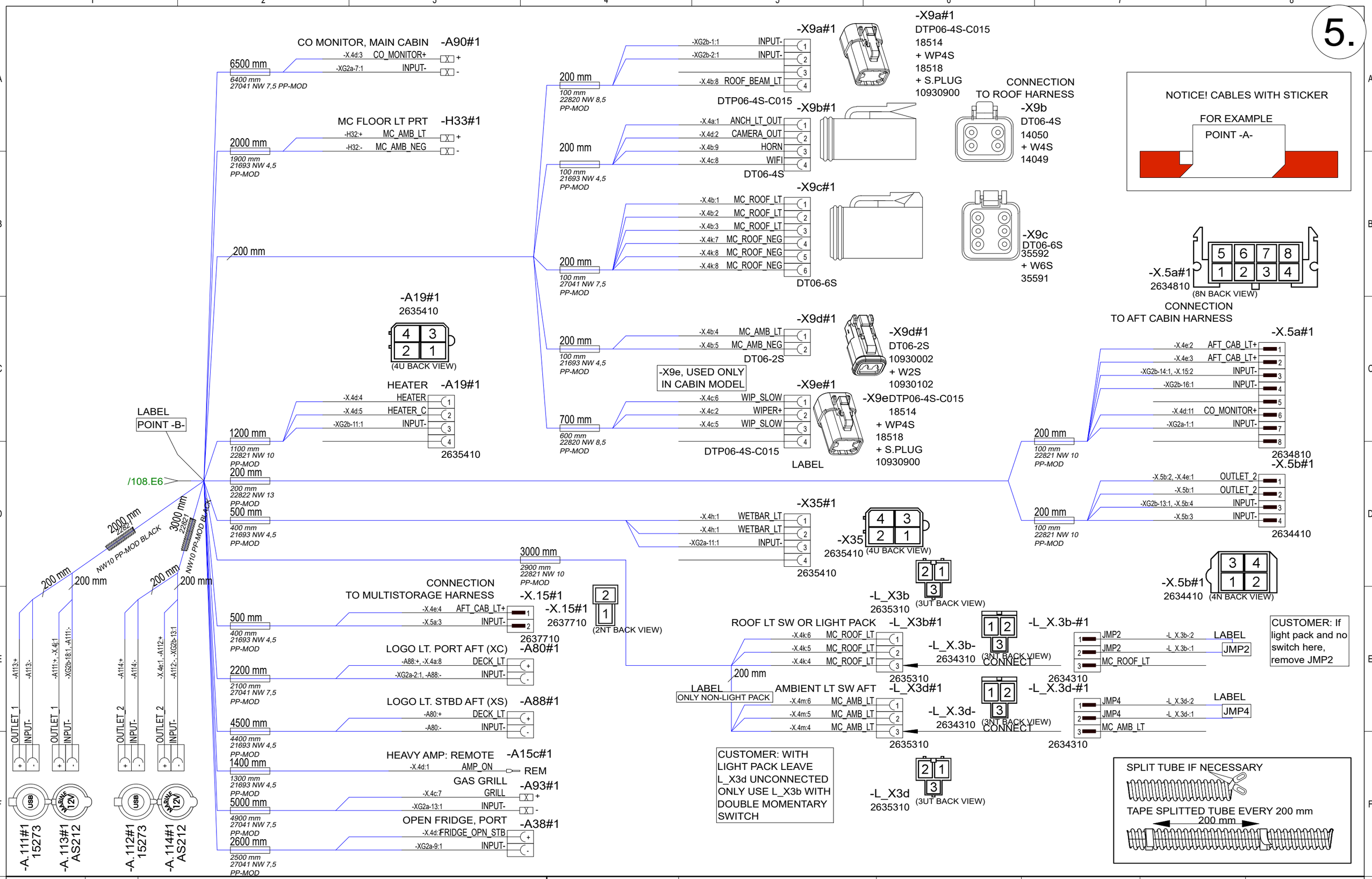

16.10.2023	TT	F10; 2004916; Added outlets A111-A114 & X4j	Date	17.5.2019	NAVIX designed solutions	Axopar		29586
11.3.2024	PF	G11: 2005054; Logo lt supply to deck lt, flir, light pack	Drawing by	TuM		Boat	Sub-product code	Product code / Project ID
30.7.2024	PF	G12: 2005139; A114+1m, LS jumps, camera feed	Sheet rev.	12		37 MY20	DECK HARNESS	HL
Date of modification	Modified by	Description	Project rev.	G	Copyright by	Boat model	Title	Loc / 110 / 210 Sheet

6.

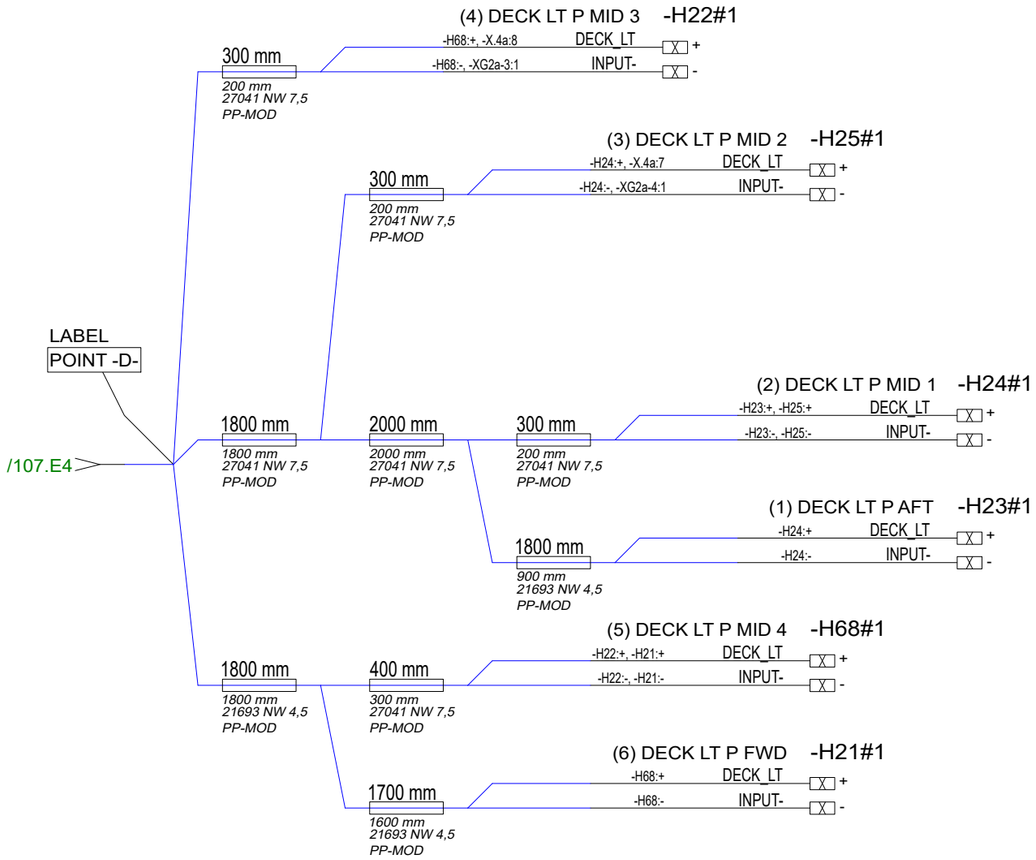

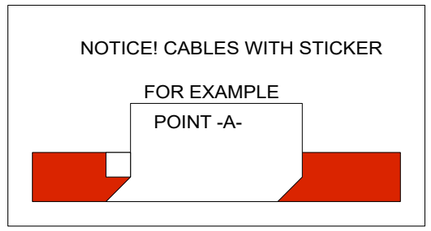

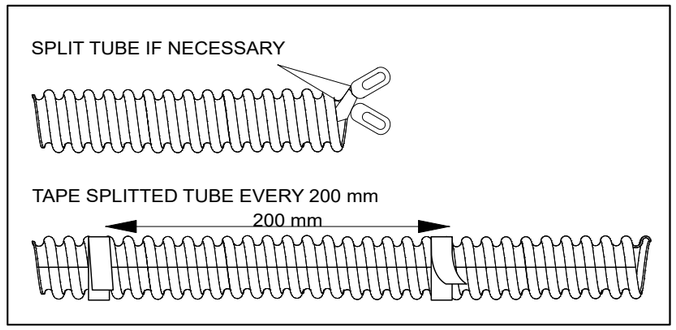

Date of modification	Modified by	Description
16.10.2023	TT	F10; 2004916; Added outlets A111-A114 & X4j
11.3.2024	PF	G11: 2005054; Logo lt supply to deck lt, flir, light pack
30.7.2024	PF	G12: 2005139; A114+1m, LS jumps, camera feed

Date	31.3.2020
Drawing by	TuM
Sheet rev.	12
Project rev.	G

NAVIX designed solutions

Axopar		29586	
Boat	Sub-product code	Product code	Project ID
37 MY20	DECK HARNESS	HL	111/ 210
Boat model	Title	Loc	Sheet

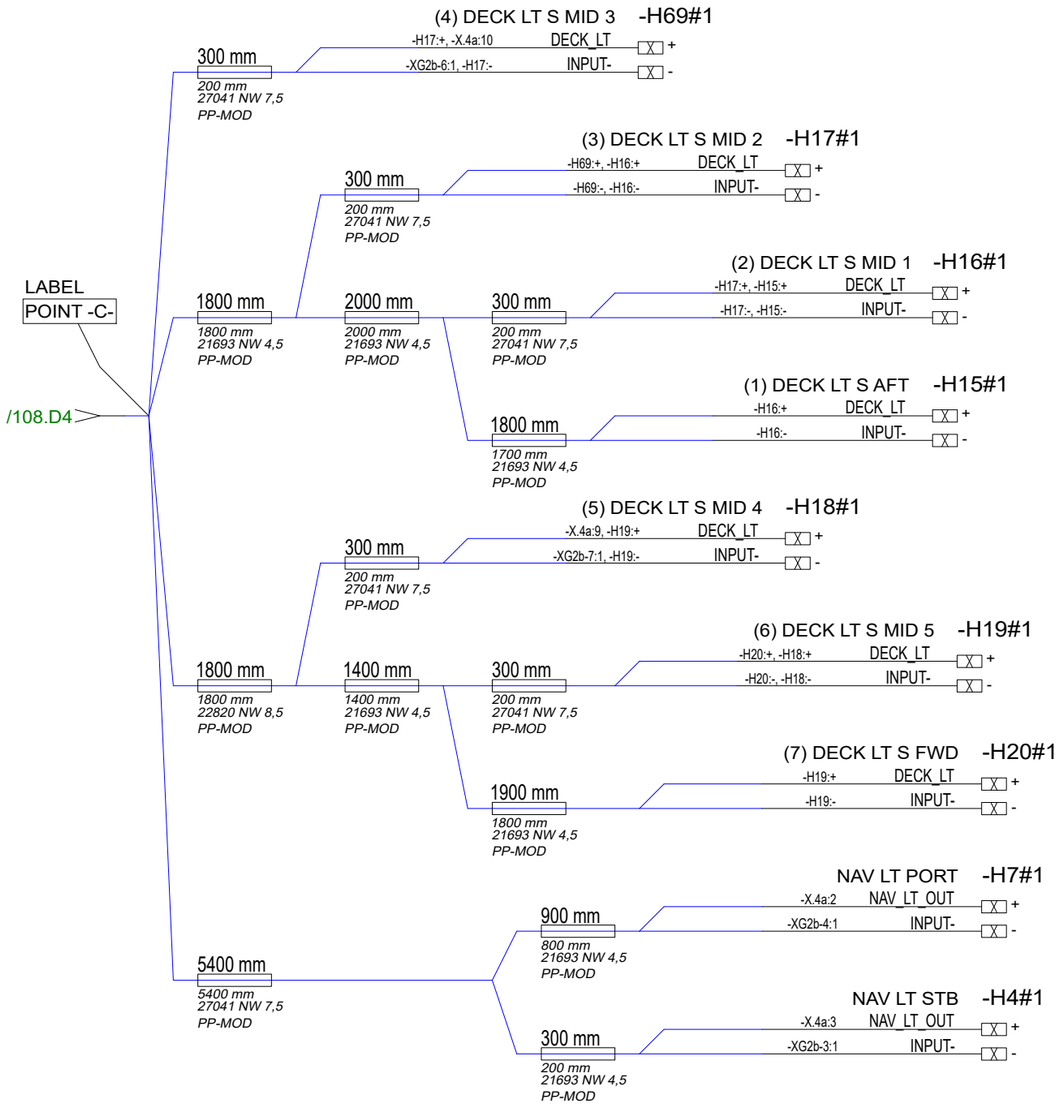

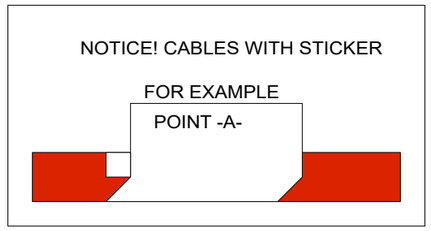

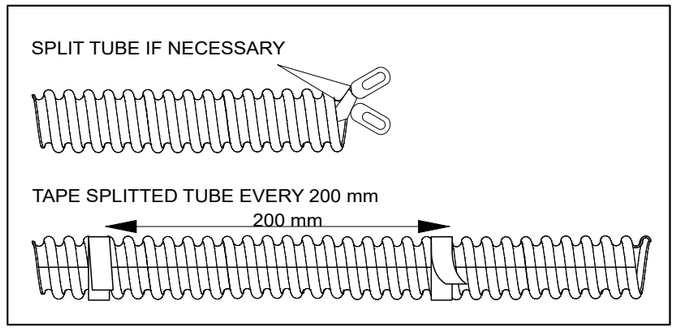

16.10.2023	TT	F10; 2004916; Added outlets A111-A114 & X4j	Date	2.4.2020	NAVIX designed solutions	Axopar		29586
11.3.2024	PF	G11: 2005054; Logo lt supply to deck lt, flir, light pack	Drawing by	TuM		Boat	Sub-product code	Product code / Project ID
30.7.2024	PF	G12: 2005139; A114+1m, LS jumps, camera feed	Sheet rev.	12		37 MY20	DECK HARNESS	HL
Date of modification	Modified by	Description	Project rev.	G	Copyright by	Boat model	Title	Loc / 112 / 210 Sheet

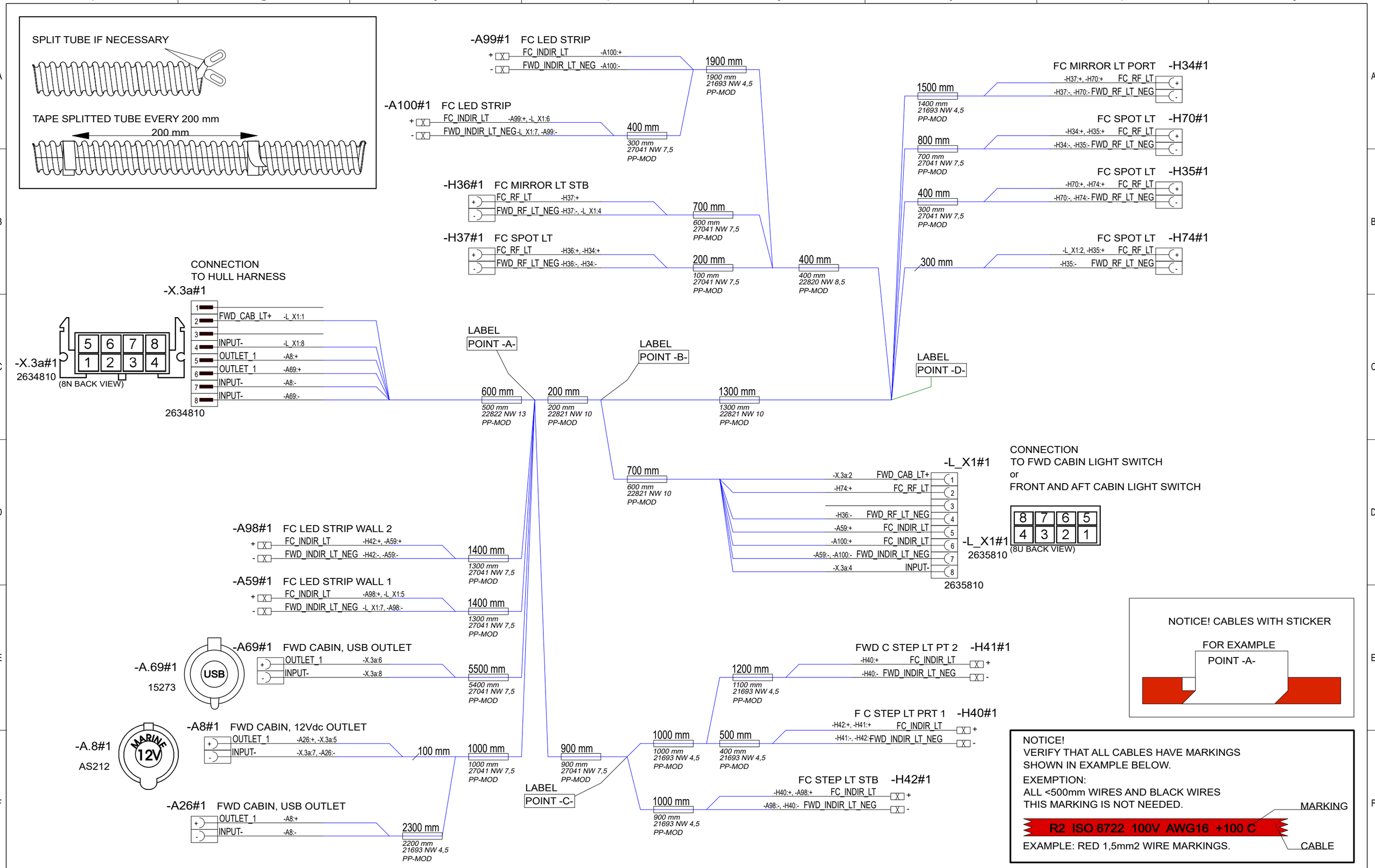

Date of modification	Modified by	Description
22.9.2021	VV	E6: NOT MODIFIED / REVISION RETURNED TO REV. E.
17.2.2023	RK	F6: NOT MODIFIED
4.4.2024	PF	G7: 2005054; Light pack changes

Date	16.5.2019
Drawing by	TuM
Sheet rev.	7
Project rev.	G

NAVIX designed solutions
Copyright by

Axopar			
Boat	Sub-product code	29587 Product code	Project ID
37 MY20	FORE CABIN HARNESS	HL	113 / 210
Boat model	Title	Loc	Sheet

NOTICE!
VERIFY THAT ALL CABLES HAVE MARKINGS
SHOWN IN EXAMPLE BELOW.

EXEMPTION:
ALL <500mm WIRES AND BLACK WIRES
THIS MARKING IS NOT NEEDED.

R2 ISO 6722 100V AWG16 +100 C

MARKING

CABLE

EXAMPLE: RED 1,5mm2 WIRE MARKINGS.

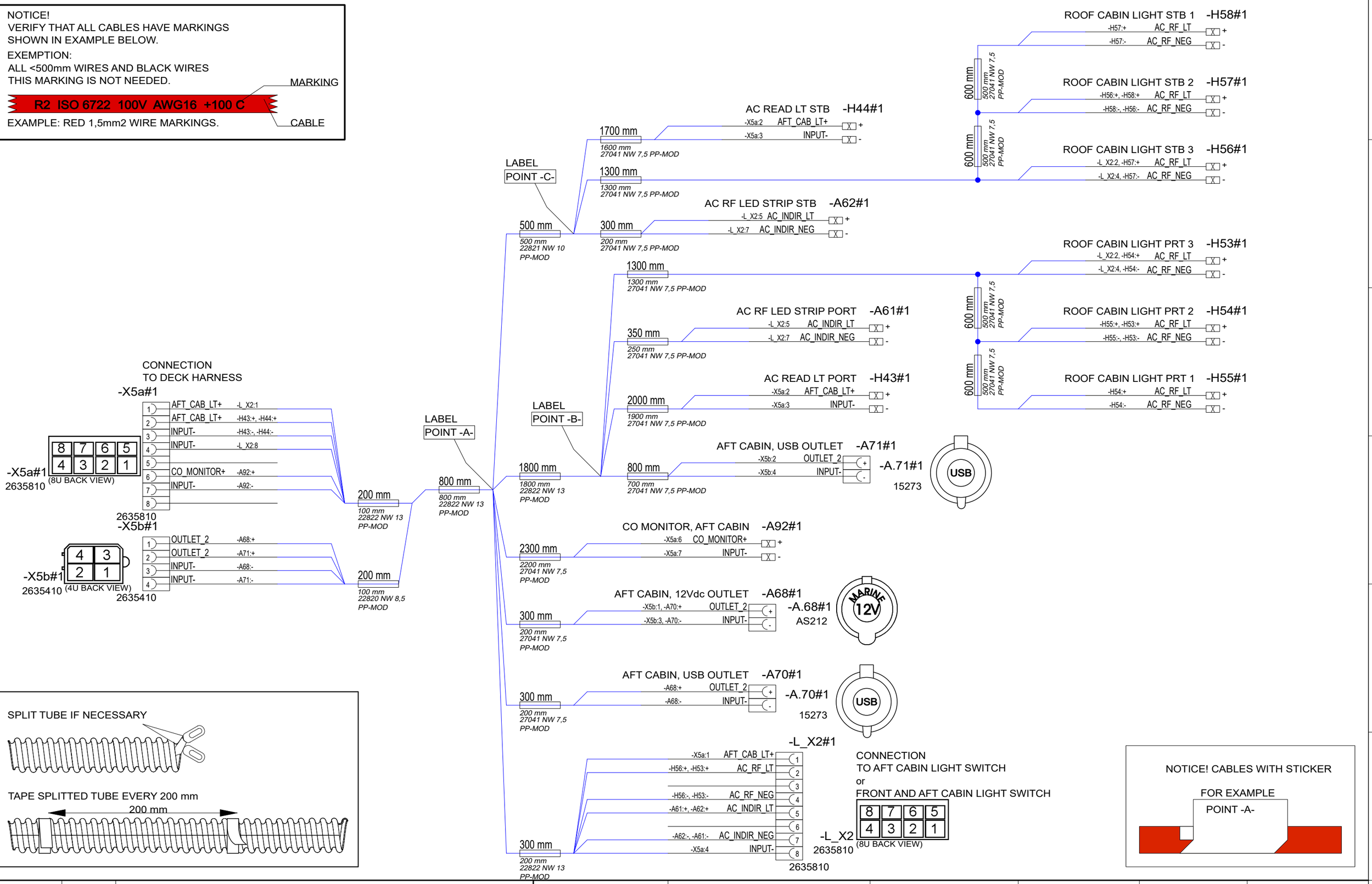

22.9.2021	VV	E5: NOT MODIFIED / REVISION RETURNED TO REV. E.	Date	16.5.2019	NAVIX designed solutions	Axopar		29588	
17.2.2023	RK	F5: NOT MODIFIED.	Drawing by	TuM		Boat	Sub-product code	Product code	Project ID
4.4.2024	PF	G6: 2005054; Light pack changes	Sheet rev.	6		37 MY20	AFT CABIN HARNESS	HL	114 / 210
Date of modification	Modified by	Description	Project rev.	G	Copyright by	Boat model	Title	Loc	Sheet

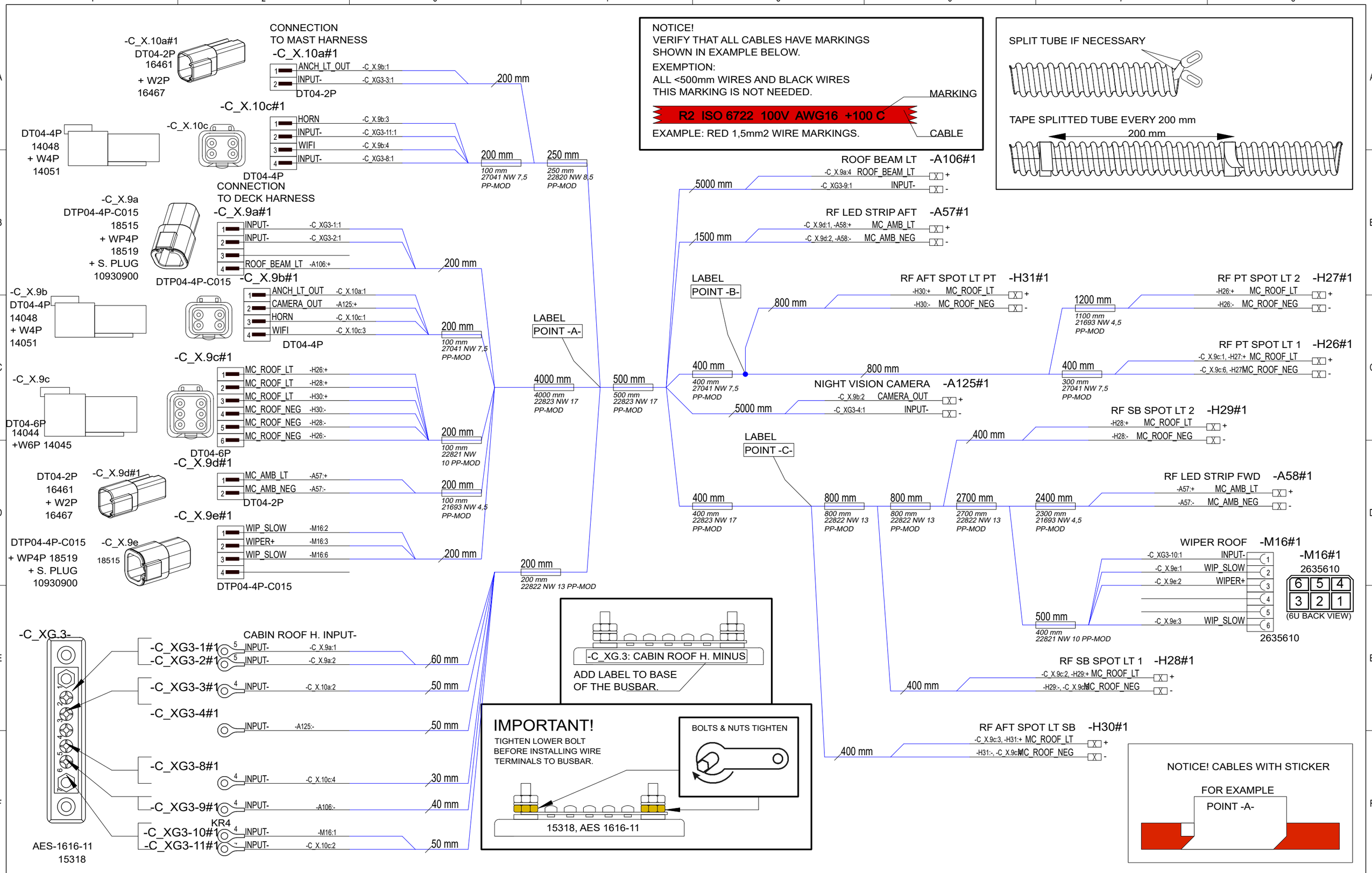

Date of modification	Modified by	Description
11.3.2024	PF	G8: 2005054; Light return paths, wifi minus, A106 description, C_X.9
30.7.2024	PF	G9: 2005139; Roof beam lt extended by 2000mm
17.2.2023	RK	F7: NOT MODIFIED.

Date	17.5.2019
Drawing by	TuM
Sheet rev.	9
Project rev.	G

NAVIX designed solutions
Copyright by

Axopar			
Boat	Sub-product code	29589 Product code	Project ID
37 MY20	CABIN ROOF HARNESS	HL	
Boat model	Title	Loc	115 / 210 Sheet

NOTICE!
VERIFY THAT ALL CABLES HAVE MARKINGS
SHOWN IN EXAMPLE BELOW.

EXEMPTION:
ALL <500mm WIRES AND BLACK WIRES
THIS MARKING IS NOT NEEDED.

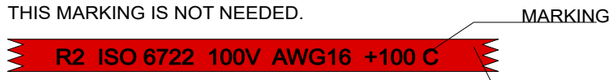

EXAMPLE: RED 1,5mm2 WIRE MARKINGS.

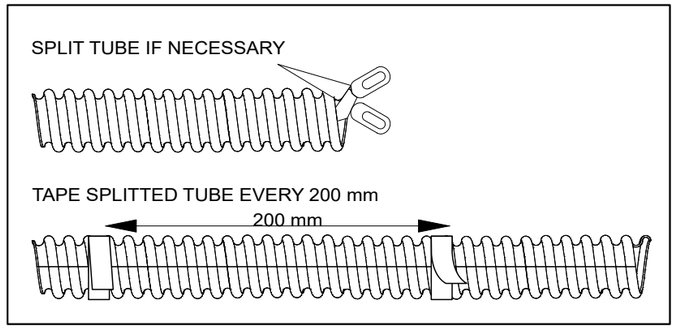

CROSS CABIN WIPER ADAPTER

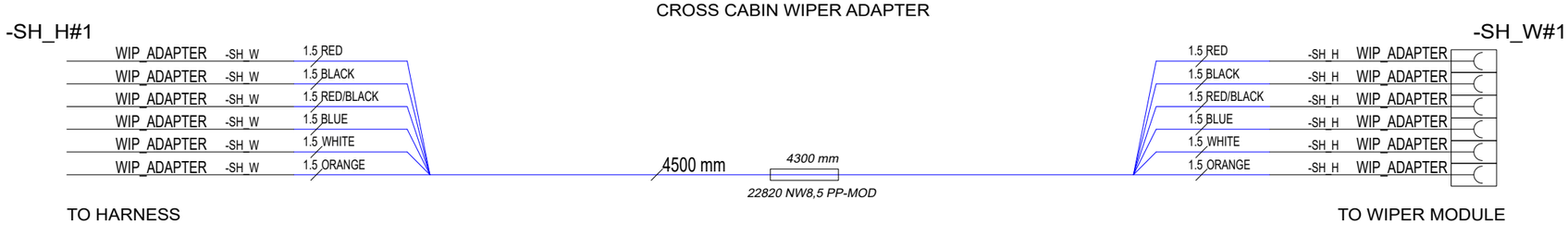

11.3.2024	PF	G8: 2005054; Light return paths, wifi minus, A106 description	Date	17.5.2019	NAVIX designed solutions	Axopar		29589	
30.7.2024	PF	G9: 2005139; Roof beam lt extended by 2000mm	Drawing by	TuM		Boat	Sub-product code	Product code	Project ID
17.2.2023	RK	F7: NOT MODIFIED.	Sheet rev.	9		37 MY20	CABIN ROOF HARNESS	HL	116 / 210
Date of modification	Modified by	Description	Project rev.	G	Copyright by	Boat model	Title	Loc	Sheet

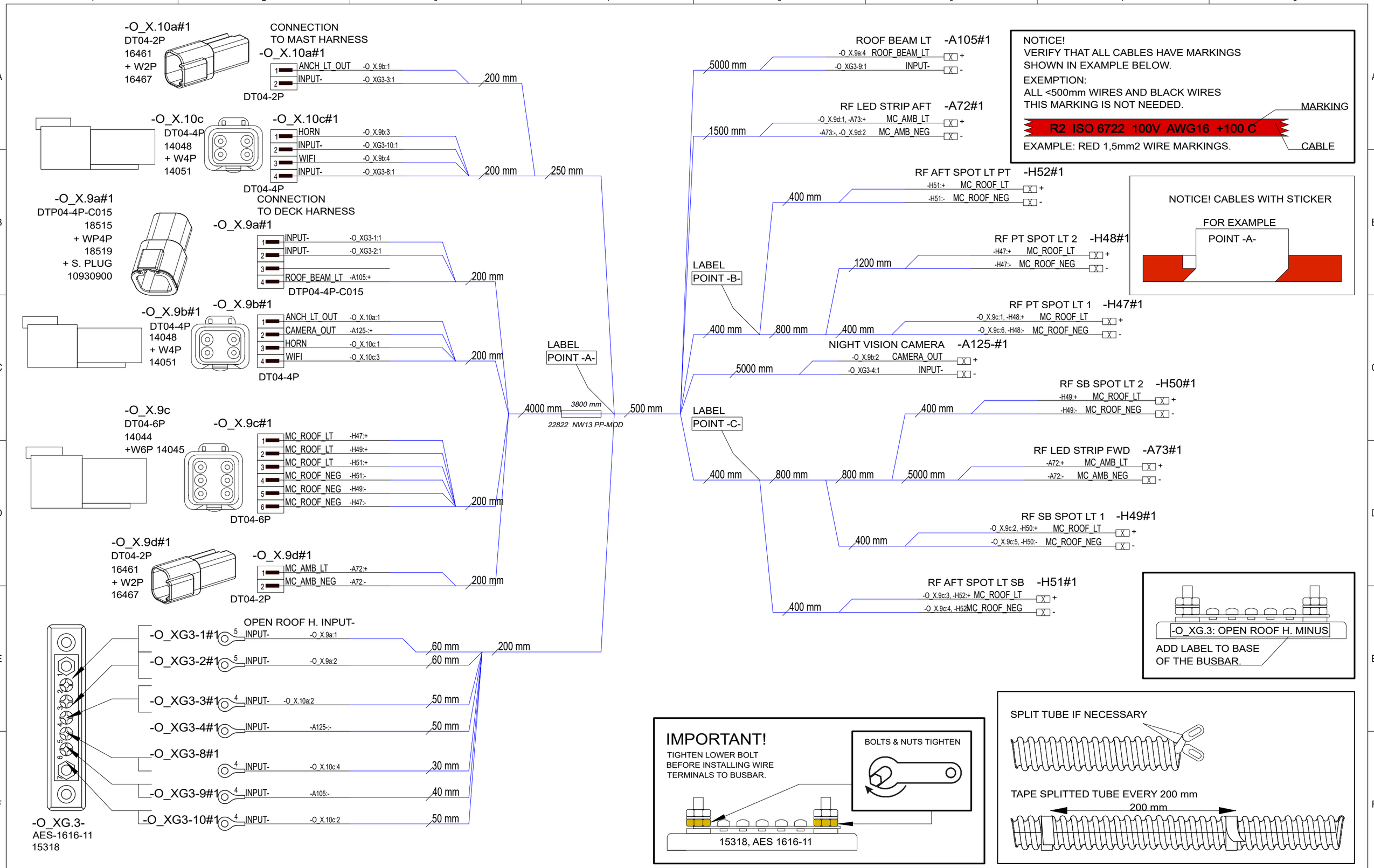

11.3.2024	PF	G8: 2005054; Light return paths, wifi minus, A105 description	Date	17.5.2019	NAVIX designed solutions	Axopar		
30.7.2024	PF	G9: 2005139; Roof beam lt extended by 2000mm	Drawing by	TuM		Boat	Sub-product code	29590 Product code	Project ID
17.2.2023	RK	F7: NOT MODIFIED.	Sheet rev.	9		37 MY20	OPEN ROOF HARNESS	HL	117 / 210
Date of modification	Modified by	Description	Project rev.	G	Copyright by	Boat model	Title	Loc	Sheet

NOTICE!
VERIFY THAT ALL CABLES HAVE MARKINGS
SHOWN IN EXAMPLE BELOW.

EXEMPTION:
ALL <500mm WIRES AND BLACK WIRES
THIS MARKING IS NOT NEEDED.

MARKING

R2 ISO 6722 100V AWG16 +100 C

CABLE

EXAMPLE: RED 1,5mm2 WIRE MARKINGS.

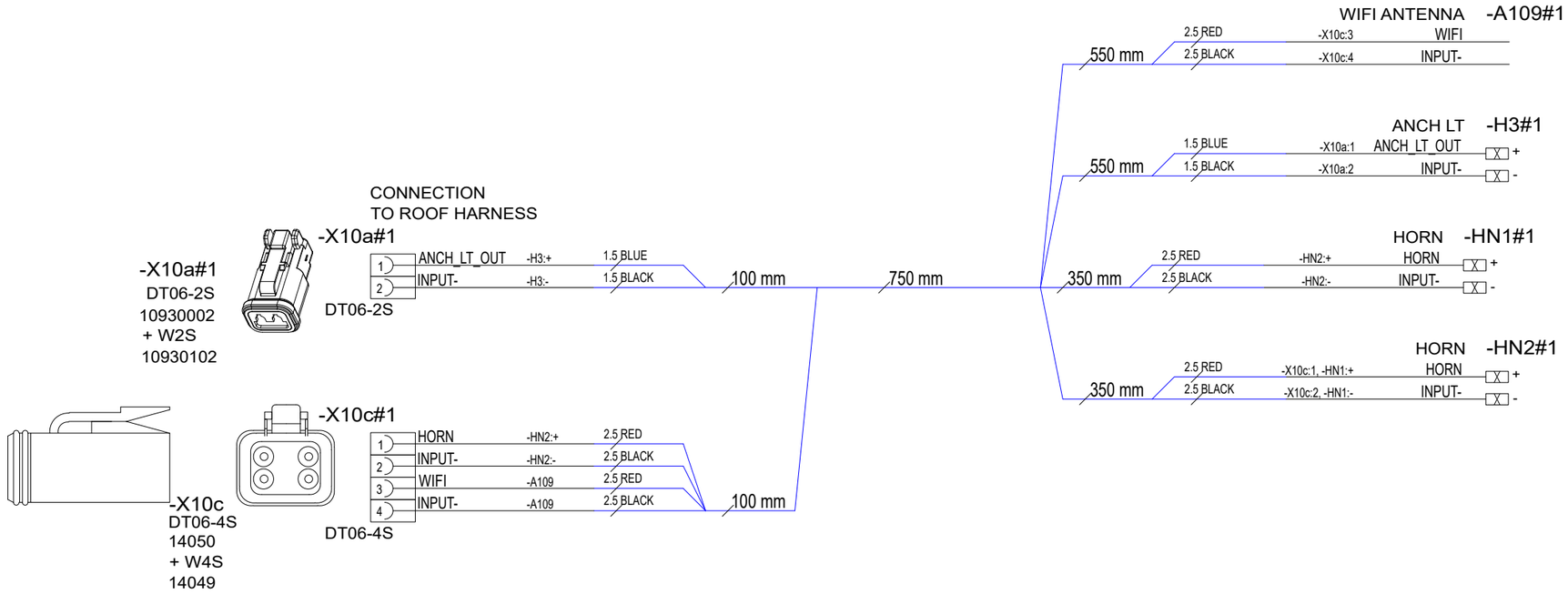

22.9.2021	VV	E5: NOT MODIFIED / REVISION RETURNED TO REV. E.	Date 16.5.2019	NAVIX designed solutions	Axopar		29591	
17.2.2023	RK	F5: NOT MODIFIED.	Drawing by TuM		Boat	Sub-product code	Product code	Project ID
15.06.2021	TT	G6: 2005054; Wifi minus 1,5mm2->2,5mm2	Sheet rev. 6		37 MY20	MAST HARNESS	HL	118 / 210
Date of modification	Modified by	Description	Project rev. G	Copyright by	Boat model	Title	Loc	Sheet

NOTICE!
VERIFY THAT ALL CABLES HAVE MARKINGS
SHOWN IN EXAMPLE BELOW.

EXEMPTION:
ALL <500mm WIRES AND BLACK WIRES
THIS MARKING IS NOT NEEDED.

EXAMPLE: RED 1,5mm2 WIRE MARKINGS.

NOTICE! CABLES WITH STICKER

FOR EXAMPLE

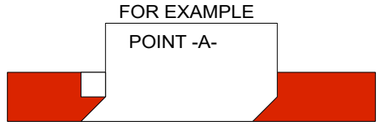

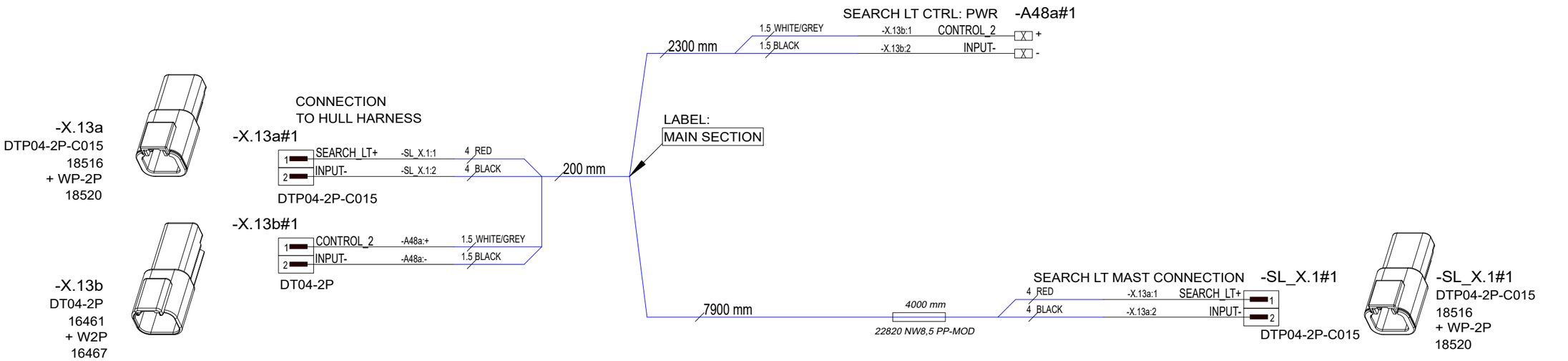

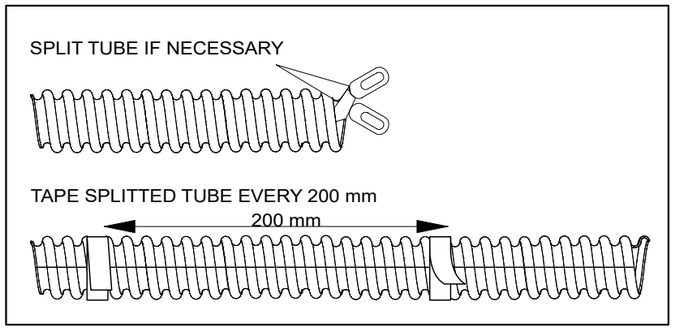

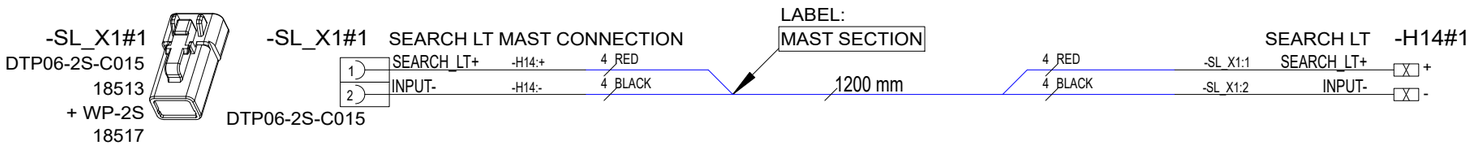

15.4.2024	PF	G5: 2005054; Not modified	Date	21.5.2019	NAVIX designed solutions	Axopar		29592	
22.9.2021	VV	E5: NOT MODIFIED / REVISION RETURNED TO REV. E.	Drawing by	TuM		Boat	Sub-product code	Product code	Project ID
17.2.2023	RK	F5: NOT MODIFIED.	Sheet rev.	5		37 MY20	SEARCH LT HARNESS	HL	119 / 210
Date of modification	Modified by	Description	Project rev.	G	Copyright by	Boat model	Title	Loc	Sheet

NOTICE!
VERIFY THAT ALL CABLES HAVE MARKINGS
SHOWN IN EXAMPLE BELOW.

EXEMPTION:
ALL <500mm WIRES AND BLACK WIRES
THIS MARKING IS NOT NEEDED.

MARKING

R2 ISO 6722 100V AWG16 +100 C

CABLE

EXAMPLE: RED 1,5mm2 WIRE MARKINGS.

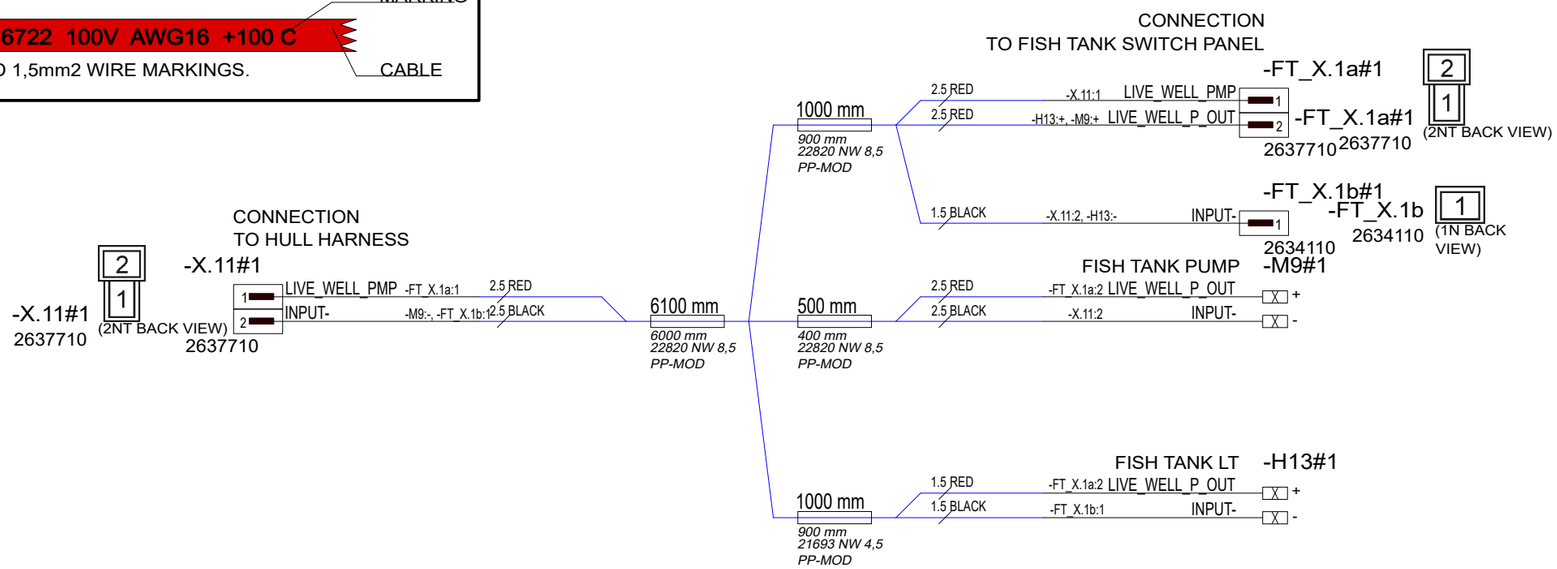

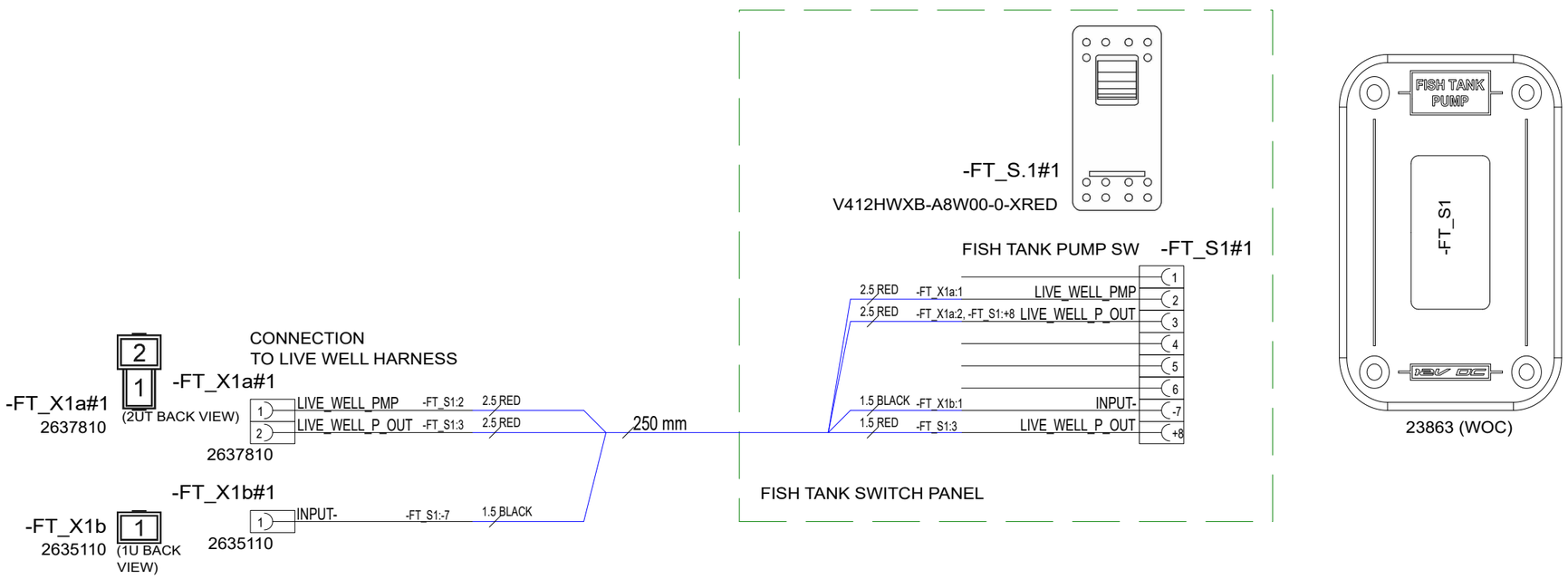

15.4.2024	PF	G4: 2005054; Not modified	Date	21.5.2019	NAVIX designed solutions	Axopar	23863	29593
17.2.2023	RK	F3: NOT MODIFIED.	Drawing by	TuM		Boat	Sub-product code	Product code
28.11.2023	PF	F4: 2004954/2004916; Switch changed to locking type, wiring modified	Sheet rev.	4		37 MY20	LIVE WELL HARNESS	HL
Date of modification	Modified by	Description	Project rev.	G	Copyright by	Boat model	Title	Loc

Project ID

120 / 210
Sheet

NOTICE!
VERIFY THAT ALL CABLES HAVE MARKINGS
SHOWN IN EXAMPLE BELOW.

EXEMPTION:
ALL <500mm WIRES AND BLACK WIRES
THIS MARKING IS NOT NEEDED.

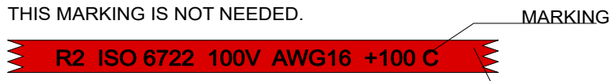

EXAMPLE: RED 1,5mm2 WIRE MARKINGS.

SPLIT TUBE IF NECESSARY

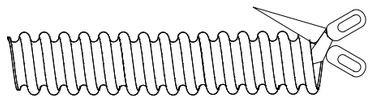

TAPE SPLITTED TUBE EVERY 200 mm

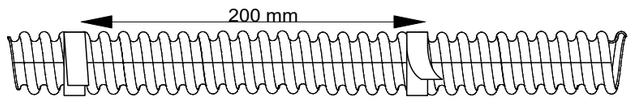

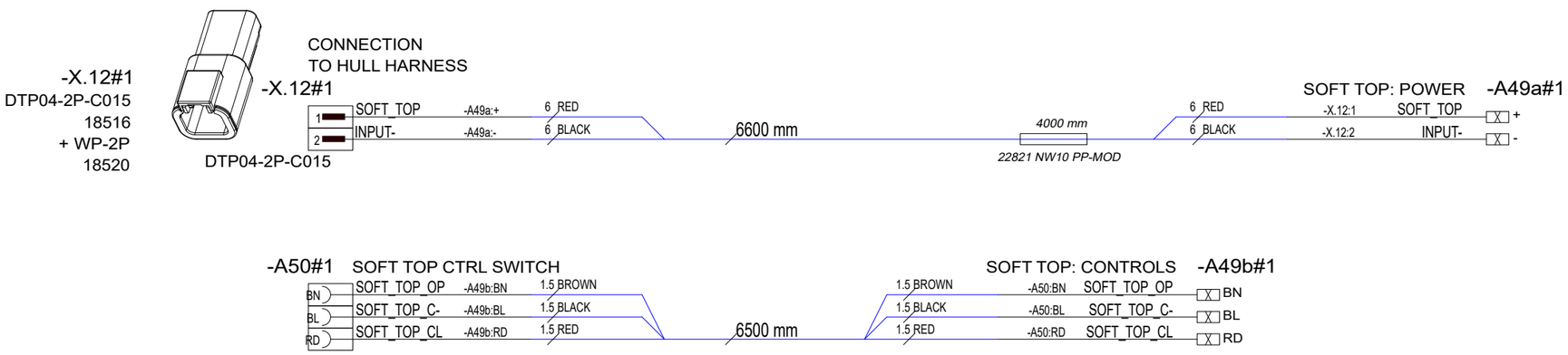

15.4.2024	PF	G5: 2005054; Not modified	Date	21.5.2019	NAVIX designed solutions	Axopar		29594	
22.9.2021	VV	E5: NOT MODIFIED / REVISION RETURNED TO REV. E.	Drawing by	TuM		Boat	Sub-product code	Product code	Project ID
17.2.2023	RK	F5: NOT MODIFIED.	Sheet rev.	5		37 MY20	ELECTRICAL ROOF HARNESS	HL	121/ 210
Date of modification	Modified by	Description	Project rev.	G	Copyright by	Boat model	Title	Loc	Sheet

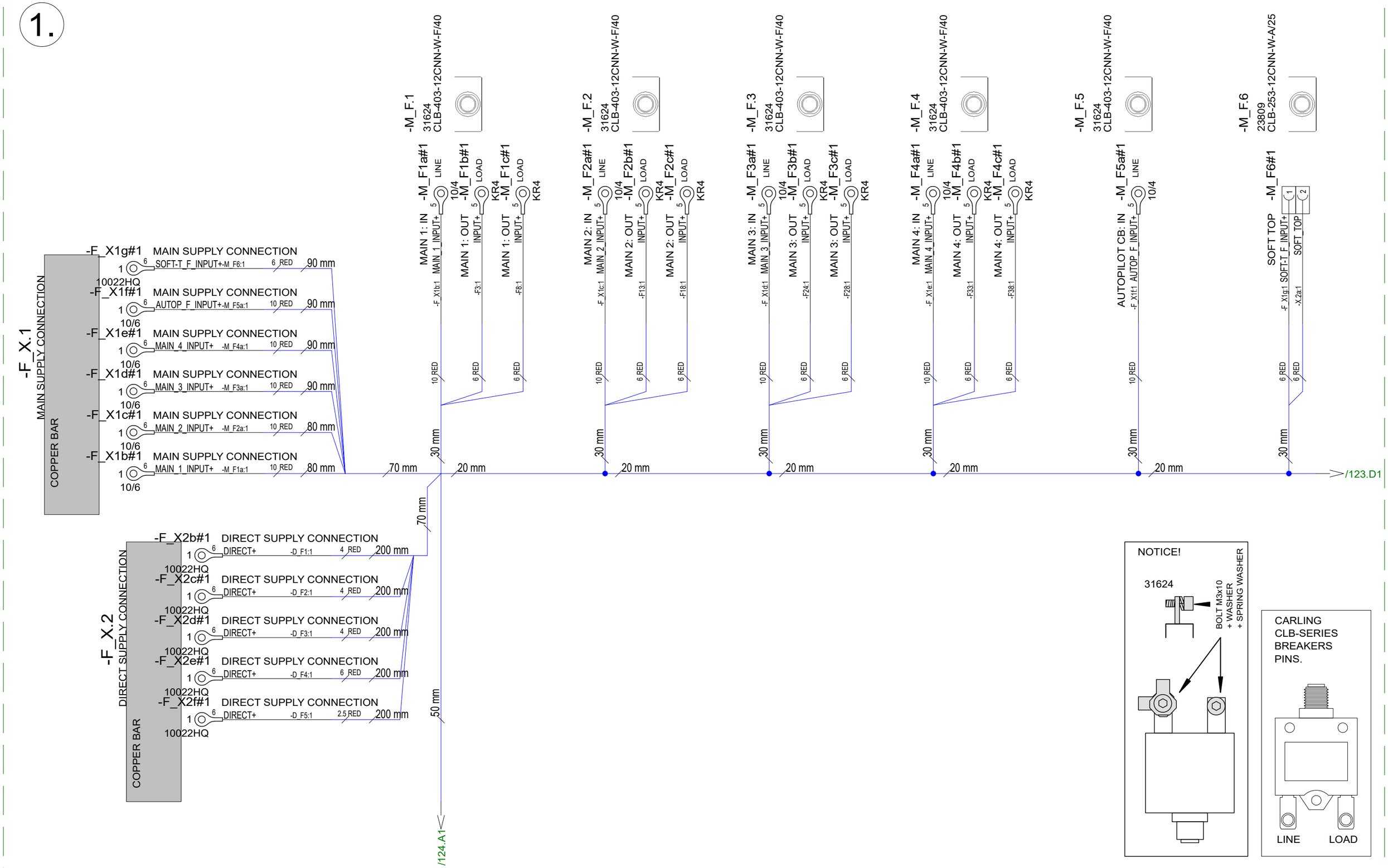

17.2.2023	RK	F9: -F18 NOW USED FOR WETBAR LT	Date	11.6.2019	NAVIX designed solutions	Axopar	SEE EXP. VIEW	29595
23.11.2023	PF	F10: 2004954; Changed livewell fuse to 3A	Drawing by	TuM		Boat	Sub-product code	Product code
13.4.2024	PF	G11: 2005054; F47 10A->16A, F3 15A->10A	Sheet rev.	11		37 MY20	FUSE UNIT	HL
Date of modification	Modified by	Description	Project rev.	G	Copyright by	Boat model	Title	Loc

Project ID

122 / 210
Sheet

2.

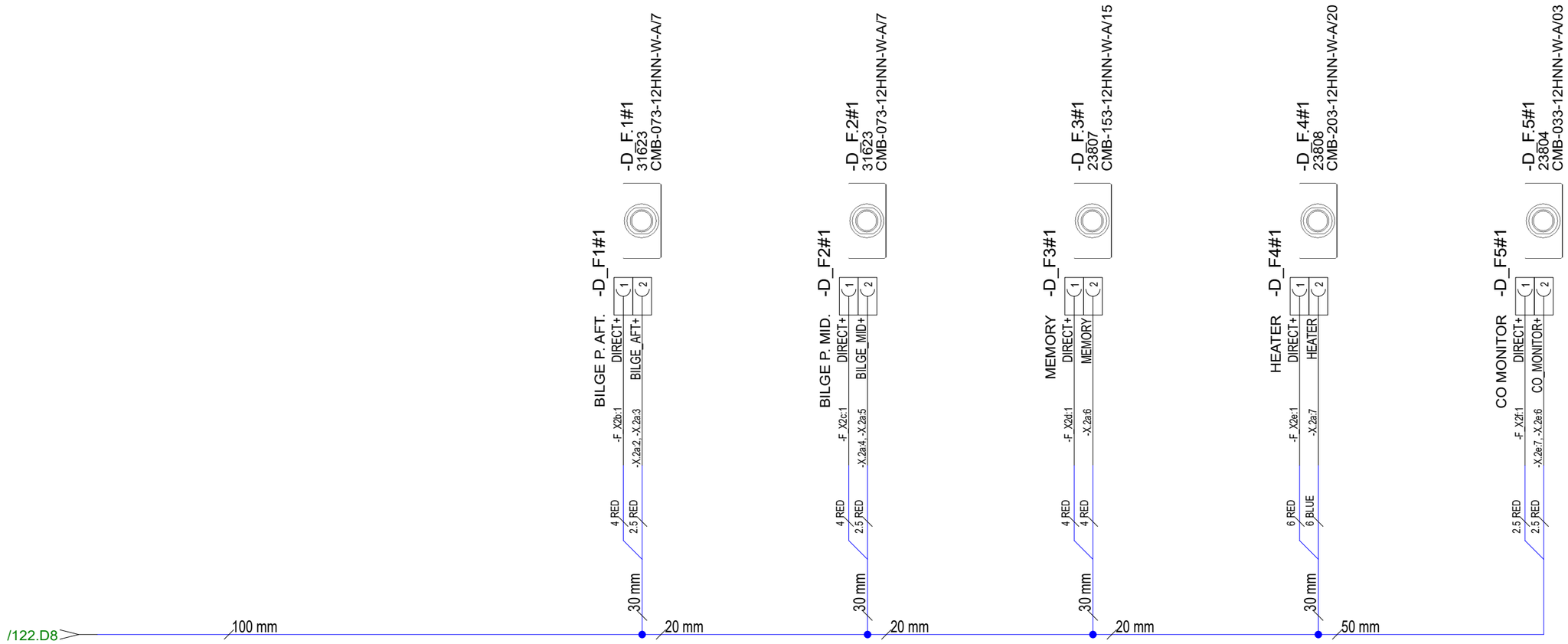

17.2.2023	RK	F9: -F18 NOW USED FOR WETBAR LT	Date 11.6.2019	NAVIX designed solutions	Axopar	SEE EXP. VIEW	29595	
23.11.2023	PF	F10: 2004954; Changed livewell fuse to 3A	Drawing by TuM		Boat	Sub-product code	Product code	Project ID
13.4.2024	PF	G11: 2005054; F47 10A->16A, F3 15A->10A	Sheet rev. 11		37 MY20	FUSE UNIT	HL	123 / 210
Date of modification	Modified by	Description	Project rev. G	Copyright by	Boat model	Title	Loc	Sheet

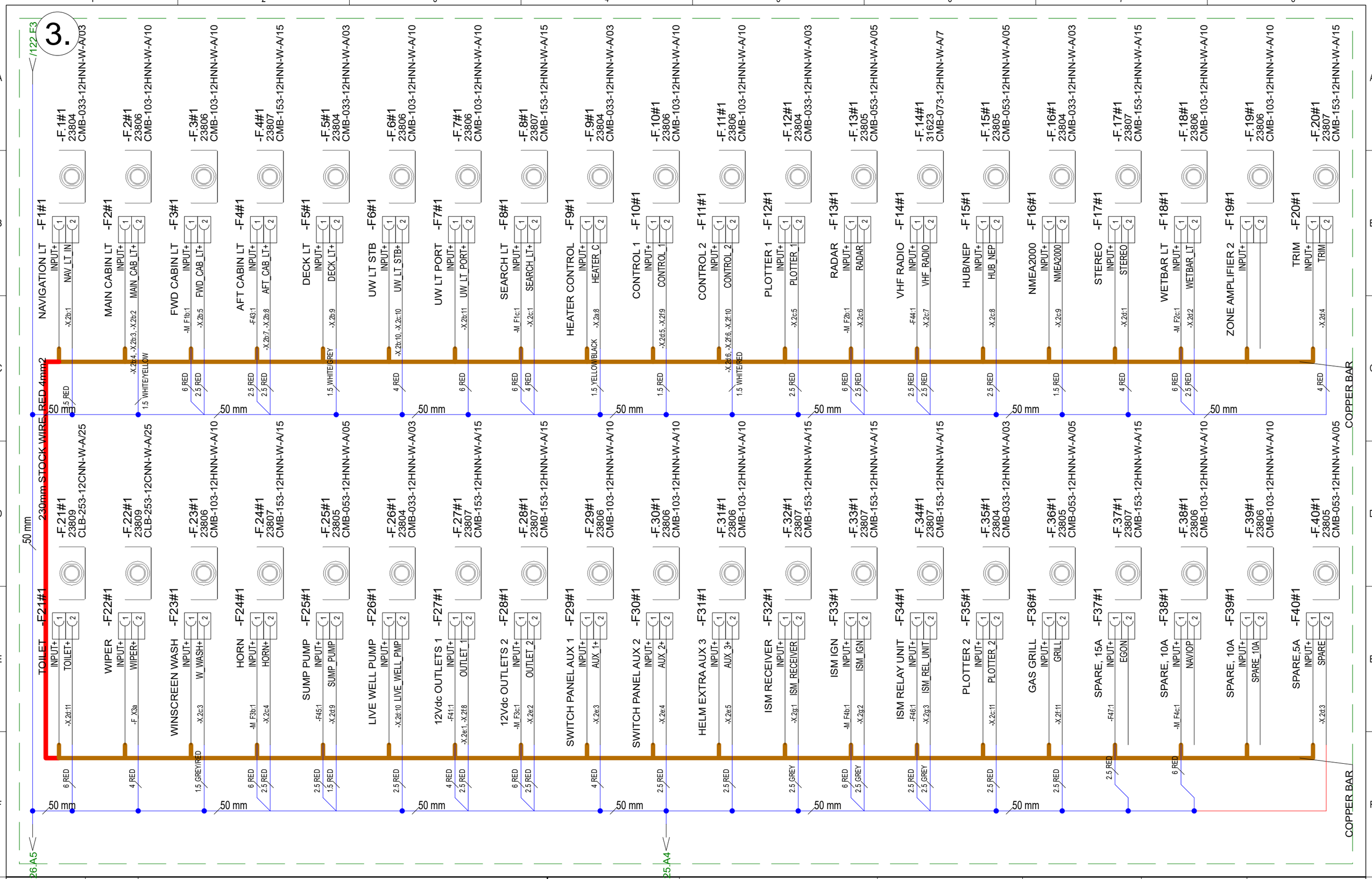

17.2.2023	RK	F9: -F18 NOW USED FOR WETBAR LT	Date	11.6.2019	NAVIX designed solutions	Axopar	SEE EXP. VIEW	29595
23.11.2023	PF	F10: 2004954; Changed livewell fuse to 3A	Drawing by	TuM		Boat	Sub-product code	Product code / Project ID
13.4.2024	PF	G11: 2005054; F47 10A->16A, F3 15A->10A	Sheet rev.	11		37 MY20	FUSE UNIT	HL
Date of modification	Modified by	Description	Project rev.	G	Copyright by	Boat model	Title	Loc / 124 / 210 Sheet

4.

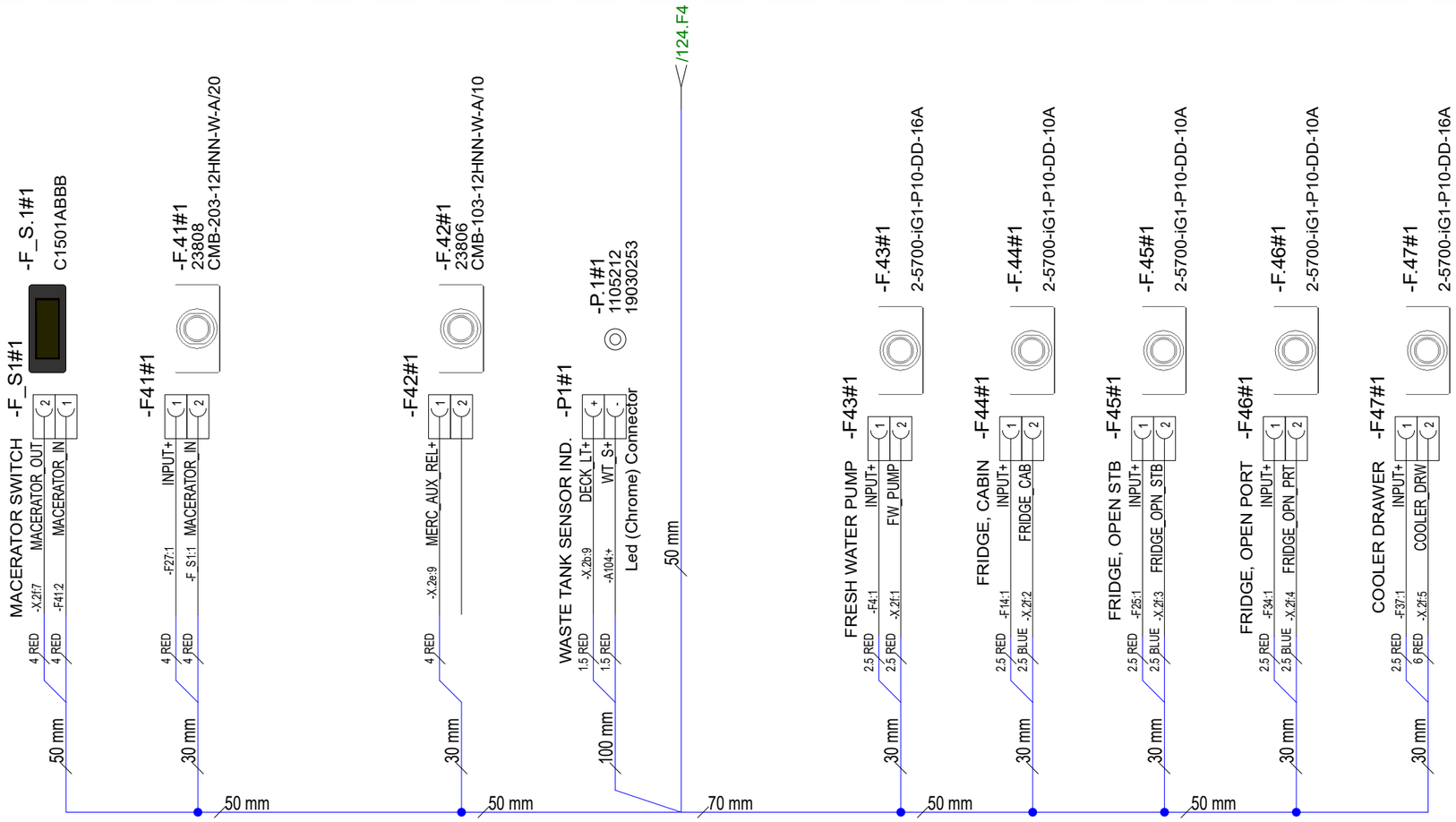

17.2.2023	RK	F9: -F18 NOW USED FOR WETBAR LT	Date 11.6.2019	NAVIX designed solutions	Axopar	SEE EXP. VIEW	29595	
23.11.2023	PF	F10: 2004954; Changed livewell fuse to 3A	Drawing by TuM		Boat	Sub-product code	Product code	Project ID
13.4.2024	PF	G11: 2005054; F47 10A->16A, F3 15A->10A	Sheet rev. 11		37 MY20	FUSE UNIT	HL	125 / 210
Date of modification	Modified by	Description	Project rev. G	Copyright by	Boat model	Title	Loc	Sheet

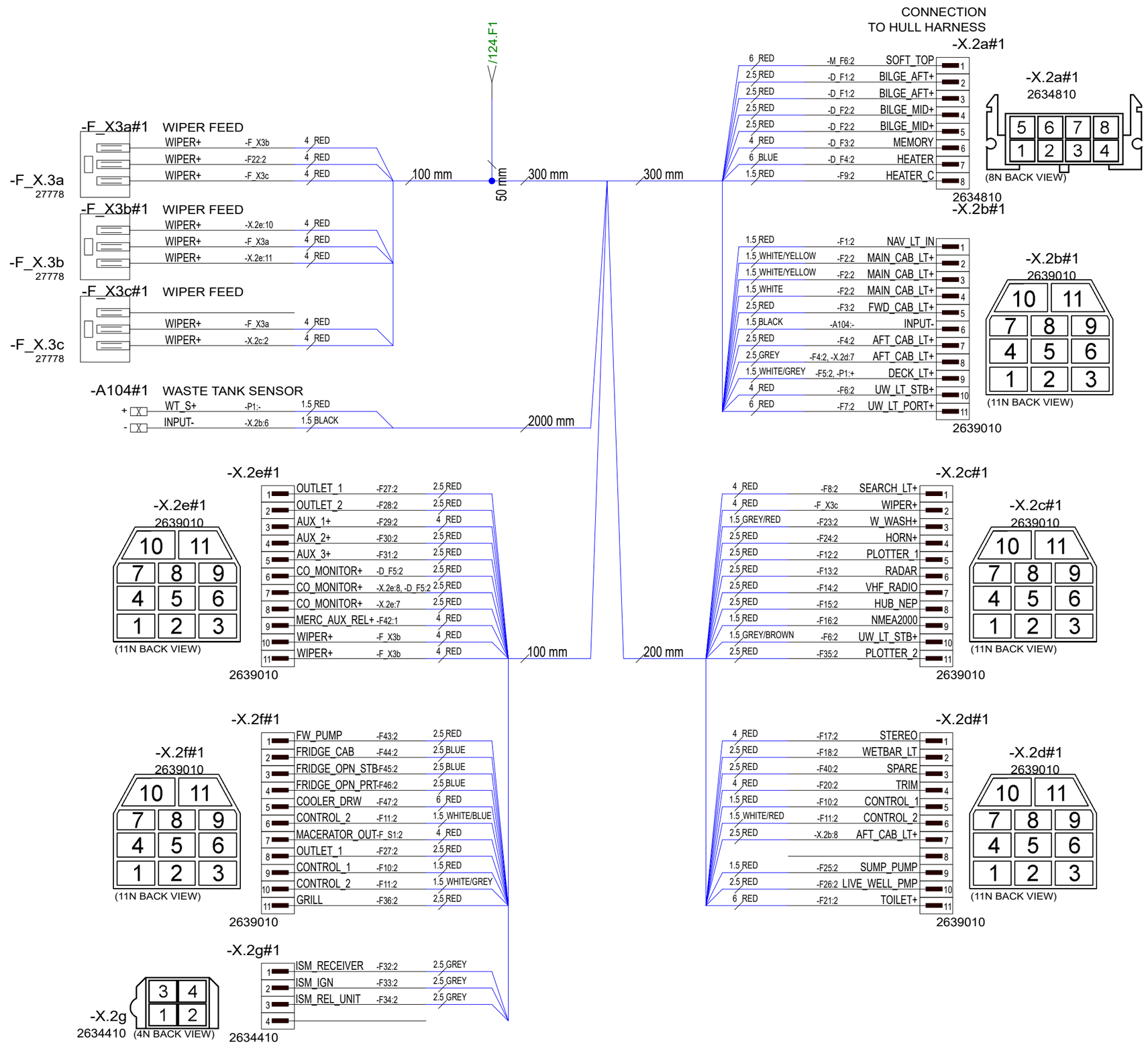

NOTICE!
VERIFY THAT ALL CABLES HAVE MARKINGS
SHOWN IN EXAMPLE BELOW.

EXEMPTION:
ALL <500mm WIRES AND BLACK WIRES
THIS MARKING IS NOT NEEDED.

MARKING

R2 ISO 6722 100V AWG16 +100 C

CABLE

EXAMPLE: RED 1,5mm2 WIRE MARKINGS.

Date of modification	Modified by	Description
17.2.2023	RK	F9: -F18 NOW USED FOR WETBAR LT
23.11.2023	PF	F10: 2004954; Changed livewell fuse to 3A
13.4.2024	PF	G11: 2005054; F47 10A->16A, F3 15A->10A

Date	11.6.2019
Drawing by	TuM
Sheet rev.	11
Project rev.	G

NAVIX designed solutions
Copyright by

Axopar Boat	SEE EXP. VIEW Sub-product code	29595 Product code	Project ID
37 MY20 Boat model	FUSE UNIT Title	HL Loc	126 / 210 Sheet

FUSE PANEL GENERAL LAYOUT/ LABELS

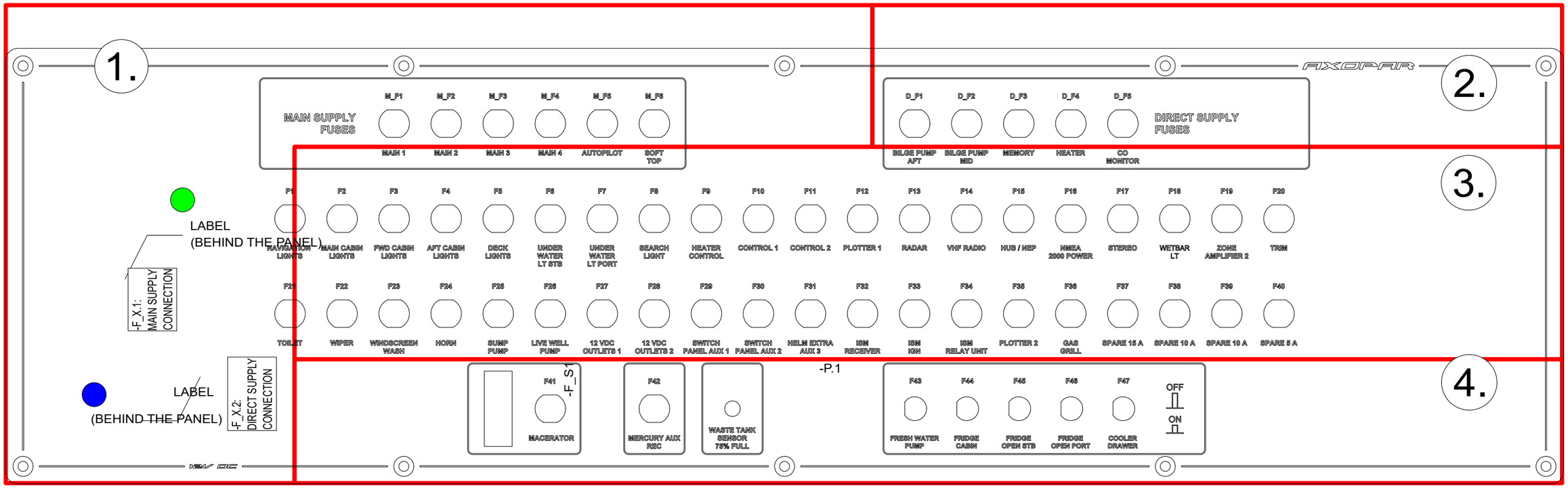

NOTICE!
LABELS BEHIND THE PANEL.

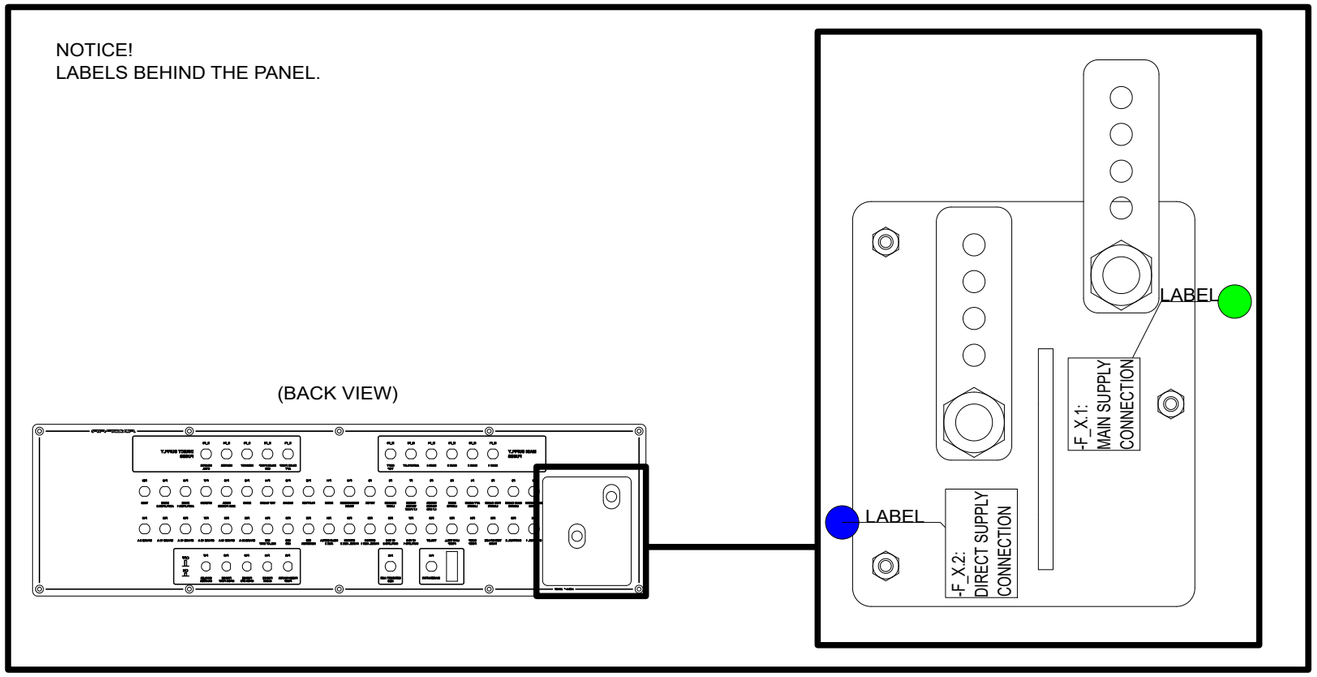

17.2.2023	RK	F9: -F18 NOW USED FOR WETBAR LT	Date 2.7.2019	NAVIX designed solutions	Axopar	SEE EXP VIEW	29595	
23.11.2023	PF	F10: 2004954; Changed livewell fuse to 3A	Drawing by TuM		Boat	Sub-product code	Product code	Project ID
13.4.2024	PF	G11: 2005054; F47 10A->16A, F3 15A->10A	Sheet rev. 11		37 MY20	FUSE UNIT	HL	127 / 210
Date of modification	Modified by	Description	Project rev. G	Copyright by	Boat model	Title	Loc	Sheet

EXP VIEW

29595_AXOPAR_37_MY20_FUSE_UNIT_PANEL

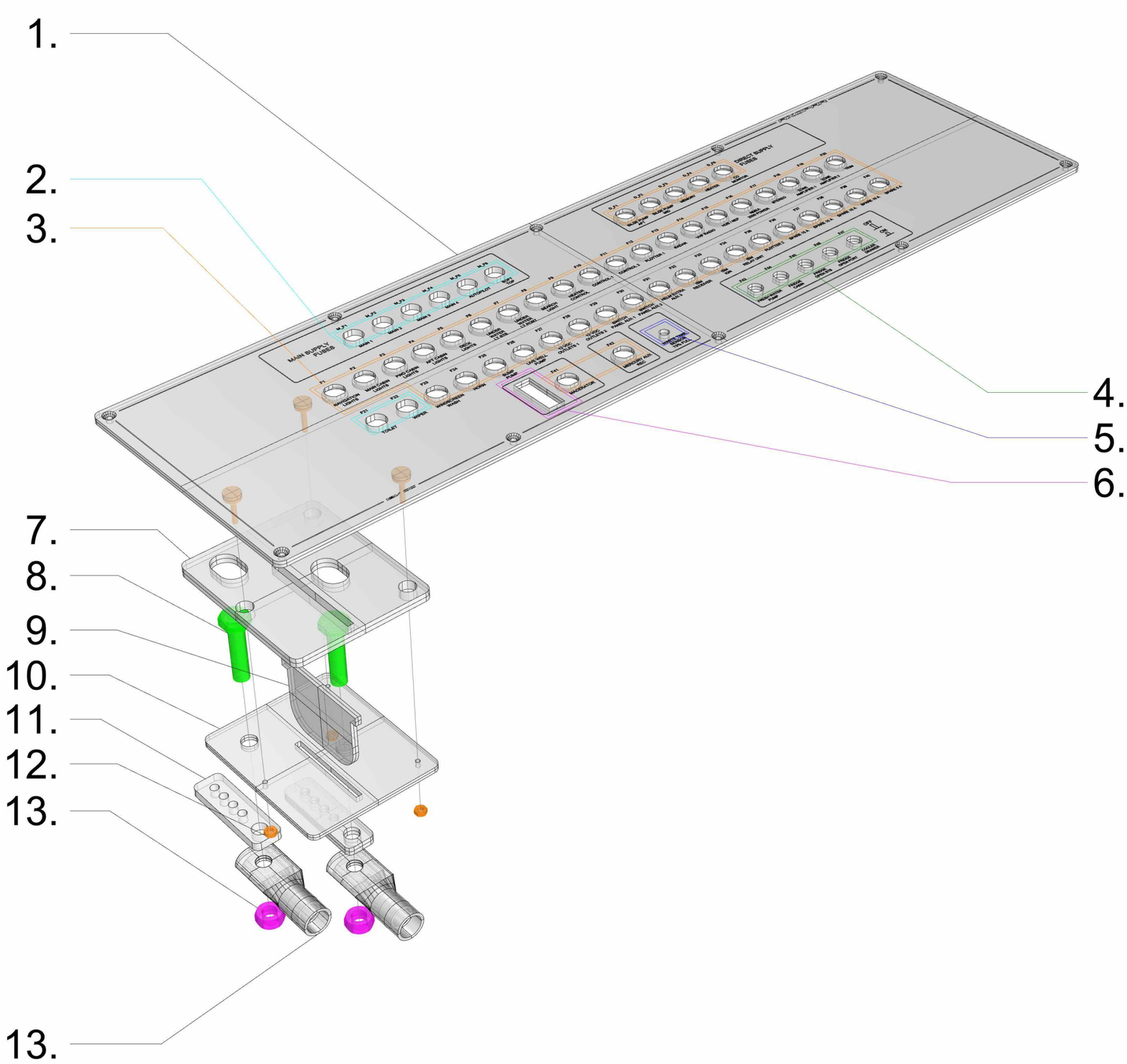

29595_AXOPAR_37_MY20_FUSE_UNIT_PANEL

1. 1 PCS 29916_AXOPAR_37_MY20_FUSE_UNIT_PANEL_(WOC)
2. 8 PCS CARLING CLB SERIES (AS IN DIAGRAM)
3. 45 PCS CARLING CMB SERIES (AS IN DIAGRAM)
4. 5 PCS ETA 1140 FUSE
5. 1 PC 19030253 LED PANEL MOUNT INDICATOR, SATIN CHROME BEZEL. RED. 12 VDC, 6mm 20mA, 13MCD, IP40
6. 1 PC ARCOLECTRIC_15...B_33.4X14.0
7. 1 PC 29918_AXOPAR_37_MY20_FUSE_UNIT_MS_DC_BTM_PANEL_(WOC)
8. 2 PCS M10 L40
9. 1 PC 29920_AXOPAR_37_MY20_FUSE_UNIT_MS_DC_SPACER_PANEL_(WOC)
10. 1 PC 29919_AXOPAR_37_MY20_FUSE_UNIT_MS_DC_TOP_PANEL_(WOC)
11. 2 PCS 30167_NAVIX_LINE_VIRTAKISKO_FOUR_SPOT_SMALL
12. 3 PCS M4 NUT A4
13. 2 PCS M10 SPRING WASHER
 2 PCS M10 NUT A4
14. 2 PCS CABLE SHOES (AS IN DIAGRAM)

TE 01.07.2019
TE 11.09.2019
MN 23.01.2020
TE 17.02.2021

Date of modification	Modified by	Description
17.2.2023	RK	F9: -F18 NOW USED FOR WETBAR LT
23.11.2023	PF	F10: 20049954; Changed livewell fuse to 3A
13.4.2024	PF	G11: 20050054; F47 10A->16A, F3 15A->10A

Date 11.6.2019
Drawing by TuM
Sheet rev. 11
Project rev. G

Boat: Axopar
Boat model: 37 MY20
Sub-product code: SEE EXP. VIEW
Product code: 29595
Title: FUSE UNIT
Loc: HL
Project ID:
Sheet: 128 / 210

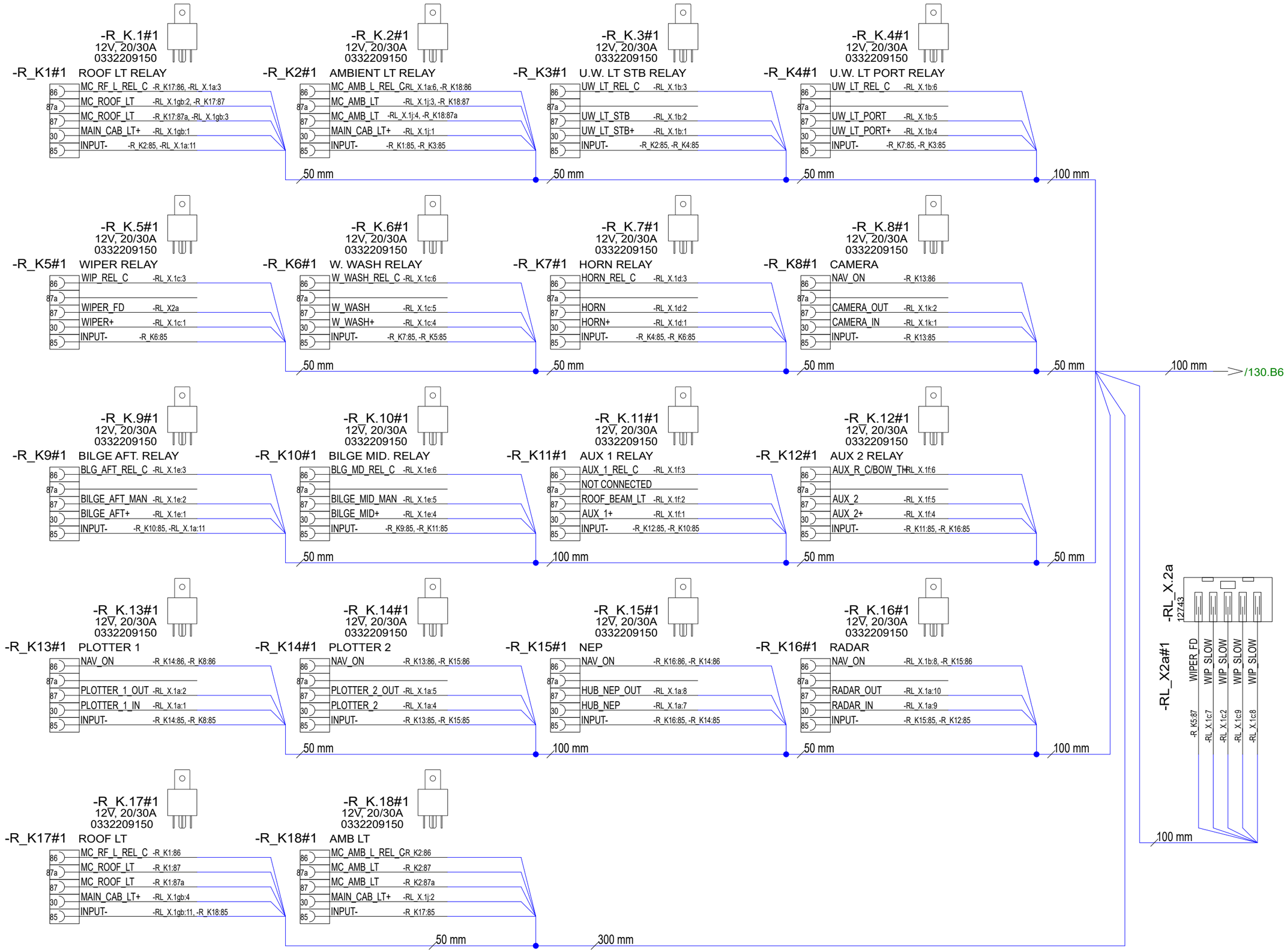

17.2.2023	RK	F5: NOT MODIFIED.	Date	22.5.2019	NAVIX designed solutions	Axopar		29596
13.4.2024	PF	G6: 2005054; R_K13..18 added, -RL_X.1g..j added	Drawing by	TuM		Boat	Sub-product code	Product code / Project ID
30.7.2024	PF	G7: 2005139; R_K8 added	Sheet rev.	7		37 MY20	RELAY UNIT	HL
Date of modification	Modified by	Description	Project rev.	G	Copyright by	Boat model	Title	Loc / 129 / 210 Sheet

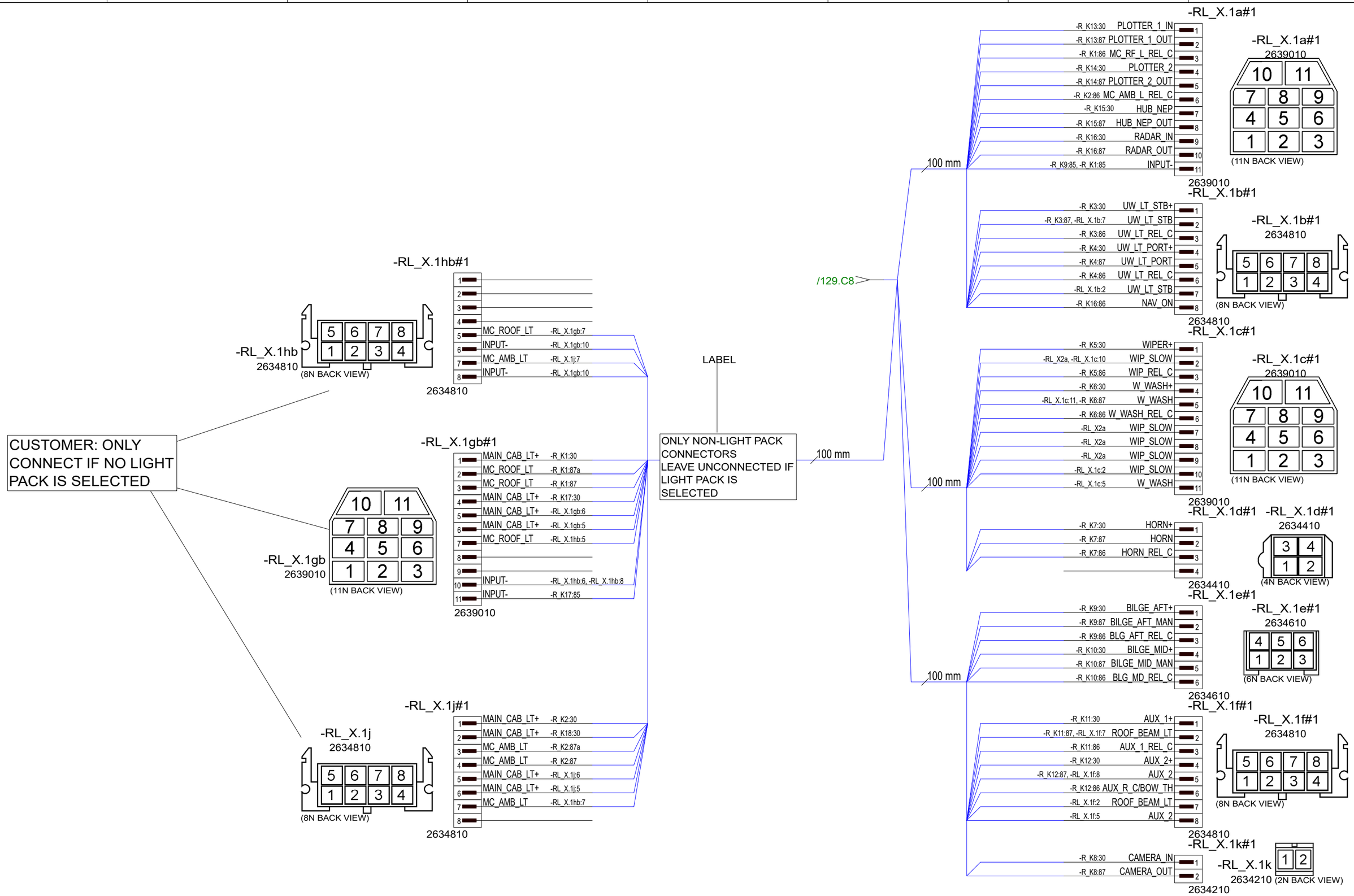

17.2.2023	RK	F5: NOT MODIFIED.	Date	22.5.2019	NAVIX designed solutions	Axopar		29596	
13.4.2024	PF	G6: 2005054; R_K13..18 added, -RL_X.1g..j added	Drawing by	TuM		Boat	Sub-product code	Product code	Project ID
30.7.2024	PF	G7: 2005139; R_K8 added	Sheet rev.	7		37 MY20	RELAY UNIT	HL	130 / 210
Date of modification	Modified by	Description	Project rev.	G	Copyright by	Boat model	Title	Loc	Sheet

INSTRUCTIONS FOR ATTACHING CABLES/ RELAYS
TO RELAY HOLDER:

1. PULL SECONDARY LOCK OUT OF RELAY HOLDER
   APPROX 1cm WITH TOOL IF NEEDED
   (DO NOT PULL COMPLETELY OUT)
2. MOUNT WIRES
3. PUSH SECONDARY LOCK BACK IN
4. MOUNT RELAY TO RELAY HOLDER

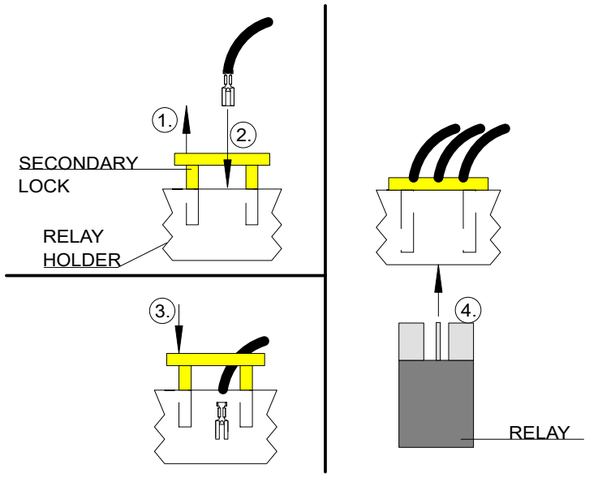

PIN ORDER

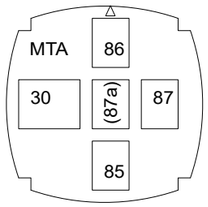

SECONDARY LOCK

SEEN FROM
WIRING SIDE
(BACK VIEW)

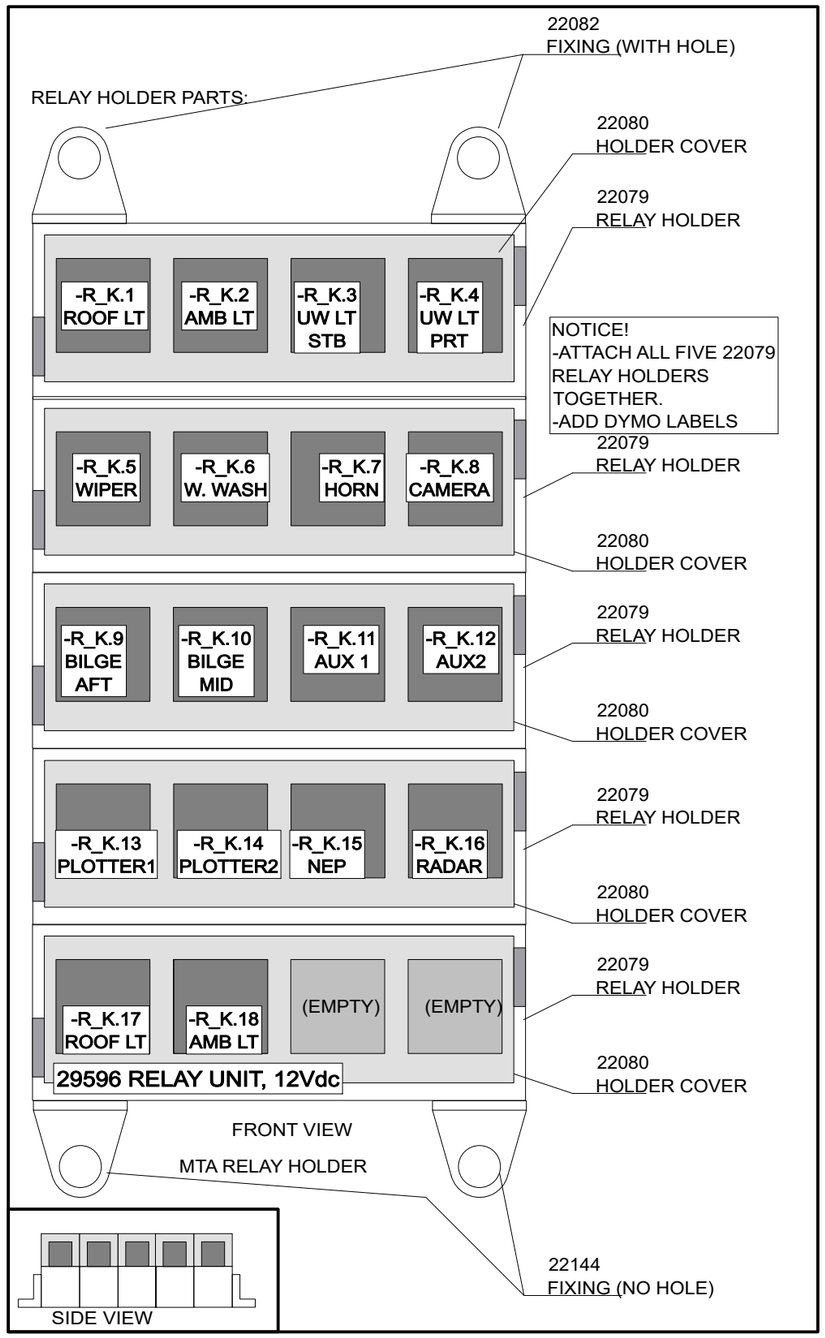

NOTICE!
VERIFY THAT ALL CABLES HAVE MARKINGS
SHOWN IN EXAMPLE BELOW.
EXEMPTION:
ALL <500mm WIRES AND BLACK WIRES
THIS MARKING IS NOT NEEDED.

MARKING

R2 ISO 6722 100V AWG16 +100 C

EXAMPLE: RED 1,5mm2 WIRE MARKINGS.

CABLE

Date of modification	Modified by	Description
13.4.2024	PF	G6: 2005054; R_K13..18 added, -RL_X.1g..j added
30.7.2024	PF	G7: 2005139; R_K8 added

Date	15.3.2024
Drawing by	TuM
Sheet rev.	7
Project rev.	G

NAVIX designed solutions
Copyright by

Axopar		29596	
Boat	Sub-product code	Product code	Project ID
37 MY20	RELAY UNIT	HL	131/ 210
Boat model	Title	Loc	Sheet

NOTICE!
VERIFY THAT ALL CABLES HAVE MARKINGS
SHOWN IN EXAMPLE BELOW.

EXEMPTION:
ALL <500mm WIRES, BLACK WIRES AND HI-FLEX CABLES
THIS MARKING IS NOT NEEDED.

MARKING

R2 ISO 6722 100V AWG16 +100 C

CABLE

EXAMPLE: RED 1,5mm2 WIRE MARKINGS.

NOTICE!
BATTERY CABLES NEED TO ADD MARKINGS
SHOWN IN EXAMPLE BELOW.

EXEMPTION:
ALL BLACK WIRES
THIS MARKING IS NOT NEEDED.

MARKING

BT-SK 750V AWG2 +100 C

CABLE

EXAMPLE: RED 50mm2 WIRE MARKINGS.

MARKING SHOWN ABOVE ONLY TO CABLES LISTED BELOW.

LOOK FOR EQUIVALENT AWG SIZE FOR mm2
AND ADD THIS TO CABLE MARKINGS.

FOR EXAMPLE:
CABLE SIZE IS 70mm2 --> MARKING AWG2/0.

EQUIVALENCY:

mm2		AWG
25 mm2	=	AWG3
35 mm2	=	AWG2
50 mm2	=	AWG0
70 mm2	=	AWG2/0
95 mm2	=	AWG3/0
120 mm2	=	250 kcmil

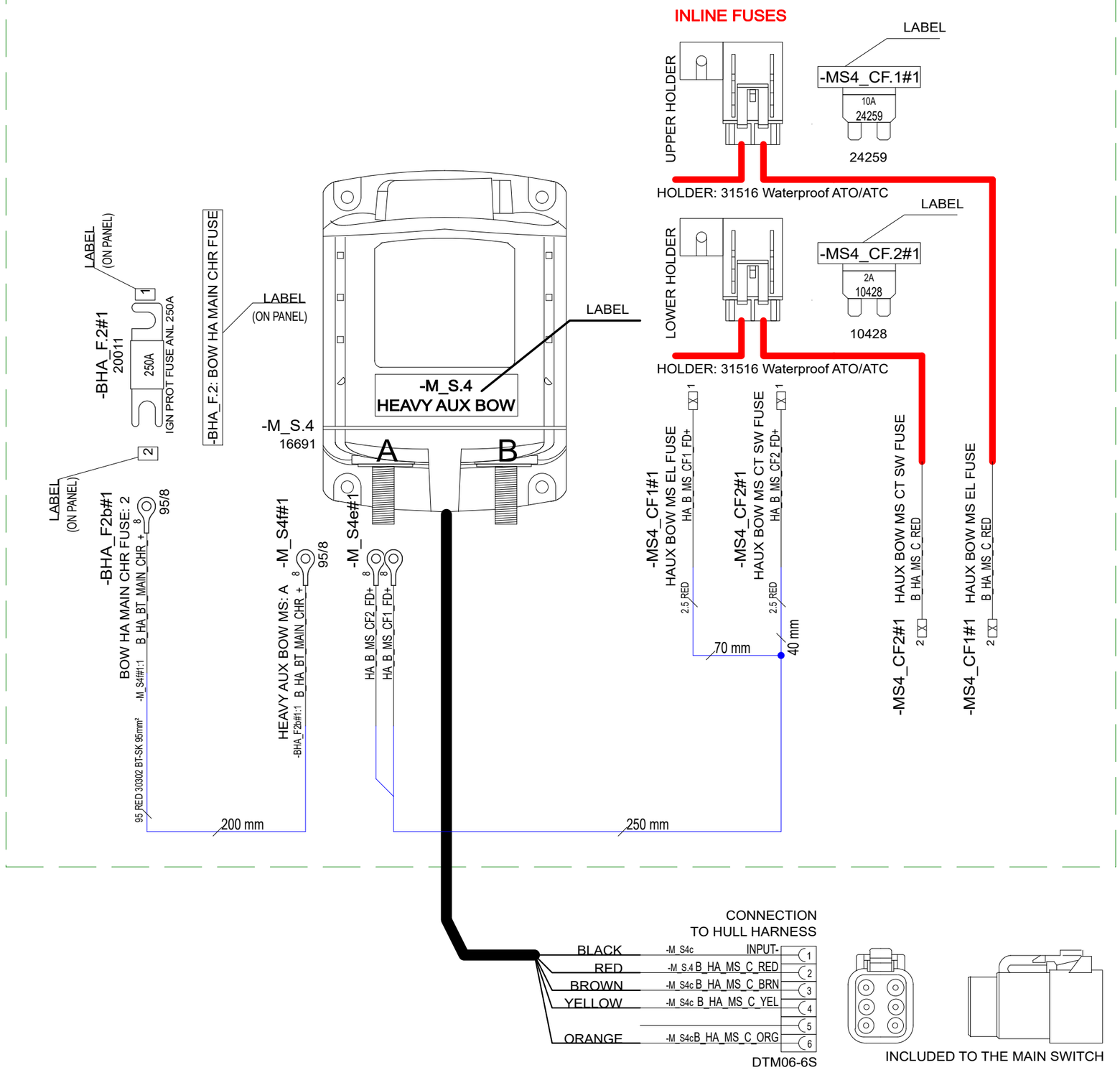

NOTICE!
INSTALL CABLES TO DEVICE SO THAT
LARGEST TERMINALS ARE CLOSEST
TO DEVICES CONDUCTIVE AREA.

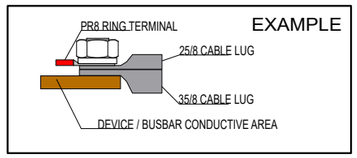

CONNECTION
TO HULL HARNESS

BLACK	-M_S4c	INPUT-	1
RED	-M_S.4	B_HA_MS_C_RED	2
BROWN	-M_S4c	B_HA_MS_C_BRN	3
YELLOW	-M_S4c	B_HA_MS_C_YEL	4
			5
ORANGE	-M_S4c	B_HA_MS_C_ORG	6

DTM06-6S

INCLUDED TO THE MAIN SWITCH

15.4.2024	PF	G6: 2005054; Not modified	
22.9.2021	VV	E5: NOT MODIFIED / REVISION RETURNED TO REV. E.	
17.2.2023	RK	F6: FUSE HOLDERS CHANGED TO 31516.	
Date of modification	Modified by	Description	

Date
Drawing by TuM
Sheet rev. 6
Project rev. G

NAVIX designed solutions
Copyright by

Axopar
Boat

SEE EXP VIEW
Sub-product code

29597
Product code

Project ID

37 MY20
Boat model

BOW HEAVY AUX
MAIN SWITCH UNIT
Title

HL
Loc

132 / 210
Sheet

GENERAL LAYOUT / LABLES / CABLE ROUTES

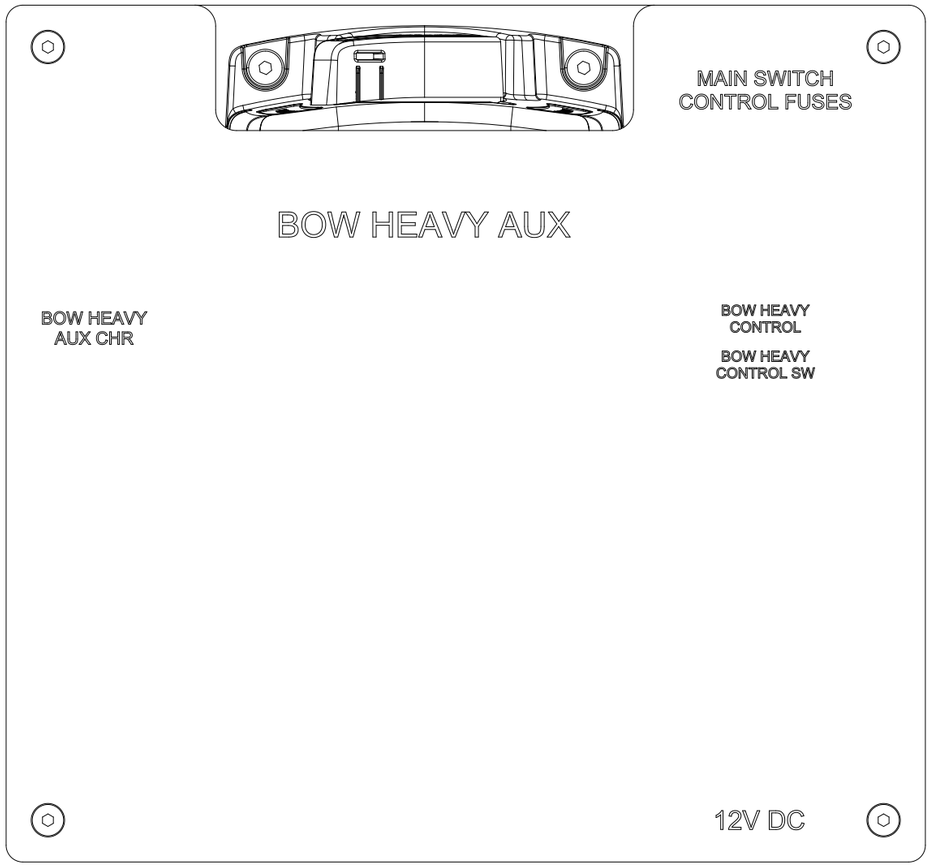

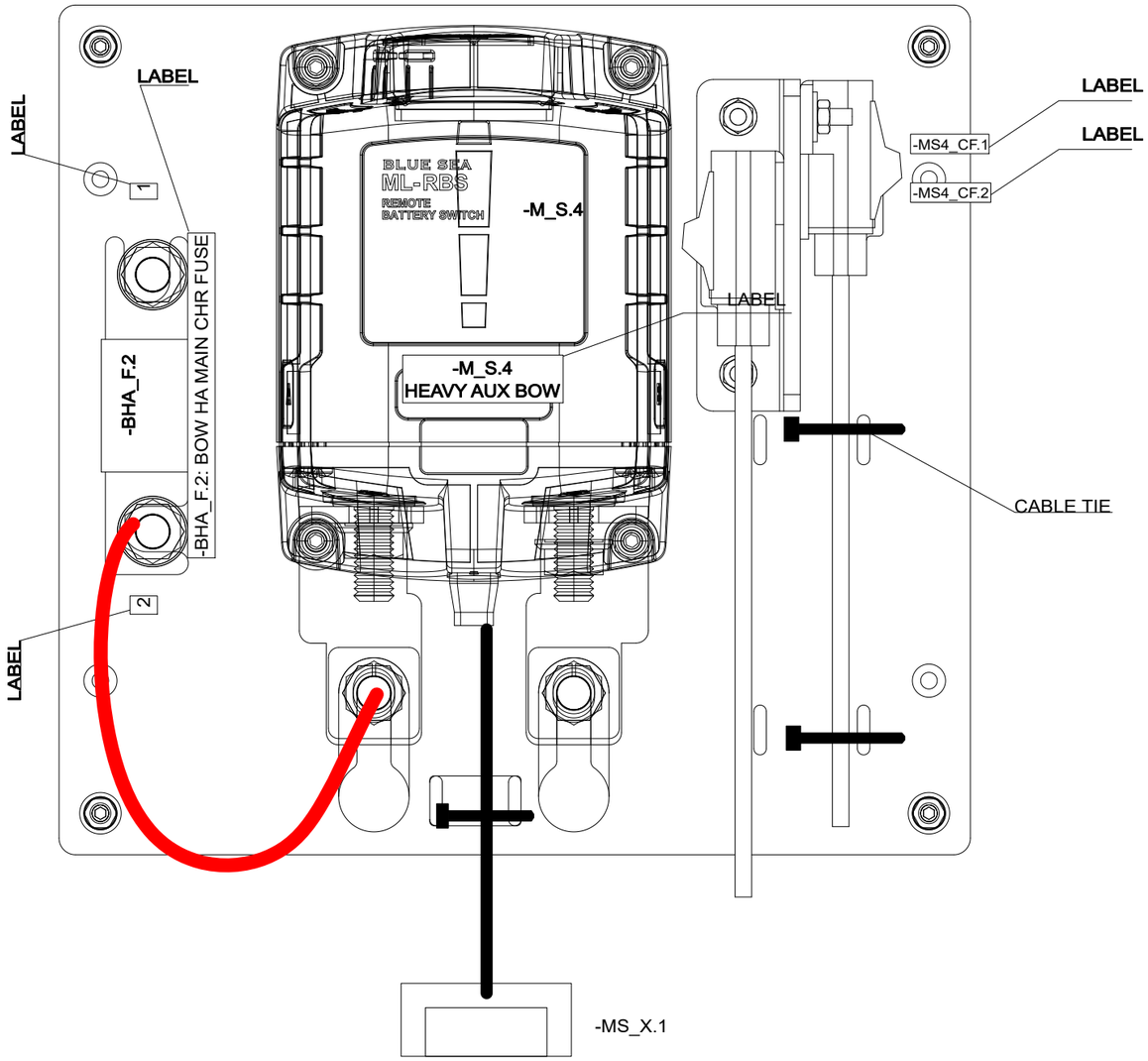

15.4.2024	PF	G6: 2005054; Not modified	Date	NAVIX designed solutions	Axopar	SEE EXP VIEW	29597	
22.9.2021	VV	E5: NOT MODIFIED / REVISION RETURNED TO REV. E.	Drawing by TuM		Boat	Sub-product code	Product code	Project ID
17.2.2023	RK	F6: FUSE HOLDERS CHANGED TO 31516.	Sheet rev. 6		37 MY20	BOW HEAVY AUX MAIN SWITCH UNIT	HL	133 / 210
Date of modification	Modified by	Description	Project rev. G	Copyright by	Boat model	Title	Loc	Sheet

EXP VIEW

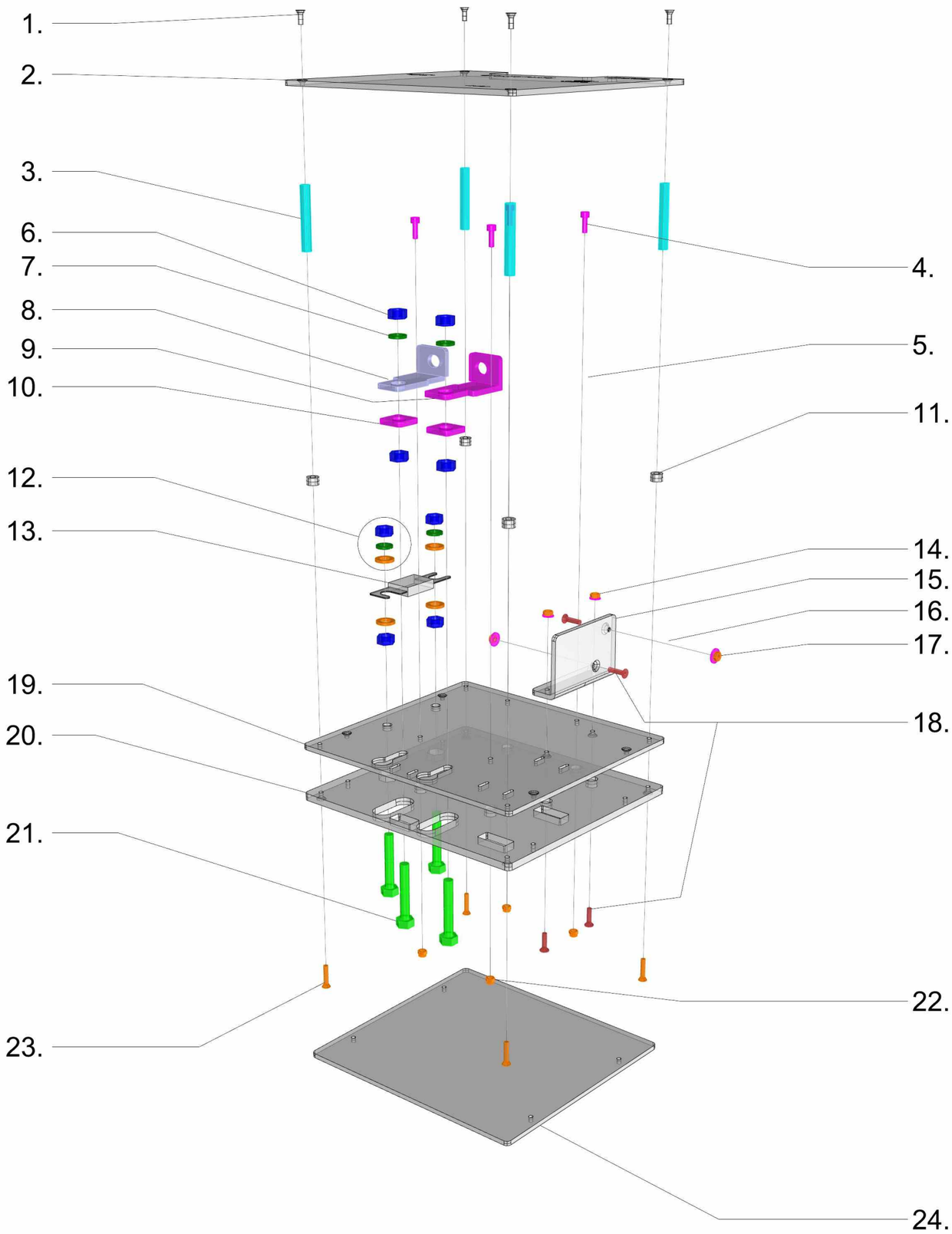

29597_AXOPAR_37_MY20_BOW_HEAVY_AUX_MAIN_SWITCH_UNIT

29597_AXOPAR_37_MY20_BOW_HEAVY_AUX_MAIN_SWITCH_UNIT

1. 4PCS VMI30914 Countersunk Head Screw M4x10 DIN7991
2. 1PC 29868_AXOPAR_37_MY20_BOW_HEAVY_ AUX_MSU_COVER_(WOC)
3. 4PCS VMI32041 Extension Bolt M4-L50mm
4. 4PCS VMI30944 HEX SOCKET HEAD CAP SCREW M4X12 DIN912

5. 1PC BLUE SEA ML-RBS
6. 4PCS VMI32012 HEX NUT M8 DIN934
7. 2PCS VMI32011 SPRING LOCK WASHER M8 DIN127
8. 1PC 20329_VIRTAKISKO_BLUE_SEA_ML_SHORT_LEFT
9. 1PC 20330_VIRTAKISKO_BLUE_SEA_ML_SHORT_RIGHT
10. 2PCS 3667
11. 4PCS 18455_NAVIX_LINE_6mm_ABS_SPACER_FOR_M5
12. 4PCS VMI32012 HEX NUT M8 DIN934
    2PCS VMI32011 SPRING LOCK WASHER M8 DIN127
    4PCS VMI32013 Flat Washer for HEX bolts and nuts M8 DIN125A
13. 1PC ANL (as in diagram)

14. 2PCS VMI30904 SPRING LOCK WASHER M4 DIN127
    2PCS VMI30905 HEX NUT M4 DIN934
15. 1PC 38604_NAVIX_LINE_BRACKET_FOR_31516_FUSEHOLDER_(WOC)
16. 2PCS 31516_Fuseholder waterproof ATO ATC 5065B-BSS
17. 2PCS VMI30906 Flat Washer for HEX bolts and nuts M4 DIN125A
    2PCS VMI30905 HEX NUT M4 DIN934
18. 4PCS VMI30917 COUNTERSUNK HEAD SCREW HEX SOCKET M4X16 DIN7991
19. 1PC 29869_AXOPAR_37_MY20_BOW_HEAVY_AUX_MSU_TOP_(WOC)
20. 1PC 29870_AXOPAR_37_MY20_BOW_HEAVY_AUX_MSU_MID_(WOC)
21. 4PCS VMI32021 HEX BOLT FULL THREAD M8X50 DIN933
22. 4PCS VMI30818 Self-locking Hexagon Nut M4 DIN985
23. 4PCS VMI30918 Countersunk Head Screw M4x20 DIN7991
24. 1PC 29871_AXOPAR_37_MY20_BOW_HEAVY_AUX_ MSU_BOTTOM_(WOC)
    4PCS CONNECT 29871 WITH CABLE TIE DURING TRANSPORTATION

TE 10.06.2019
TE 15.03.2023

Date of modification	Modified by	Description	Date
15.4.2024	PF	G6: 2005054; Not modified	
22.9.2021	VV	E5: NOT MODIFIED / REVISION RETURNED TO REV. E.	
17.2.2023	RK	F6: FUSE HOLDERS CHANGED TO 31516.	

Drawing by: TuM
Sheet rev.: 6
Project rev.: G

NAVIX designed solutions

Copyright by

Axopar
Boat: 37 MY20
Boat model

SEE EXP VIEW
Sub-product code

29597
Product code

Project ID

BOW HEAVY AUX MAIN SWITCH UNIT
Title

HL
Loc

134 / 210
Sheet

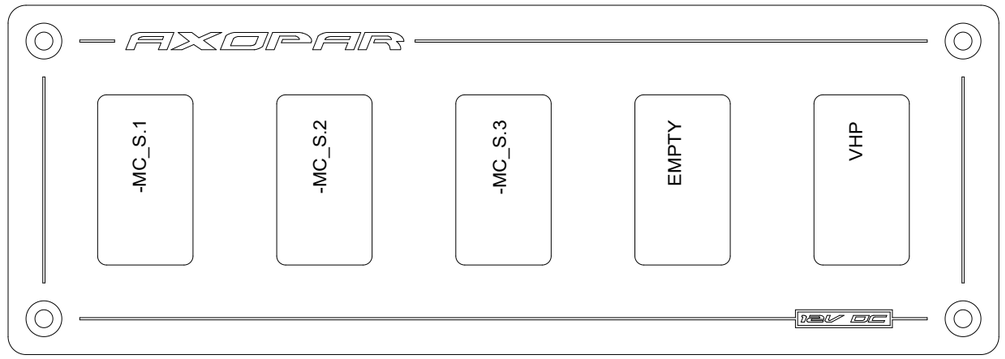

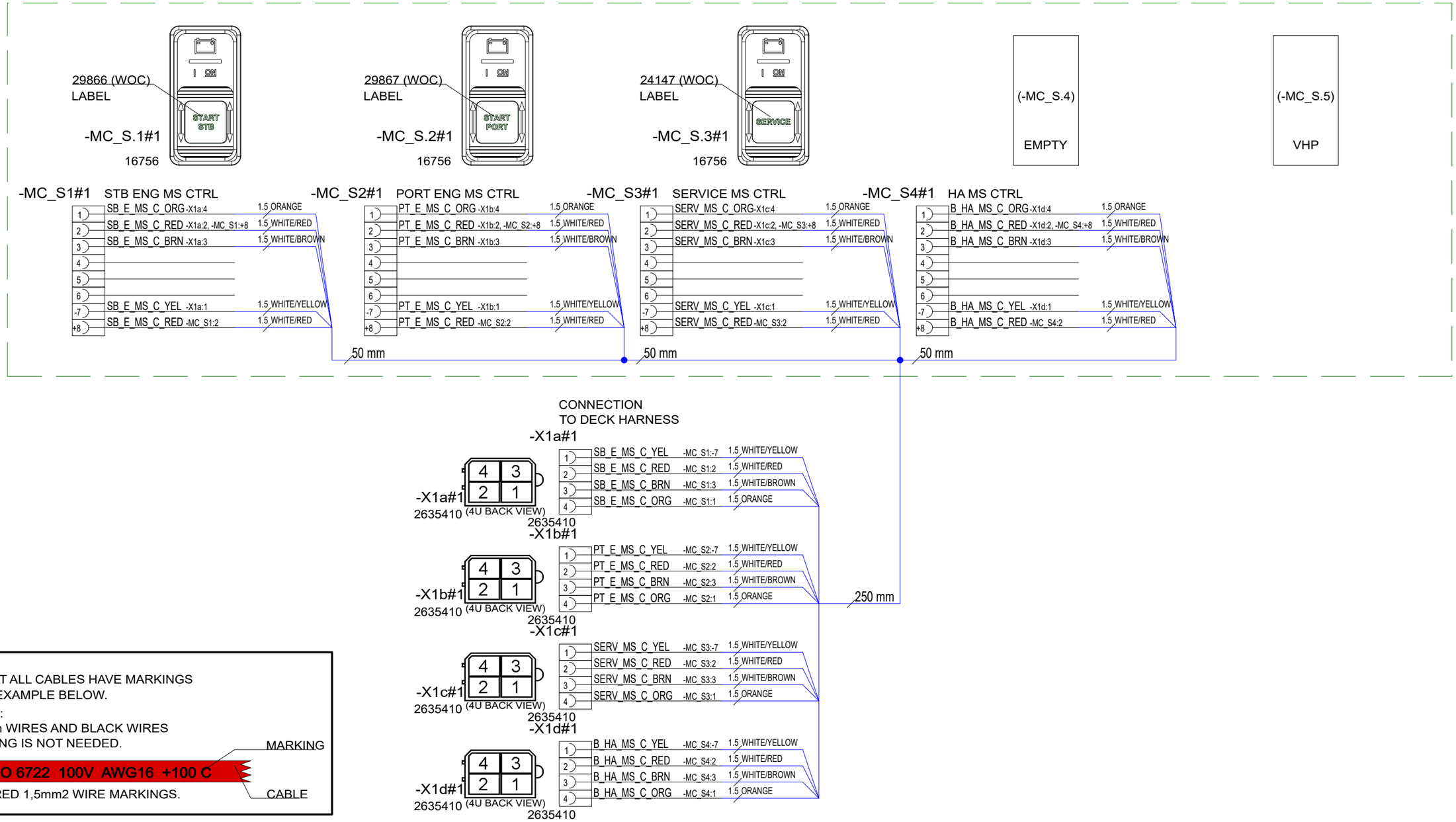

NOTICE!
VERIFY THAT ALL CABLES HAVE MARKINGS
SHOWN IN EXAMPLE BELOW.

EXEMPTION:
ALL <500mm WIRES AND BLACK WIRES
THIS MARKING IS NOT NEEDED.

MARKING

R2 ISO 6722 100V AWG16 +100 C

CABLE

EXAMPLE: RED 1,5mm2 WIRE MARKINGS.

22.9.2021	TT	E3: NOT MODIFIED / REVISION RETURNED TO REV. E.	Date 22.5.2019	NAVIX designed solutions	Axopar	29865	29599	
17.2.2023	RK	F3: NOT MODIFIED.	Drawing by TuM		Boat	Sub-product code	Product code	Project ID
19.4.2024	PF	G3: 2005054; Not modified	Sheet rev. 3		37 MY20	MAIN SWITCH CONTROL PANEL	HL	135 / 210
Date of modification	Modified by	Description	Project rev. G	Copyright by	Boat model	Title	Loc	Sheet

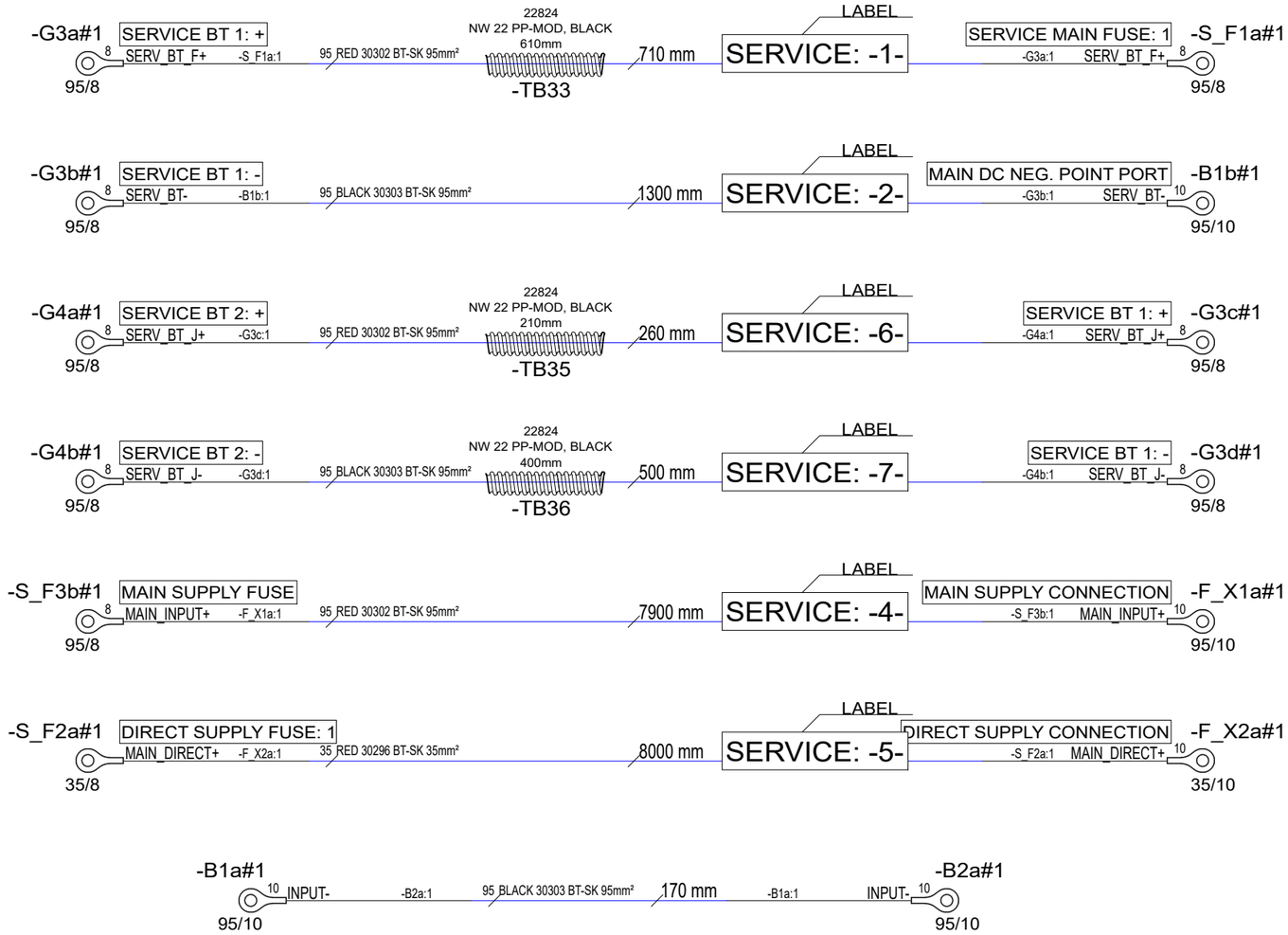

NOTICE! CABLES WITH STICKER

FOR EXAMPLE

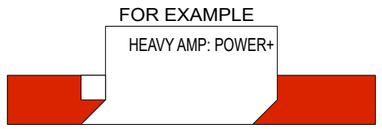

NOTICE!
BATTERY CABLES NEED TO ADD MARKINGS
SHOWN IN EXAMPLE BELOW.

EXEMPTION:
ALL BLACK WIRES
THIS MARKING IS NOT NEEDED.

MARKING

BT-SK 750V AWG2 +100 C

CABLE

EXAMPLE: RED 50mm2 WIRE MARKINGS.

MARKING SHOWN ABOVE ONLY TO CABLES LISTED BELOW.

LOOK FOR EQUIVALENT AWG SIZE FOR mm2
AND ADD THIS TO CABLE MARKINGS.

FOR EXAMPLE:
CABLE SIZE IS 70mm2 --> MARKING AWG2/0.

EQUIVALENCY:

mm2		AWG
25 mm2	=	AWG3
35 mm2	=	AWG2
50 mm2	=	AWG0
70 mm2	=	AWG2/0
95 mm2	=	AWG3/0
120 mm2	=	250 kcmil

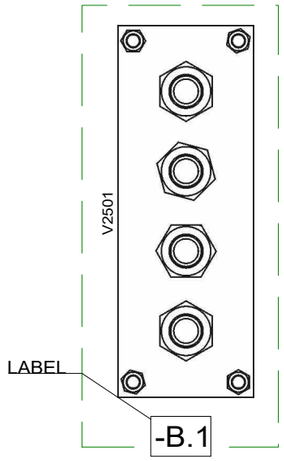

MAIN DC NEG. POINT PORT

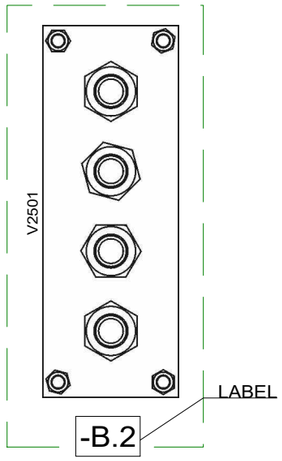

MAIN DC NEG. POINT STB

Date of modification	Modified by	Description
30.7.2024	PF	G5: 2005139; Cable lug changes
17.2.2023	RK	F4: NOT MODIFIED.
19.4.2024	PF	G4: 2005054; Not modified

Date	22.5.2019
Drawing by	TuM
Sheet rev.	5
Project rev.	G

NAVIX designed solutions
Copyright by

Axopar Boat		29601 Product code	Project ID
37 MY20 Boat model	SERVICE MAIN SUPPLY CABLES Title	HL Loc	136 / 210 Sheet

NOTICE!
BATTERY CABLES NEED TO ADD MARKINGS
SHOWN IN EXAMPLE BELOW.

EXEMPTION:
ALL BLACK WIRES
THIS MARKING IS NOT NEEDED.

MARKING

R2 ISO 6722 100V AWG6 +100 C

CABLE

EXAMPLE: RED 16mm2 WIRE MARKINGS.

MARKING SHOWN ABOVE ONLY TO CABLES LISTED BELOW.

LOOK FOR EQUIVALENT AWG SIZE FOR mm2
AND ADD THIS TO CABLE MARKINGS.

FOR EXAMPLE:
CABLE SIZE IS 25mm2 --> MARKING AWG3.

EQUIVALENCY:

mm2		AWG
10 mm2	=	AWG8
16 mm2	=	AWG6
25 mm2	=	AWG3
35 mm2	=	AWG2

NOTICE! CABLES WITH STICKER

FOR EXAMPLE

HEAVY AMP: POWER+

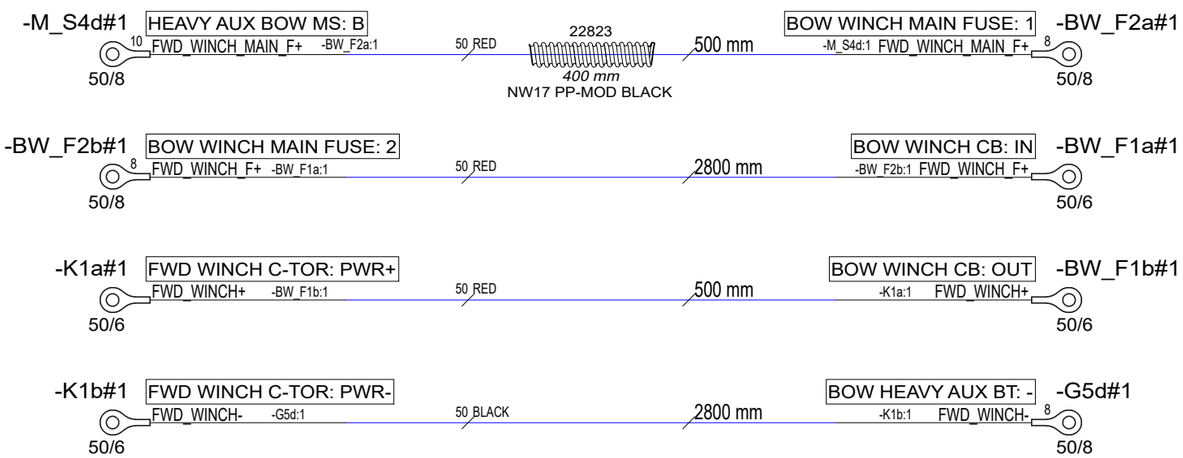

INCLUDED

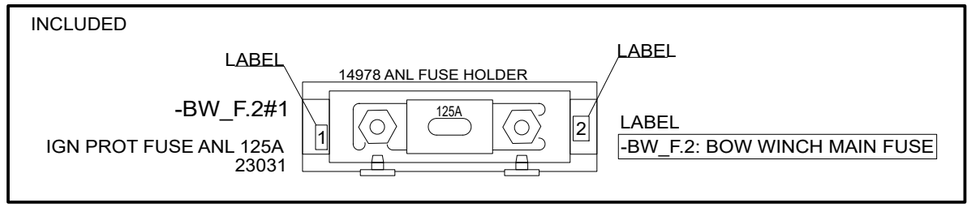

LABEL INSTRUCTIONS

NOTICE! PUT LABELS TO FUSE HOLDER
BASE - NOT TO COVER.

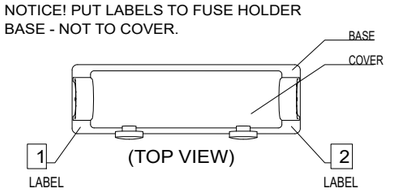

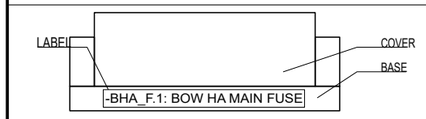

(SIDE VIEW)
(with cover)

Date of modification	Modified by	Description
19.4.2024	PF	G4: 2005054; Not modified
30.7.2024	PF	G5: 2005139; G5d cable lug change
17.10.2023	PF	F4: 2004916; Cable and fuse sizes increased

Date	22.5.2019
Drawing by	TuM
Sheet rev.	5
Project rev.	G

NAVIX designed solutions
Copyright by

Axopar			
Boat	Sub-product code	29603 Product code	Project ID
37 MY20	BOW WINCH CABLE SET	HL	137 / 210
Boat model	Title	Loc	Sheet

NOTICE!
BATTERY CABLES NEED TO ADD MARKINGS
SHOWN IN EXAMPLE BELOW.

EXEMPTION:
ALL BLACK WIRES
THIS MARKING IS NOT NEEDED.

MARKING

R2 ISO 6722 100V AWG6 +100 C

CABLE

EXAMPLE: RED 16mm2 WIRE MARKINGS.

MARKING SHOWN ABOVE ONLY TO CABLES LISTED BELOW.

LOOK FOR EQUIVALENT AWG SIZE FOR mm2
AND ADD THIS TO CABLE MARKINGS.

FOR EXAMPLE:
CABLE SIZE IS 25mm2 --> MARKING AWG3.

EQUIVALENCY:

mm2		AWG
10 mm2	=	AWG8
16 mm2	=	AWG6
25 mm2	=	AWG3
35 mm2	=	AWG2

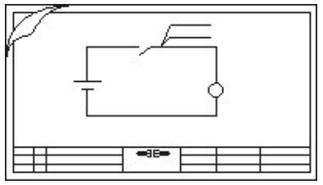

DOCUMENTS INCLUDED:

29604 BATTERY BOX
ANCH WINCH CABLE SET

NOTICE! CABLES WITH STICKER

FOR EXAMPLE

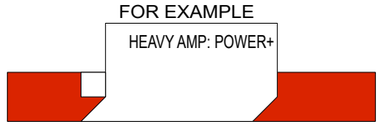

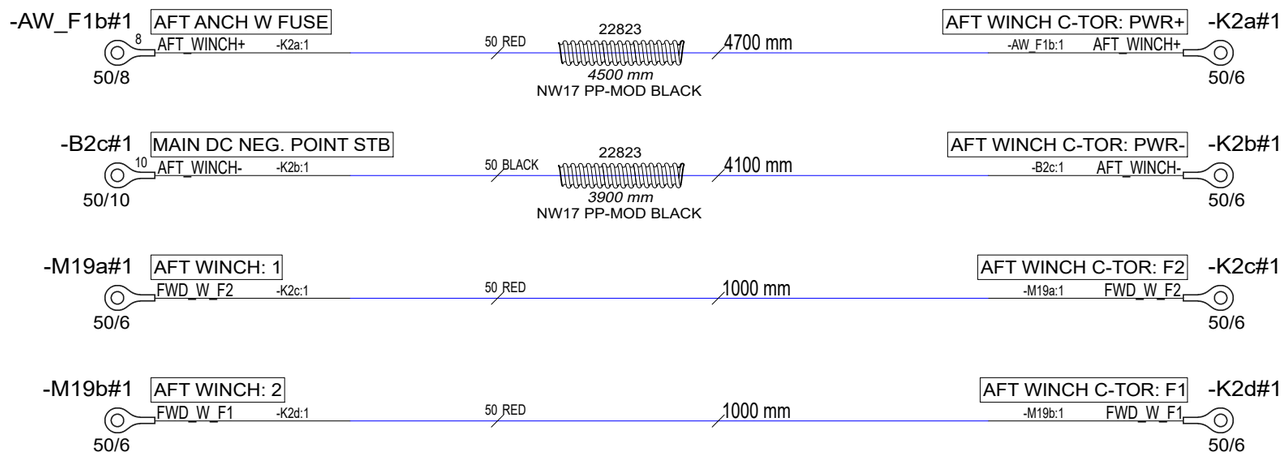

Date of modification	Modified by	Description
19.4.2024	PF	G4: 2005054; Not modified
17.2.2023	RK	F3: NOT MODIFIED.
17.10.2023	PF	F4: 2004916; Cable sizes increased

Date	22.5.2019
Drawing by	TuM
Sheet rev.	4
Project rev.	G

NAVIX designed solutions
Copyright by

Axopar Boat	Sub-product code	29604 Product code	Project ID
37 MY20 Boat model	AFT WINCH CABLE SET Title	HL Loc	138 / 210 Sheet

NOTICE!
BATTERY CABLES NEED TO ADD MARKINGS
SHOWN IN EXAMPLE BELOW.

EXEMPTION:
ALL BLACK WIRES
THIS MARKING IS NOT NEEDED.

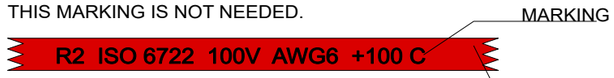

EXAMPLE: RED 16mm2 WIRE MARKINGS.

MARKING SHOWN ABOVE ONLY TO CABLES LISTED BELOW.

LOOK FOR EQUIVALENT AWG SIZE FOR mm2
AND ADD THIS TO CABLE MARKINGS.

FOR EXAMPLE:
CABLE SIZE IS 25mm2 --> MARKING AWG3.

EQUIVALENCY:

mm2		AWG
10 mm2	=	AWG8
16 mm2	=	AWG6
25 mm2	=	AWG3
35 mm2	=	AWG2

NOTICE! CABLES WITH STICKER

FOR EXAMPLE

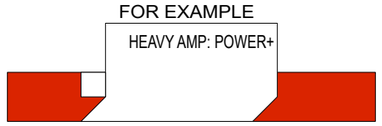

LABEL
HEAVY AMPLIFIER CABLES
(TO TOP OF PACKAGE)

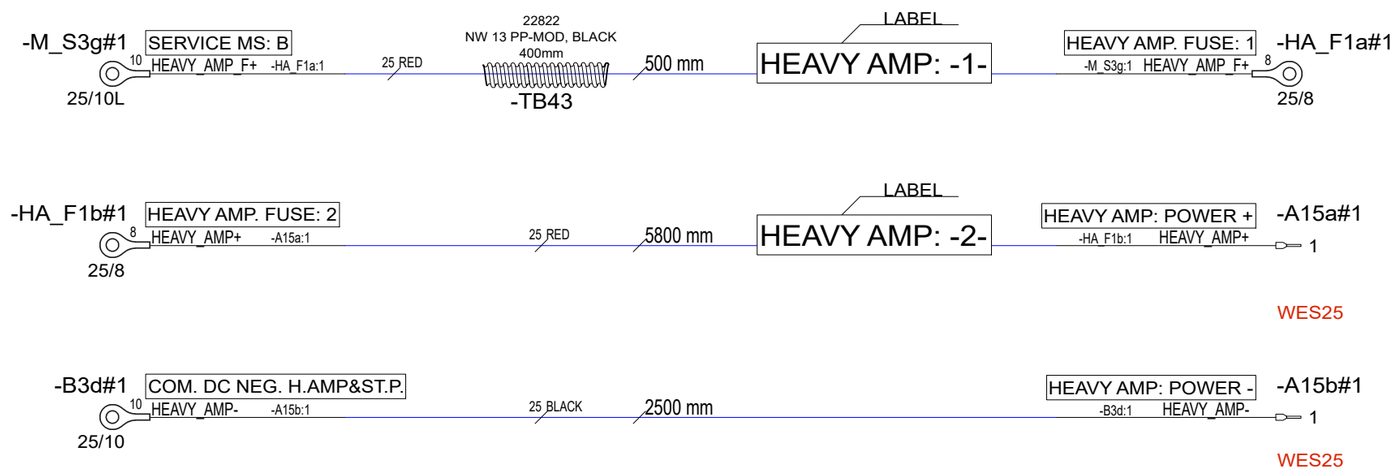

PACKED TO OWN PACKAGE.

22.9.2021	VV	E4: NOT MODIFIED / REVISION RETURNED TO REV. E.	Date 21.5.2019	NAVIX designed solutions	Axopar		29605	
17.2.2023	RK	F5: LENGTH MODIFICATIONS.	Drawing by TuM		Boat	Sub-product code	Product code	Project ID
19.4.2024	PF	G5: 2005054; Not modified	Sheet rev. 5		37 MY20	HEAVY AMPLIFIER CABLES	HL	139 / 210
Date of modification	Modified by	Description	Project rev. G	Copyright by	Boat model	Title	Loc	Sheet

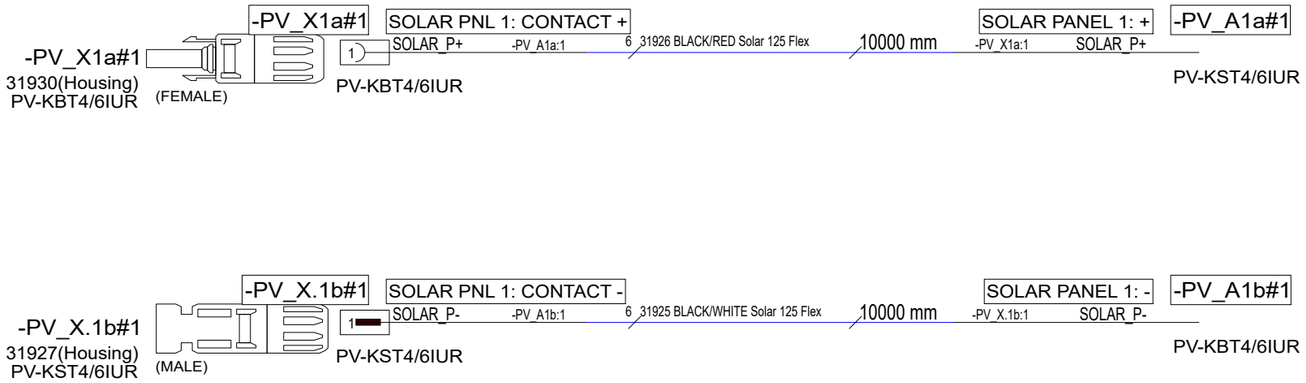

DELIVERED SEPARATELY

SOLAR CABLE CONNECTORS

31927 Solar Connector MC4 Pin inc. housing

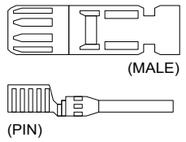

31930 Solar Connector MC4 Socket inc. housing

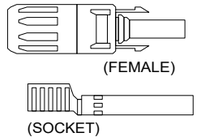

SOLAR PANEL CONNECTORS

31930 Solar Connector MC4 Socket inc. housing

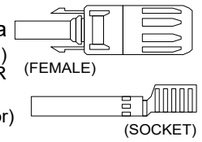

31927 Solar Connector MC4 Pin inc. housing

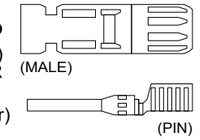

LABEL

SOLAR PANEL CABLES

(TO TOP OF PACKAGE)

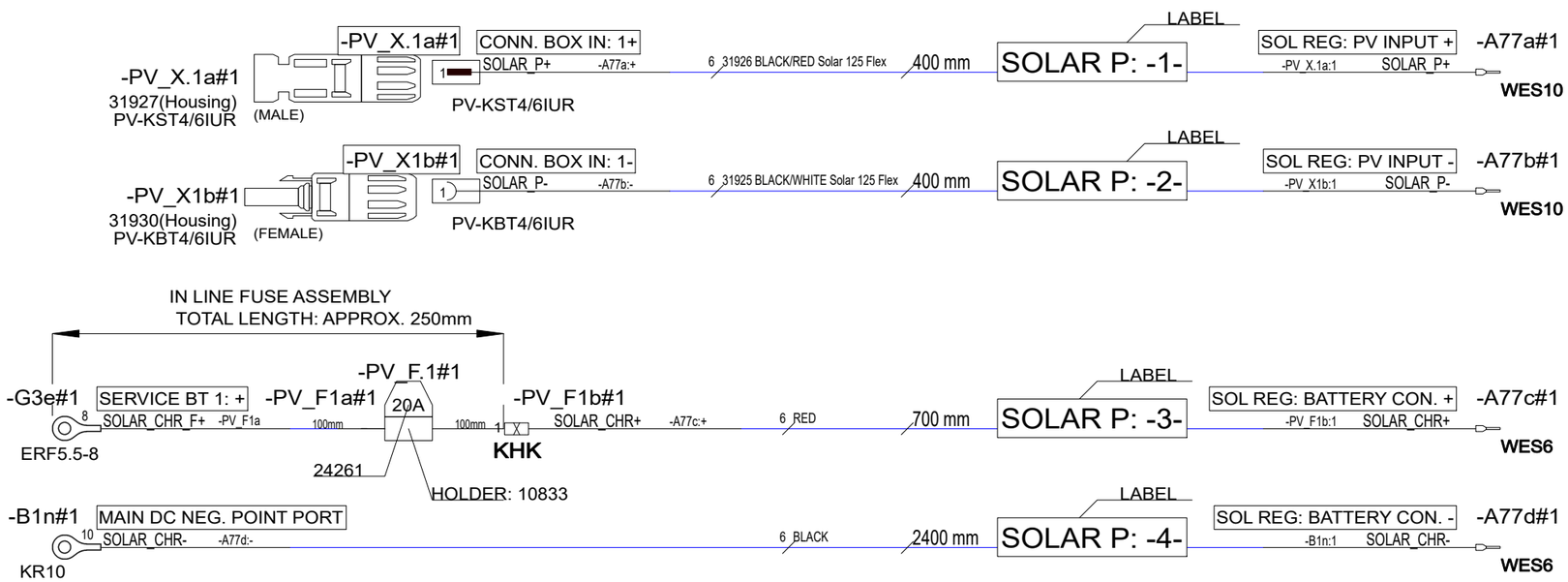

PACKED TO OWN PACKAGE.

NOTICE! CABLES WITH STICKER

FOR EXAMPLE

POINT -A-

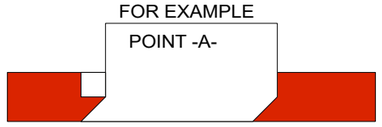

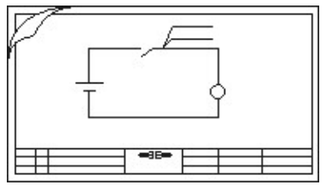

DOCUMENTS INCLUDED:

29606 BATTERY BOX
SOLAR PANEL CABLES

30.7.2024	PF	G5: 2005139; G3e terminal changed	Date	21.5.2019	NAVIX designed solutions	Axopar		29606	
17.2.2023	RK	F4: NOT MODIFIED.	Drawing by	TuM		Boat	Sub-product code	Product code	Project ID
19.4.2024	PF	G4: 2005054; Not modified	Sheet rev.	5		37 MY20	SOLAR PANEL CABLES	HL	140 / 210
Date of modification	Modified by	Description	Project rev.	G	Copyright by	Boat model	Title	Loc	Sheet

NOTICE! CABLES WITH STICKER

FOR EXAMPLE

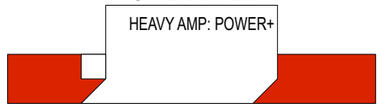

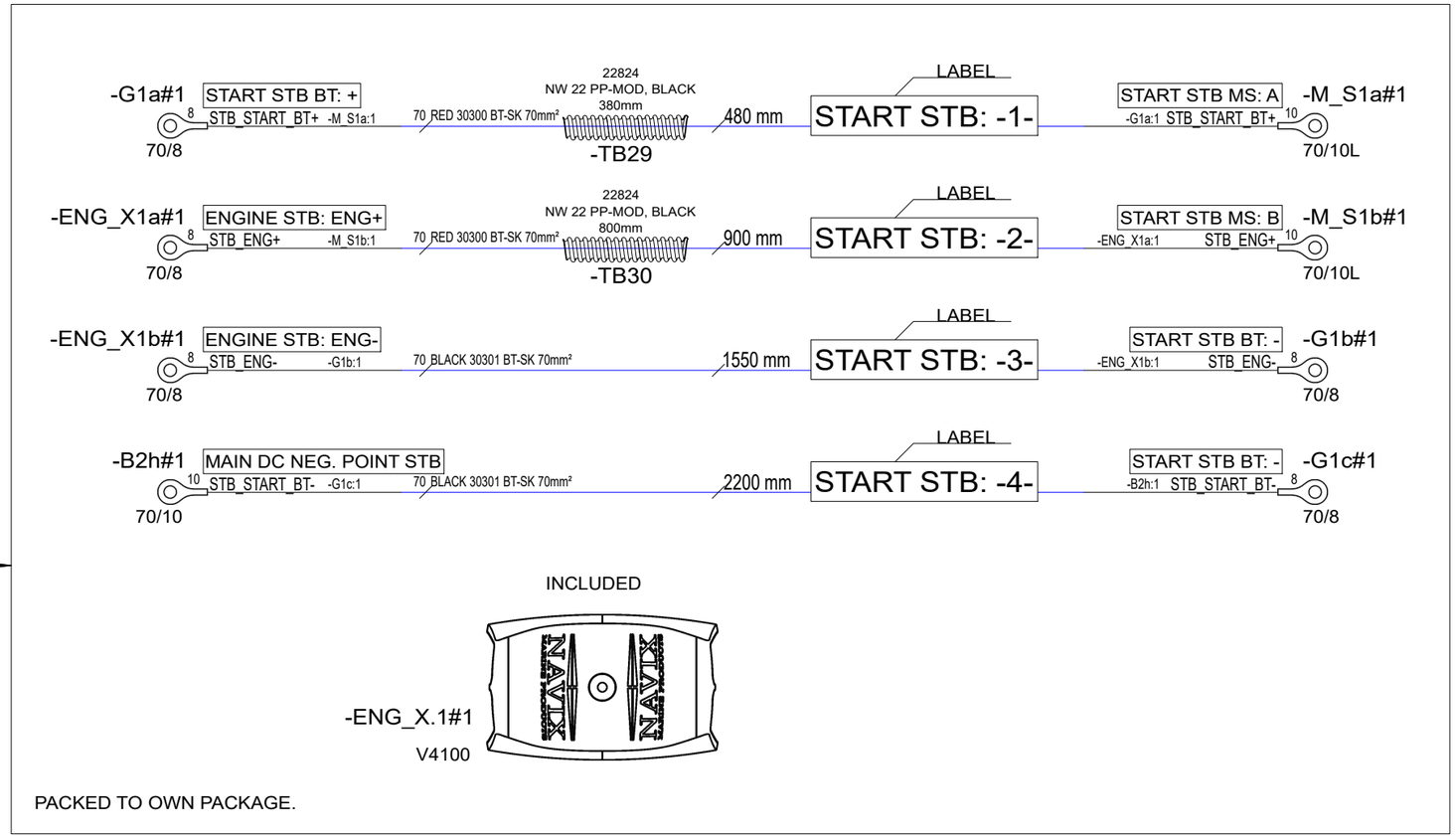

PACKED TO OWN PACKAGE.

LABEL

START STB CABLES

(TO TOP OF PACKAGE)

NOTICE!
BATTERY CABLES NEED TO ADD MARKINGS
SHOWN IN EXAMPLE BELOW.

EXEMPTION:
ALL BLACK WIRES
THIS MARKING IS NOT NEEDED.

MARKING

BT-SK 750V AWG2 +100 C

CABLE

EXAMPLE: RED 50mm2 WIRE MARKINGS.

MARKING SHOWN ABOVE ONLY TO CABLES LISTED BELOW.

LOOK FOR EQUIVALENT AWG SIZE FOR mm2
AND ADD THIS TO CABLE MARKINGS.

FOR EXAMPLE:
CABLE SIZE IS 70mm2 --> MARKING AWG2/0.

EQUIVALENCY:

mm2		AWG
25 mm2	=	AWG3
35 mm2	=	AWG2
50 mm2	=	AWG0
70 mm2	=	AWG2/0
95 mm2	=	AWG3/0
120 mm2	=	250 kcmil

Date of modification	Modified by	Description
19.4.2024	PF	G5: 2005054; Not modified
30.7.2024	PF	G6: 2005139; Cable lugs changed
17.2.2023	RK	F5: NOT MODIFIED.

Date	6.7.2019
Drawing by	TuM
Sheet rev.	6
Project rev.	G

NAVIX designed solutions

Boat	Sub-product code	Product code	Project ID
Axopar		29607	

Boat model	Title	Loc	Sheet
37 MY20	BATTERY BOX CABLES STANDARD	HL	141/ 210

NOTICE! CABLES WITH STICKER

FOR EXAMPLE

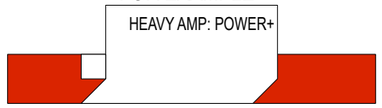

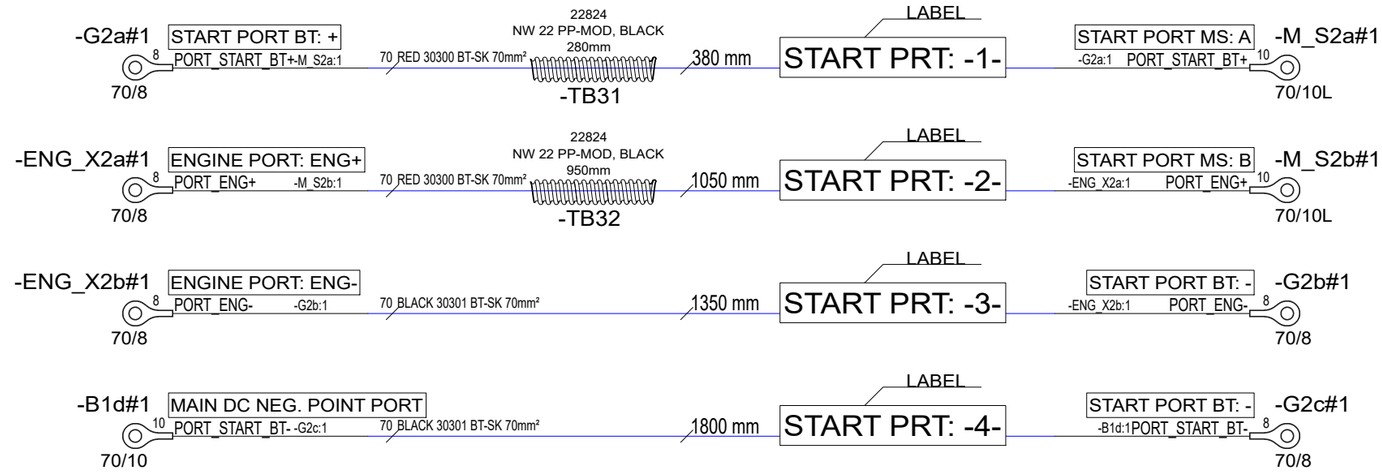

LABEL

START PRT CABLES

(TO TOP OF PACKAGE)

INCLUDED

-ENG_X.2#1

V4100

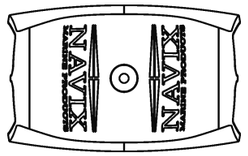

PACKED TO OWN PACKAGE.

NOTICE!
BATTERY CABLES NEED TO ADD MARKINGS
SHOWN IN EXAMPLE BELOW.

EXEMPTION:
ALL BLACK WIRES
THIS MARKING IS NOT NEEDED.

MARKING

BT-SK 750V AWG2 +100 C

CABLE

EXAMPLE: RED 50mm2 WIRE MARKINGS.

MARKING SHOWN ABOVE ONLY TO CABLES LISTED BELOW.

LOOK FOR EQUIVALENT AWG SIZE FOR mm2
AND ADD THIS TO CABLE MARKINGS.

FOR EXAMPLE:
CABLE SIZE IS 70mm2 --> MARKING AWG2/0.

EQUIVALENCY:

mm2		AWG
25 mm2	=	AWG3
35 mm2	=	AWG2
50 mm2	=	AWG0
70 mm2	=	AWG2/0
95 mm2	=	AWG3/0
120 mm2	=	250 kcmil

Date of modification	Modified by	Description
19.4.2024	PF	G5: 2005054; Not modified
30.7.2024	PF	G6: 2005139; Cable lugs changed
17.2.2023	RK	F5: NOT MODIFIED.

Date	5.7.2019
Drawing by	TuM
Sheet rev.	6
Project rev.	G

NAVIX designed solutions

Copyright by

Axopar		29607	
Boat	Sub-product code	Product code	Project ID
37 MY20	BATTERY BOX CABLES STANDARD	HL	142 / 210
Boat model	Title	Loc	Sheet

NOTICE! CABLES WITH STICKER

FOR EXAMPLE

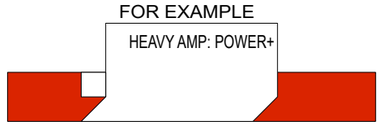

LABEL

POWER STEER CABLES

(TO TOP OF PACKAGE)

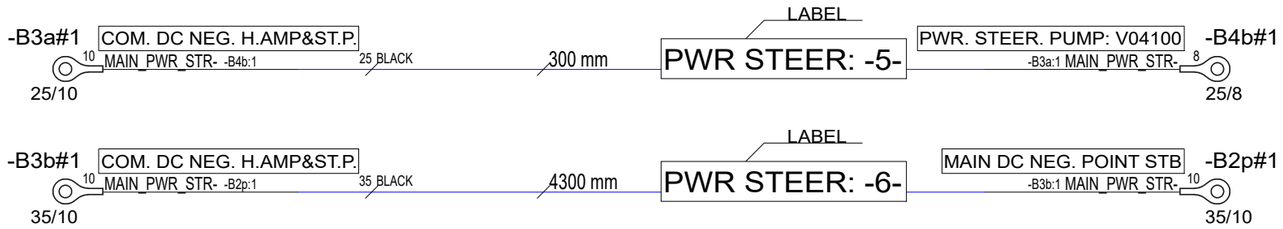

INCLUDED

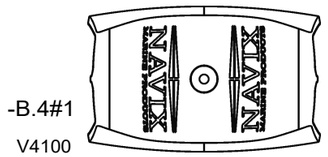

-B.4#1

V4100

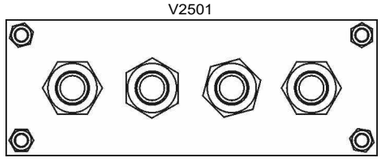

-B.3 LABEL

COM. DC NEG. H.AMP&ST.P

PACKED TO OWN PACKAGE.

NOTICE!
BATTERY CABLES NEED TO ADD MARKINGS
SHOWN IN EXAMPLE BELOW.

EXEMPTION:
ALL BLACK WIRES
THIS MARKING IS NOT NEEDED.

MARKING

R2 ISO 6722 100V AWG6 +100 C

EXAMPLE: RED 16mm2 WIRE MARKINGS.

CABLE

MARKING SHOWN ABOVE ONLY TO CABLES LISTED BELOW.

LOOK FOR EQUIVALENT AWG SIZE FOR mm2
AND ADD THIS TO CABLE MARKINGS.

FOR EXAMPLE:
CABLE SIZE IS 25mm2 --> MARKING AWG3.

EQUIVALENCY:

mm2		AWG
10 mm2	=	AWG8
16 mm2	=	AWG6
25 mm2	=	AWG3
35 mm2	=	AWG2

Date of modification	Modified by	Description
19.4.2024	PF	G5: 2005054; Not modified
30.7.2024	PF	G6: 2005139; Cable lugs changed
17.2.2023	RK	F5: NOT MODIFIED.

Date	5.7.2019
Drawing by	TuM
Sheet rev.	6
Project rev.	G

NAVIX designed solutions
Copyright by

Boat	Sub-product code	Product code	Project ID
Axopar		29607	

Boat model	Title	Loc	Sheet
37 MY20	BATTERY BOX CABLES STANDARD	HL	143 / 210

NOTICE! CABLES WITH STICKER

FOR EXAMPLE

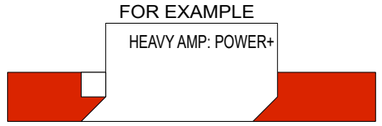

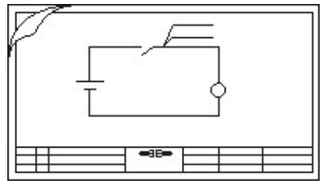

DOCUMENTS INCLUDED:

29611 BATTERY BOX
INVERTER CABLE SET

LABEL

INVERTER CABLES

(TO TOP OF PACKAGE)

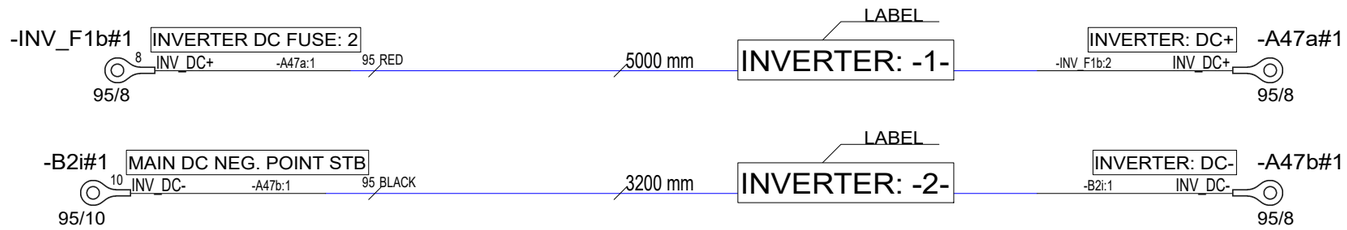

PACKED TO OWN PACKAGE.

NOTICE!
BATTERY CABLES NEED TO ADD MARKINGS
SHOWN IN EXAMPLE BELOW.

EXEMPTION:
ALL BLACK WIRES
THIS MARKING IS NOT NEEDED.

MARKING

R2 ISO 6722 100V AWG6 +100 C

CABLE

EXAMPLE: RED 16mm2 WIRE MARKINGS.

MARKING SHOWN ABOVE ONLY TO CABLES LISTED BELOW.

LOOK FOR EQUIVALENT AWG SIZE FOR mm2
AND ADD THIS TO CABLE MARKINGS.

FOR EXAMPLE:
CABLE SIZE IS 25mm2 --> MARKING AWG3.

EQUIVALENCY:

mm2		AWG
10 mm2	=	AWG8
16 mm2	=	AWG6
25 mm2	=	AWG3
35 mm2	=	AWG2

Date of modification	Modified by	Description
19.4.2024	PF	G3: 2005054; Not modified
24.6.2024	PF	G4: 2005139; Cables 25mm2->95mm2, lengths changed
17.2.2023	RK	F3: NOT MODIFIED.

Date	6.7.2019
Drawing by	TuM
Sheet rev.	4
Project rev.	G

NAVIX designed solutions
Copyright by

Axopar Boat		29611 Product code	Project ID
37 MY20 Boat model	BATTERY BOX INVERTER CABLE SET Title	HL Loc	144 / 210 Sheet

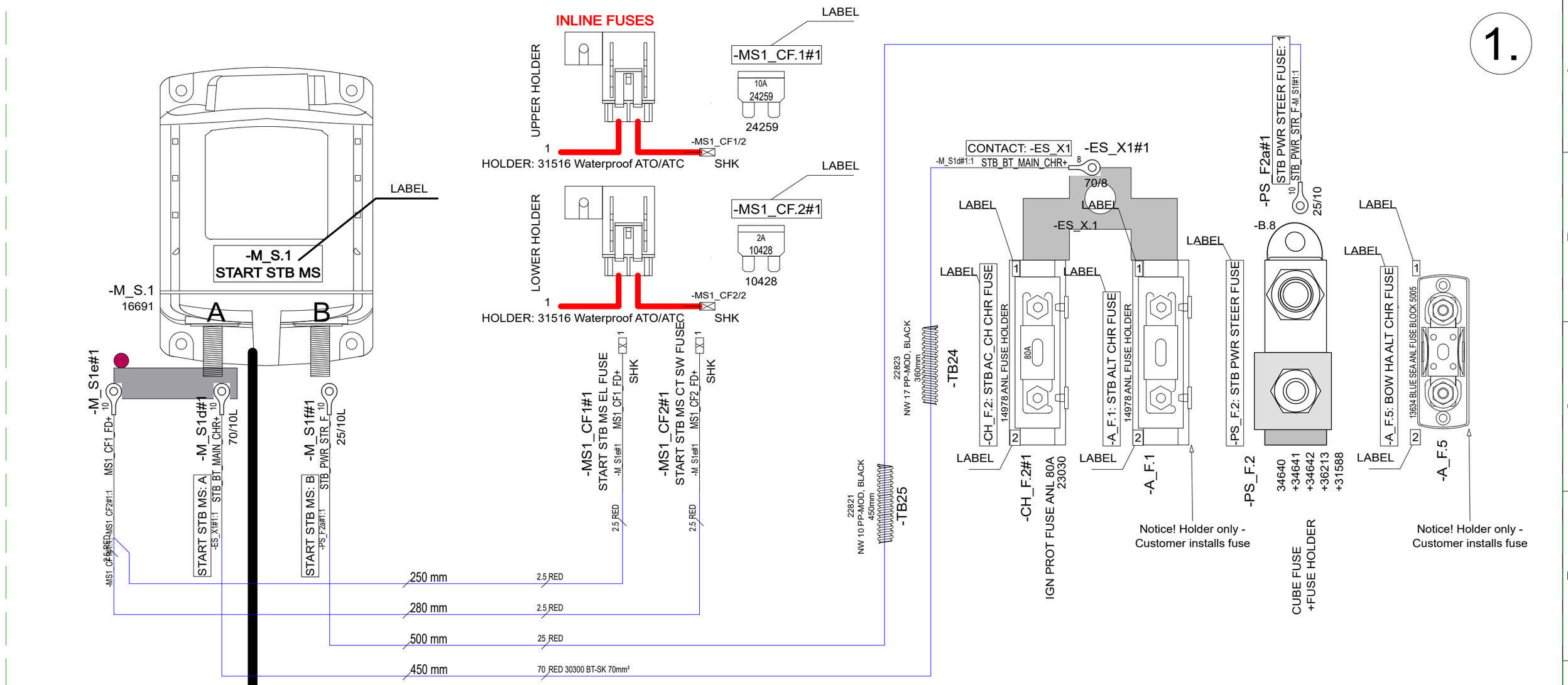

ADD: M10 X 30mm BOLT
M10 WASHER
M10 SPRING WASHER
M10 NUT

LABEL INSTRUCTIONS

NOTICE! PUT LABELS TO FUSE HOLDER BASE - NOT TO COVER.

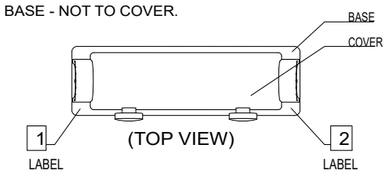

CONNECTION
TO BATTERY BOX HARNESS

BLACK	-M_S1c	INPUT-	1
RED	-M_S1c	MS_EL_FD_ST_SB+	2
BROWN	-M_S1c	SB_E_MS_C_BRN	3
YELLOW	-M_S1c	SB_E_MS_C_YEL	4
			5
ORANGE	-M_S1c	SB_E_MS_C_ORG	6

DTM06-6S

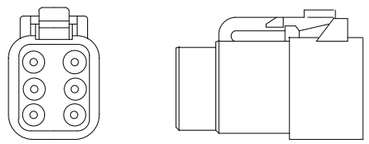

INCLUDED TO THE MAIN SWITCH

NOTICE!
INSTALL CABLES TO DEVICE SO THAT LARGEST TERMINALS ARE CLOSEST TO DEVICES CONDUCTIVE AREA.

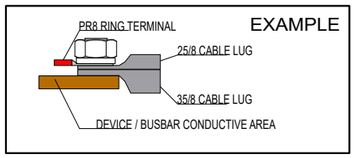

Date of modification	Modified by	Description
19.4.2024	PF	G11: 2005054; Not modified
24.6.2024	PF	G12: 2005139; Inverter cable ->95mm2 and fuse ->300A
13.10.2023	PF	F11:2004855; A_F.5 holder, A_F.5 ->39903, cable sizes, AW_F.1->125A

Date	2.7.2019
Drawing by	TuM
Sheet rev.	12
Project rev.	G

NAVIX designed solutions
Copyright by

Axopar	SEE EXP VIEW	29613	
Boat	Sub-product code	Product code	Project ID
37 MY20	BATTERY BOX STB PANEL 1	HL	145 / 210
Boat model	Title	Loc	Sheet

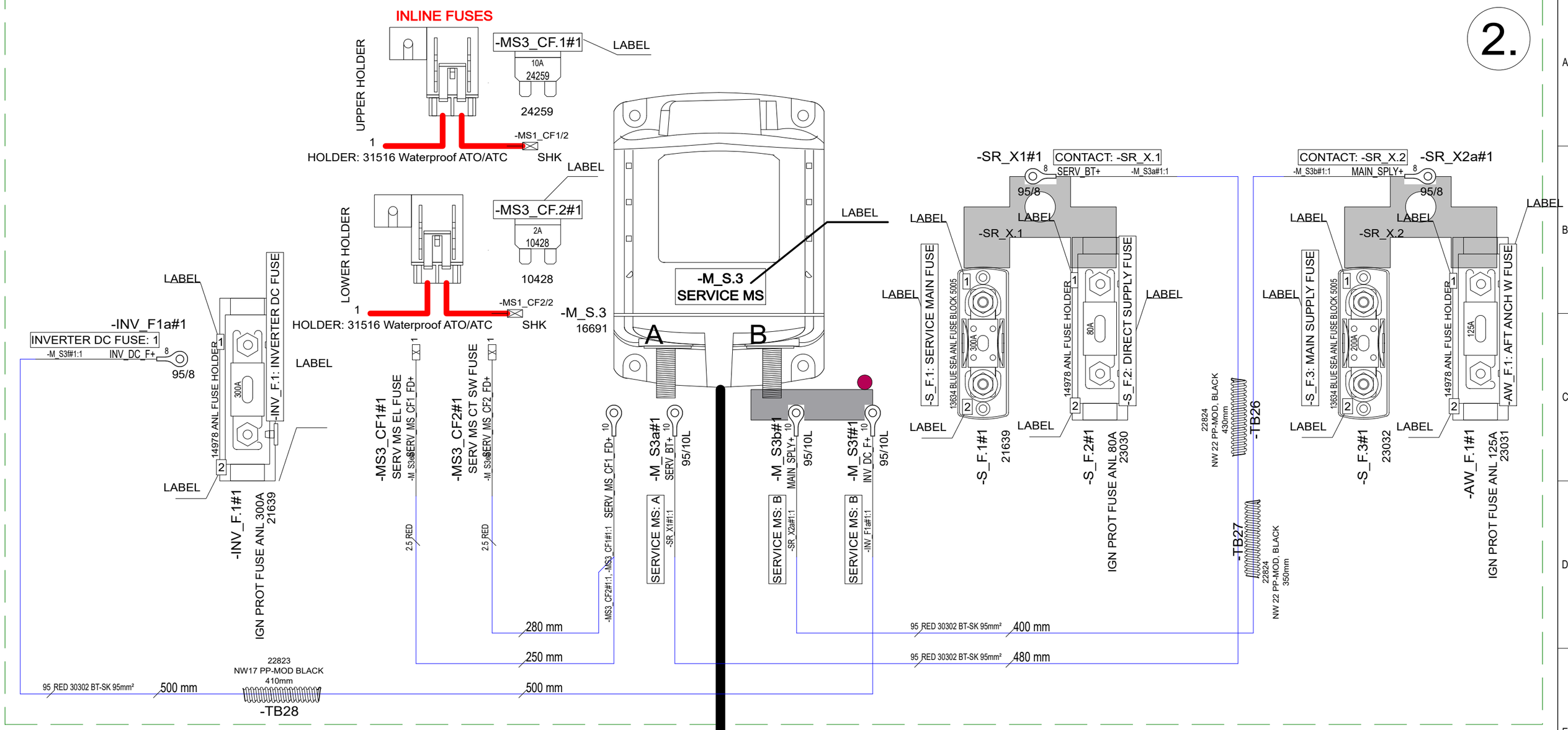

CONNECTION
TO BATTERY BOX HARNESS

BLACK	-M_S3c	INPUT-	1
RED	-M_S.3	SERV_MS_C_RED	2
BROWN	-M_S3c	SERV_MS_C_BRN	3
YELLOW	-M_S3c	SERV_MS_C_YEL	4
			5
ORANGE	-M_S3c	SERV_MS_C_ORG	6

DTM06-6S

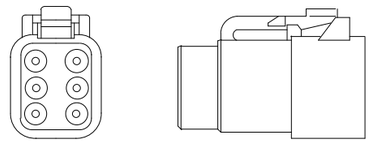

INCLUDED TO THE MAIN SWITCH

NOTICE!
INSTALL CABLES TO DEVICE SO THAT LARGEST TERMINALS ARE CLOSEST TO DEVICES CONDUCTIVE AREA.

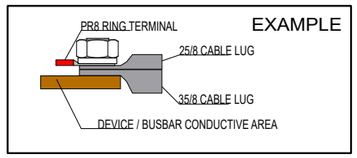

LABEL INSTRUCTIONS

NOTICE! PUT LABELS TO FUSE HOLDER BASE - NOT TO COVER.

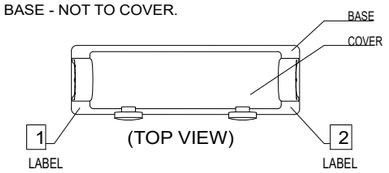

ADD: M10 X 30mm BOLT
M10 WASHER
M10 SPRING WASHER
M10 NUT

19.4.2024	PF	G11: 2005054; Not modified	Date	3.7.2019	NAVIX designed solutions	Axopar	SEE EXP VIEW	29613
24.6.2024	PF	G12: 2005139; Inverter cable ->95mm2 and fuse ->300A	Drawing by	TuM		Boat	Sub-product code	Product code / Project ID
13.10.2023	PF	F11:2004855; A_F.5 holder, A_F.5 ->39903, cable sizes, AW_F.1->125A	Sheet rev.	12		37 MY20	BATTERY BOX STB PANEL 1	HL
Date of modification	Modified by	Description	Project rev.	G	Copyright by	Boat model	Title	Loc / 146 / 210 Sheet

GENERAL LAYOUT/ LABELS / CABLE ROUTING

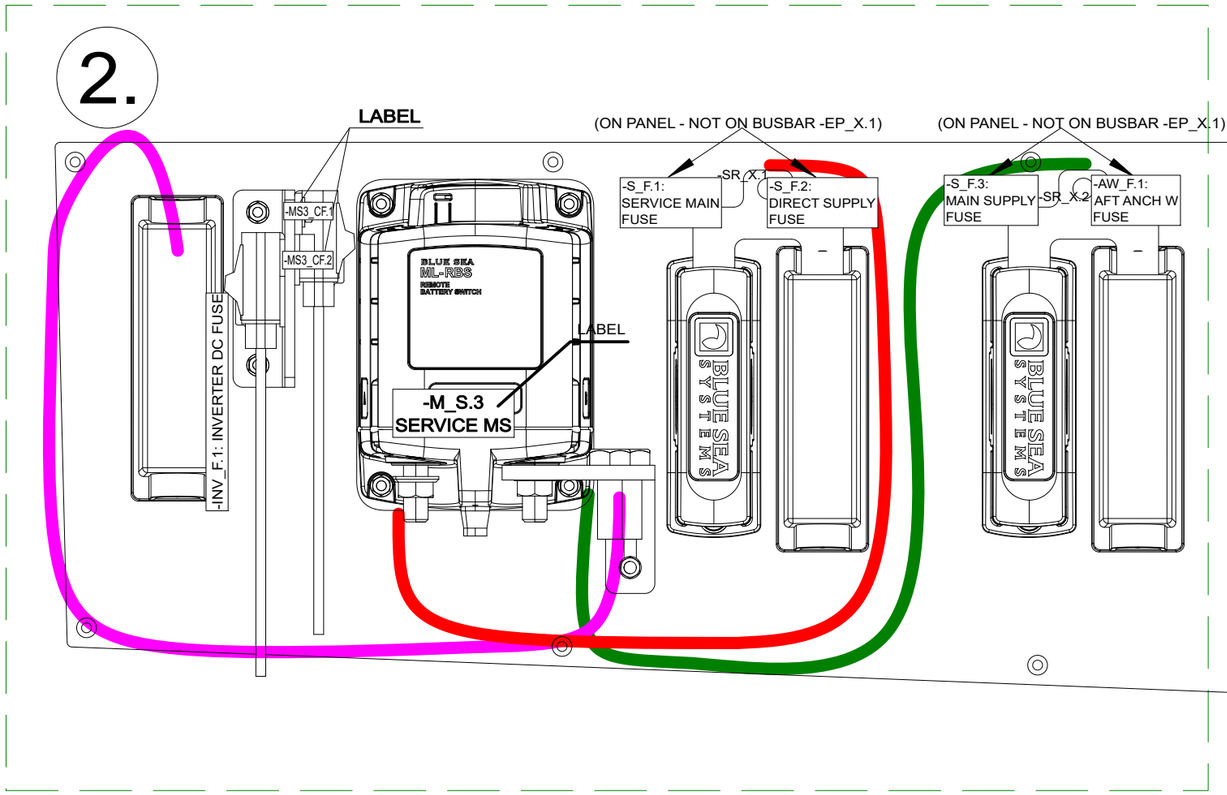

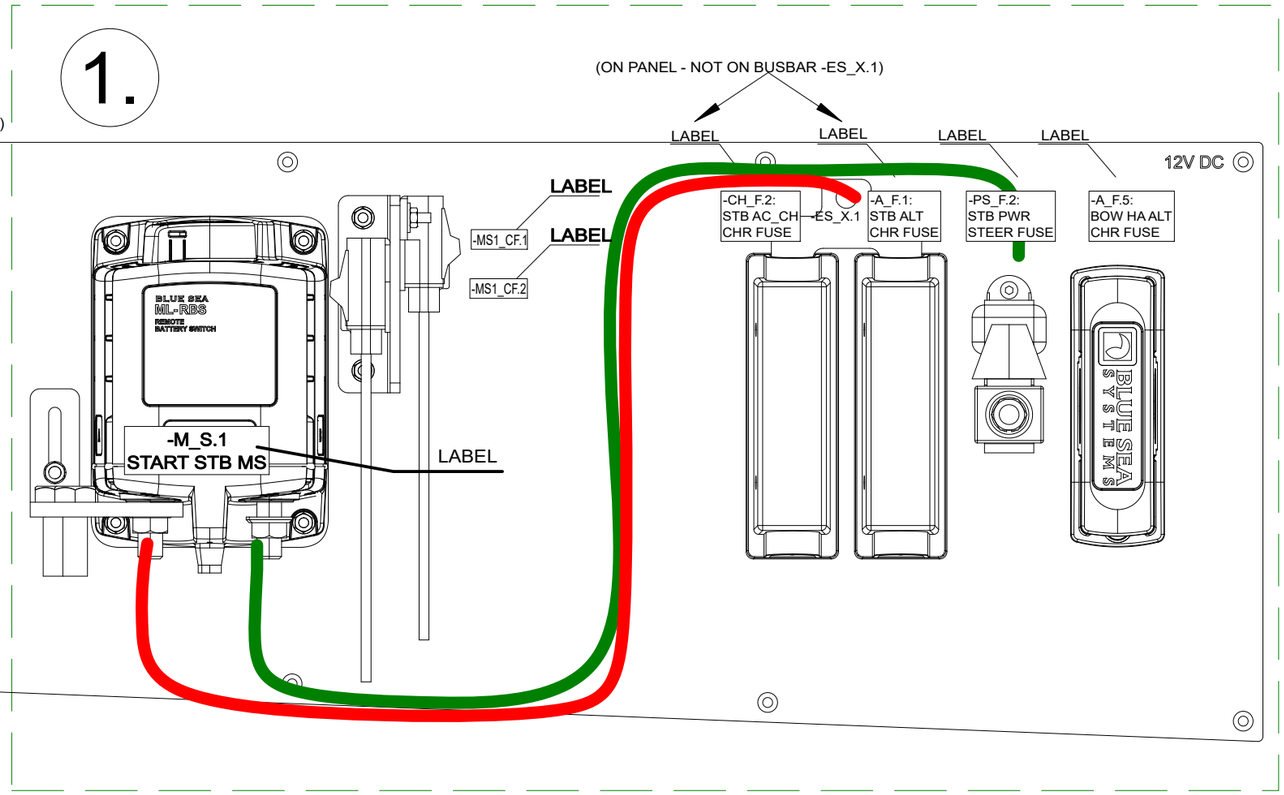

NOTICE!
BATTERY CABLES NEED TO ADD MARKINGS
SHOWN IN EXAMPLE BELOW.

EXEMPTION:
ALL BLACK WIRES
THIS MARKING IS NOT NEEDED.

MARKING

BT-SK 750V AWG2 +100 C

CABLE

EXAMPLE: RED 50mm2 WIRE MARKINGS.

MARKING SHOWN ABOVE ONLY TO CABLES LISTED BELOW.

LOOK FOR EQUIVALENT AWG SIZE FOR mm2
AND ADD THIS TO CABLE MARKINGS.

FOR EXAMPLE:
CABLE SIZE IS 70mm2 --> MARKING AWG2/0.

EQUIVALENCY:

mm2		AWG
25 mm2	=	AWG3
35 mm2	=	AWG2
50 mm2	=	AWG0
70 mm2	=	AWG2/0
95 mm2	=	AWG3/0
120 mm2	=	250 kcmil

NOTICE!
VERIFY THAT ALL CABLES HAVE MARKINGS
SHOWN IN EXAMPLE BELOW.

EXEMPTION:
ALL <500mm WIRES, BLACK WIRES AND HI-FLEX CABLES
THIS MARKING IS NOT NEEDED.

MARKING

R2 ISO 6722 100V AWG16 +100 C

CABLE

EXAMPLE: RED 1,5mm2 WIRE MARKINGS.

NOTICE! CABLES WITH STICKER

FOR EXAMPLE

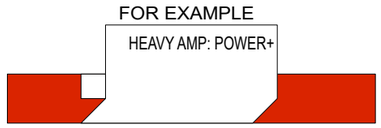

19.4.2024	PF	G11: 2005054; Not modified	Date	3.7.2019	NAVIX designed solutions	Axopar	SEE EXP VIEW	29613	
24.6.2024	PF	G12: 2005139; Inverter cable ->95mm2 and fuse ->300A	Drawing by	TuM		Boat	Sub-product code	Product code	Project ID
13.10.2023	PF	F11:2004855; A_F.5 holder, A_F.5 ->39903, cable sizes, AW_F.1->125A	Sheet rev.	12		37 MY20	BATTERY BOX STB PANEL 1	HL	147 / 210
Date of modification	Modified by	Description	Project rev.	G	Copyright by	Boat model	Title	Loc	Sheet

EXP VIEW

29613_AXOPAR_37_MY20_BATTERY_BOX_STB_PANEL_1

BRACKET FOR 31516 FUSEHOLDER

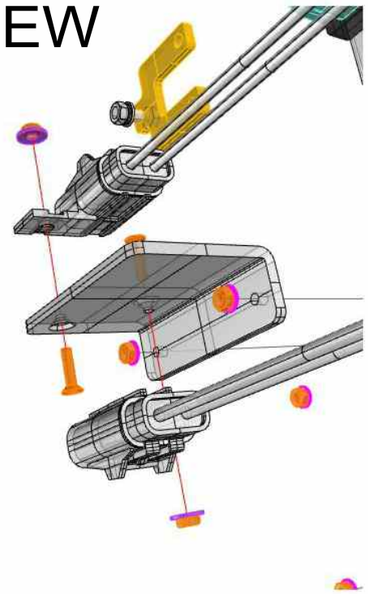

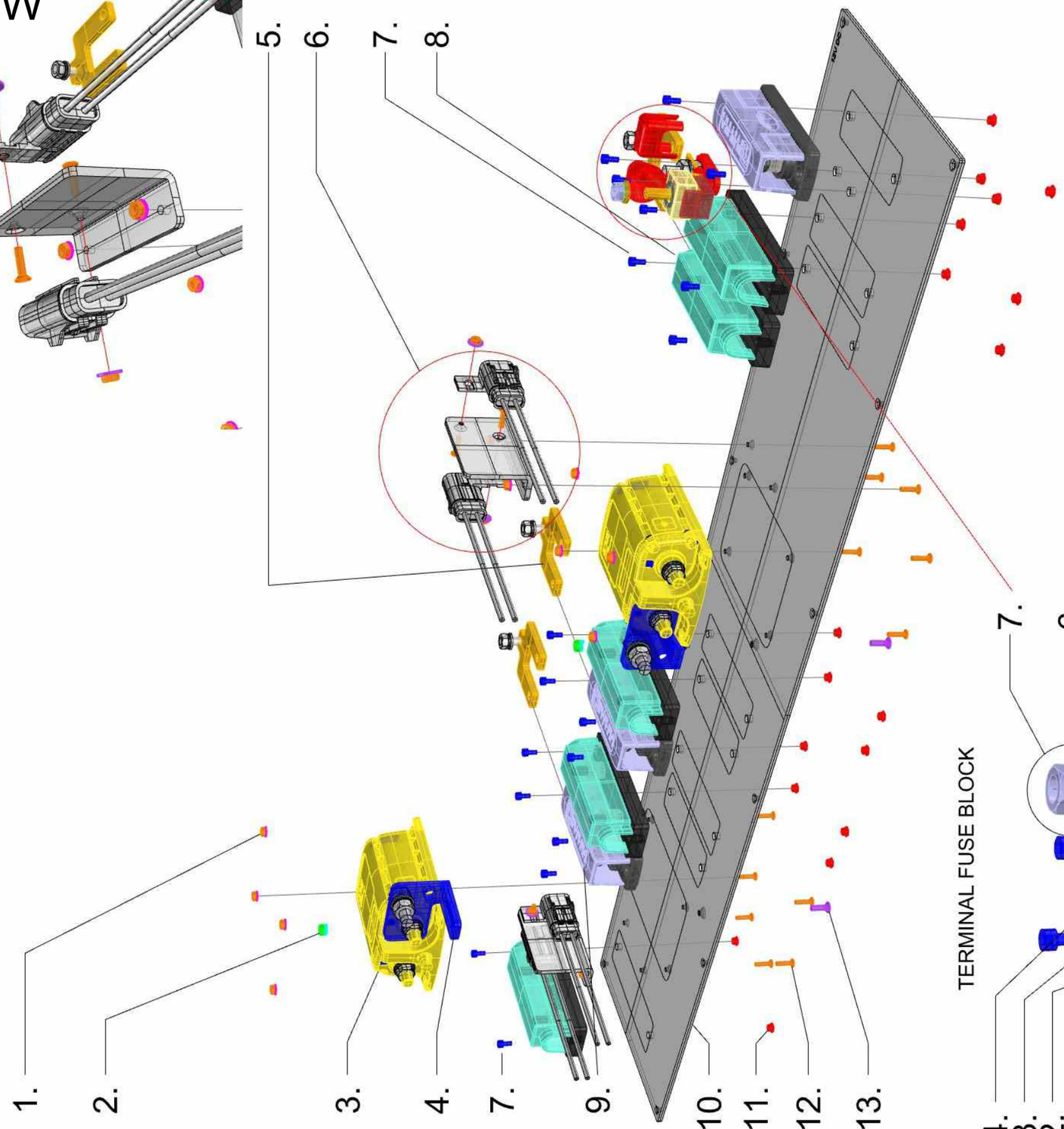

29613_AXOPAR_37_MY20_BATTERY_BOX_STB_PANEL_1

1. 8 PCS VMI30905 HEX NUT M4 DIN934
   8 PCS VMI30904 SPRING LOCK WASHER M4 DIN127
2. 2 PCS VMI31538 HEX NUT M5 DIN934
   2 PCS VMI31540 SPRING LOCK WASHER M5 DIN127
3. 2 PCS 16691 BATTERY SWITCH ML-RBS REMOTE
4. 2 PCS 30141_VIRTAKISKO_L_BLUE_SEA_ML_THREE_SPOT_LONG
   2 PCS VMI32024 HEX BOLT FULL THREAD M10X30 DIN933
   2 PCS VMI32009 FLAT WASHER FOR HEX BOLTS AND NUTS M10 DIN125A
   2 PCS VMI32008 SPRING LOCK WASHER M10 DIN127
   2 PCS VMI32010 HEX NUT M10 DIN934
5. 3 PCS 30142_ANL_CONNECTION_BAR_DOUBLE
   3 PCS VMI32018 HEX BOLT FULL THREAD M8X25 DIN933
   3 PCS VMI32013 FLAT WASHER FOR HEX BOLTS AND NUTS M8 DIN125A
   3 PCS VMI32011 SPRING LOCK WASHER M8 DIN127
   3 PCS VMI32012 HEX NUT M8 DIN934
6. 4 PCS 31516_Fuseholder waterproof ATO ATC 5065B-BSS (as in diagram)
   2 PC 38604_NAVIX_LINE_BRACKET_FOR_31516_FUSEHOLDER_(WOC)
   8 PC VMI30906 Flat Washer for HEX bolts and nuts M4 DIN125A
   8 PC VMI30905 HEX NUT M4 DIN934
   4 PC VMI30917 COUNTERSUNK HEAD SCREW HEX SOCKET M4X16 DIN7991
7. 16 PCS VMI30942 HEX SOCKET HEAD CAP SCREW M4X8 DIN912
8. 5 PCS 14978_ANL_FUSE_HOLDER
9. 3 PCS 13634 Blue Sea ANL FUSE BLOCK 5005 35A to 300A (as in diagram)
10. 1 PC 29896_AXOPAR_37_MY20_BATTERY_BOX_STB_PANEL_1_(WOC)_V7
11. 18 PCS 9872 PURISTEVÄLIHOLKKI ETSOS M4X4
12. 12 PCS VMI30917 COUNTERSUNK HEAD SCREW HEX SOCKET M4X16 DIN7991
13. 2 PCS VMI31796 COUNTERSUNK HEAD SCREW HEX SOCKET M5X16 DIN7991

TERMINAL FUSE BLOCK

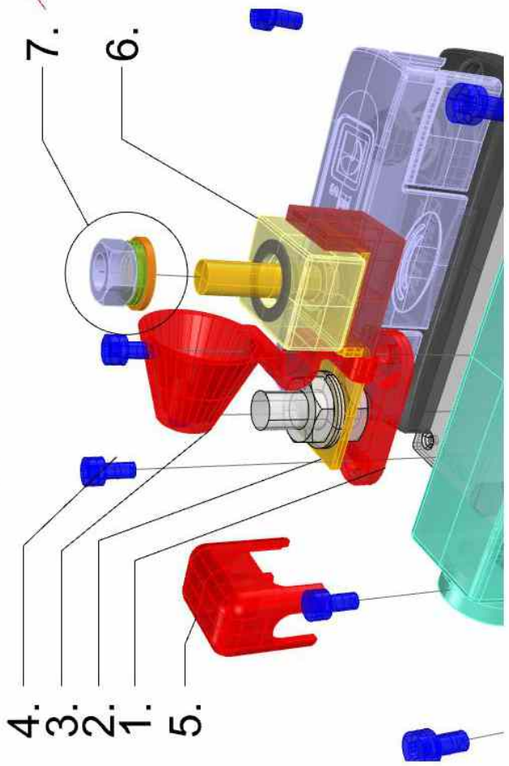

TERMINAL FUSE BLOCK - as in diagram
1. 1pc 36213 POWER DISTRIBUTION STUD IS-10mm-1R
2. 1pc 34642 CFBAR1-250SP SINGLE STUD
3. 1pc 34641 -B.6 CFCOVER-1R SINGLE STUD/RED
4. 2pcs VMI30942 HEX SOCKET HEAD CAP SCREW M4X8 DIN912
5. 1pc 31588 INSULATED COVER POSITIVE RED ISC-10R
6. 1pc 34640 -PS_F.6 CUBE FUSE MRFB-080 80A
7. 1pc VMI36860 HEX NUT 1/4" "UNC A4
   1pc VMI31830 SPRING LOCK WASHER M6 DIN127
   1pc VMI31831 FLAT WASHER FOR HEX BOLTS AND NUTS M6 DIN125A
   1pc VMI36859 FLAT WIDE WASHER FOR HEX BOLTS AND NUTS M6

TE 28.06.-19
TE 30.09.-19
MN 23.01.-20
TE 17.04.-20
TE 02.12.-21
TE 14.03.-23
MN 27.9.2023 (Project 2004855)

Date of modification	Modified by	Description
19.4.2024	PF	G11: 2005054; Not modified
24.6.2024	PF	G12: 2005139; Inverter cable ->95mm2 and fuse ->300A
13.10.2023	PF	F11:2004855; A_F.5 holder, A_F.5 ->39903, cable sizes, AW_F.1->125A

Date	3.7.2019
Drawing by	TuM
Sheet rev.	12
Project rev.	G

NAVIX designed solutions
Copyright by

Axopar Boat	SEE EXP VIEW Sub-product code	29613 Product code	Project ID
37 MY20 Boat model	BATTERY BOX STB PANEL 1 Title	HL Loc	148 / 210 Sheet

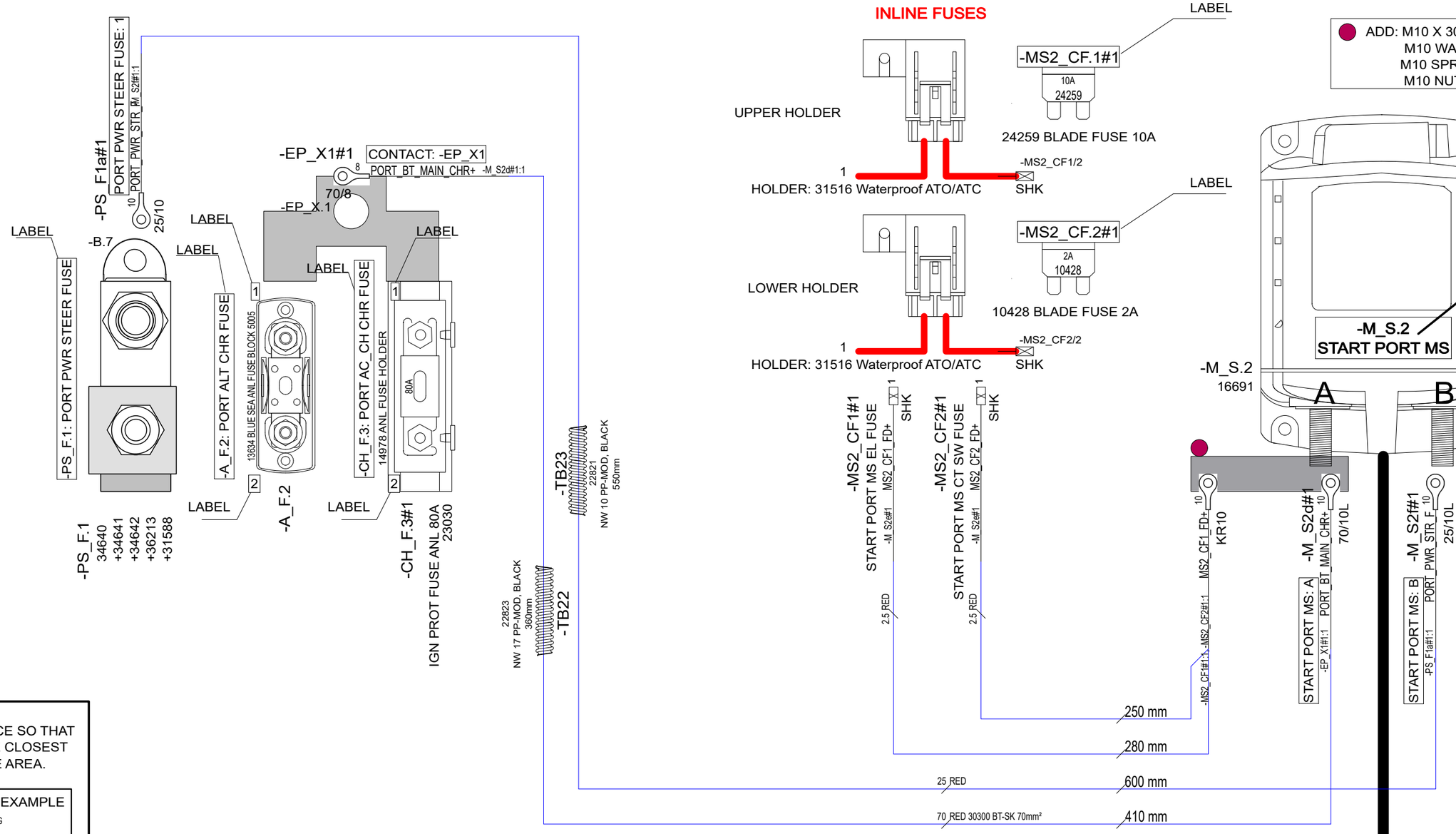

NOTICE!
INSTALL CABLES TO DEVICE SO THAT LARGEST TERMINALS ARE CLOSEST TO DEVICES CONDUCTIVE AREA.

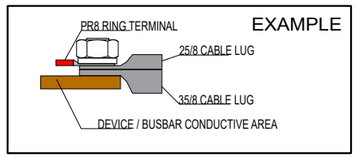

LABEL INSTRUCTIONS

NOTICE! PUT LABELS TO FUSE HOLDER BASE - NOT TO COVER.

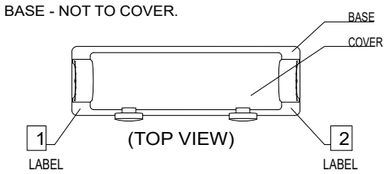

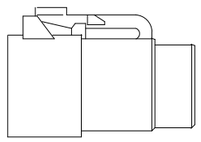

INCLUDED TO THE MAIN SWITCH

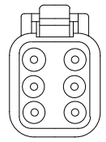

CONNECTION
TO BATTERY BOX HARNESS

1	INPUT-	-M_S2c	BLACK
2	PT_E_MS_C_RED	-M_S.2	RED
3	PT_E_MS_C_BRN	-M_S2c	BROWN
4	PT_E_MS_C_YEL	-M_S2c	YELLOW
5			
6	PT_E_MS_C_ORG	-M_S2c	ORANGE

DTM06-6S

Date of modification	Modified by	Description
17.2.2023	RK	F8: FUSE HOLDERS CHANGED TO 31516.
13.10.2023	PF	F9: 2004855; A_F.2 holder -> Bluesea, fuse moved to 39902, cable sizes
11.4.2024	PF	G10: 2005054/2005139; Bow ch fuse removed

Date	1.7.2019
Drawing by	TuM
Sheet rev.	10
Project rev.	G

NAVIX designed solutions
Copyright by

Axopar Boat	SEE EXP VIEW Sub-product code	29615 Product code	Project ID
37 MY20 Boat model	BATTERY BOX PORT PANEL 1 Title	HL Loc	149 / 210 Sheet

GENERAL LAYOUT/ LABELS/ CABLE ROUTINGS

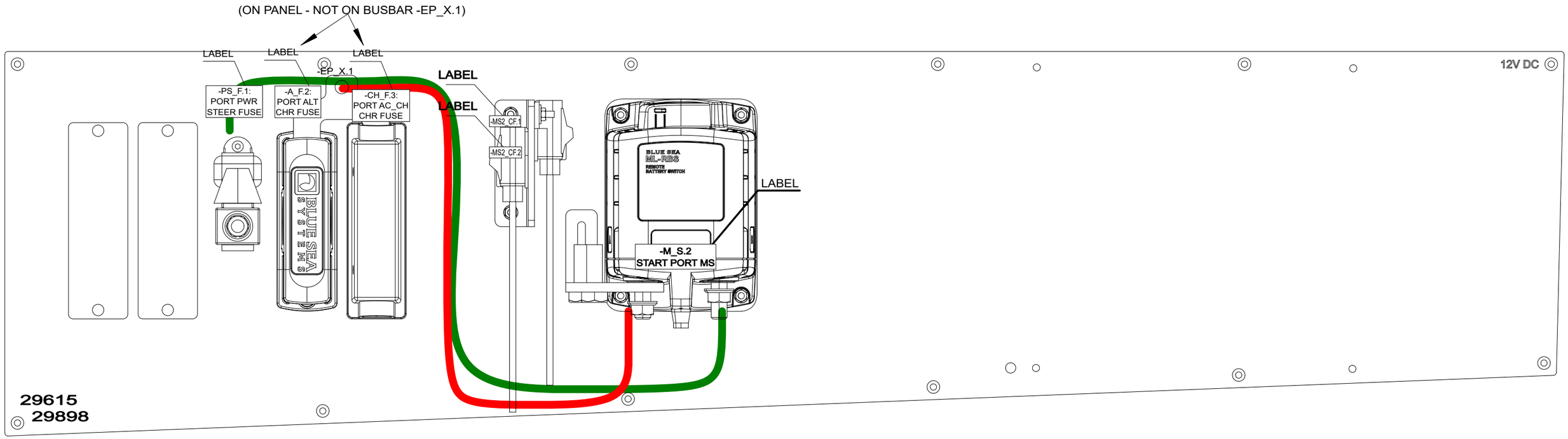

NOTICE!
BATTERY CABLES NEED TO ADD MARKINGS
SHOWN IN EXAMPLE BELOW.

EXEMPTION:
ALL BLACK WIRES
THIS MARKING IS NOT NEEDED.

MARKING

BT-SK 750V AWG2 +100 C

EXAMPLE: RED 50mm2 WIRE MARKINGS.

CABLE

MARKING SHOWN ABOVE ONLY TO CABLES LISTED BELOW.

LOOK FOR EQUIVALENT AWG SIZE FOR mm2
AND ADD THIS TO CABLE MARKINGS.

FOR EXAMPLE:
CABLE SIZE IS 70mm2 --> MARKING AWG2/0.

EQUIVALENCY:

mm2		AWG
25 mm2	=	AWG3
35 mm2	=	AWG2
50 mm2	=	AWG0
70 mm2	=	AWG2/0
95 mm2	=	AWG3/0
120 mm2	=	250 kcmil

NOTICE!
VERIFY THAT ALL CABLES HAVE MARKINGS
SHOWN IN EXAMPLE BELOW.

EXEMPTION:
ALL <500mm WIRES, BLACK WIRES AND HI-FLEX CABLES
THIS MARKING IS NOT NEEDED.

MARKING

R2 ISO 6722 100V AWG16 +100 C

EXAMPLE: RED 1,5mm2 WIRE MARKINGS.

CABLE

NOTICE! CABLES WITH STICKER

FOR EXAMPLE

HEAVY AMP: POWER+

Date of modification	Modified by	Description
17.2.2023	RK	F8: FUSE HOLDERS CHANGED TO 31516.
13.10.2023	PF	F9: 2004855; A_F.2 holder -> Bluesea, fuse moved to 39902, cable sizes
11.4.2024	PF	G10: 2005054/2005139; Bow ch fuse removed

Date	1.7.2019
Drawing by	TuM
Sheet rev.	10
Project rev.	G

NAVIX designed solutions
Copyright by

Axopar Boat	SEE EXP VIEW Sub-product code	29615 Product code	Project ID
37 MY20 Boat model	BATTERY BOX PORT PANEL 1 Title	HL Loc	150 / 210 Sheet

29615_AXOPAR_37_MY20_BATTERY_BOX_PORT_PANEL_1

EXP VIEW

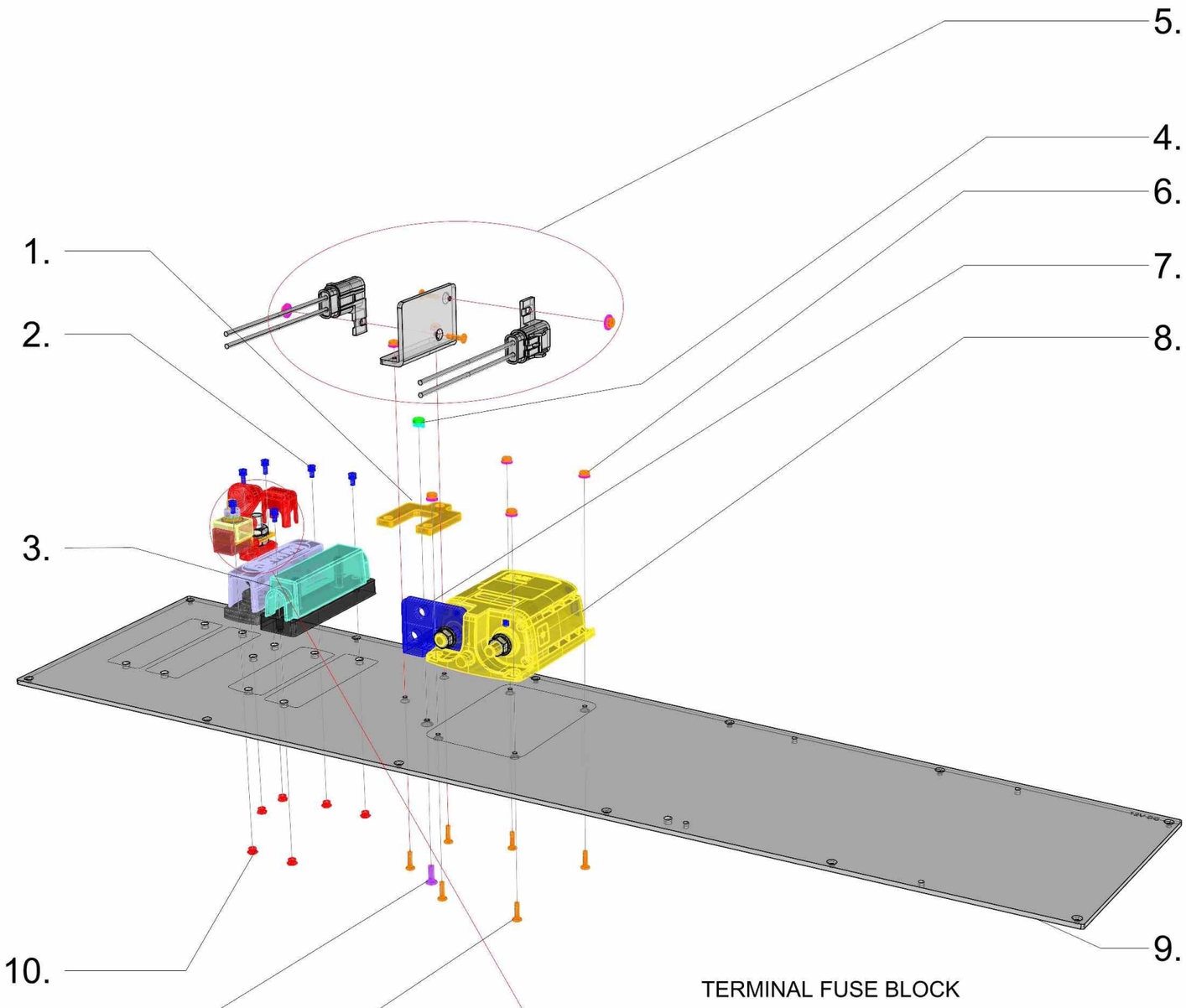

TERMINAL FUSE BLOCK

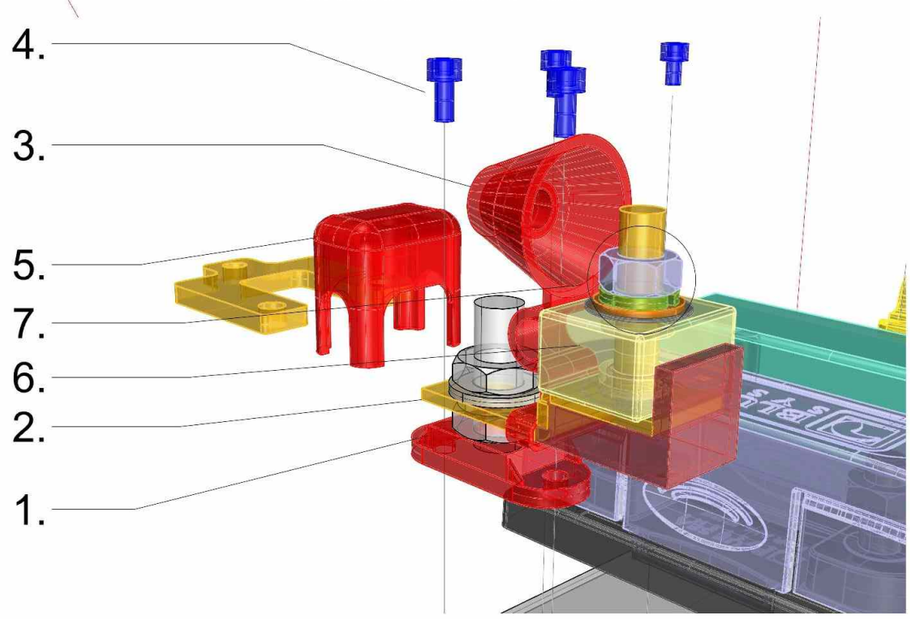

29615_AXOPAR_37_MY20_BATTERY_BOX_PORT_PANEL_1

1. 1 PC 30142_ANL_CONNECTION_BAR_DOUBLE
2. 4 PCS VMI30942 HEX SOCKET HEAD CAP SCREW M4X8 DIN912
3. 1 PC 14978_ANL_FUSE_HOLDER
   1 PC 13634 Blue Sea ANL FUSE BLOCK 5005 35A to 300A
4. 1 PC VMI31538 HEX NUT M5 DIN934
   1 PC VMI31540 SPRING LOCK WASHER M5 DIN127
5. 2 PCS 31516_Fuseholder waterproof ATO ATC 5065B-BSS (as in diagram)
   1 PC 38604_NAVIX_LINE_BRACKET_FOR_31516_FUSEHOLDER_(WOC)
   2 PC VMI30906 Flat Washer for HEX bolts and nuts M4 DIN125A
   2 PC VMI30904 SPRING LOCK WASHER M4 DIN127
   4 PC VMI30905 HEX NUT M4 DIN934
   2 PC VMI30917 COUNTERSUNK HEAD SCREW HEX SOCKET M4X16 DIN7991

6. 4 PCS VMI30905 HEX NUT M4 DIN934
   4 PCS VMI30904 SPRING LOCK WASHER M4 DIN127
7. 1 PC 30141_VIRTAKISKO_L_BLUE_SEA_ML_THREE_SPOT_LONG
8. 1 PC 16691 BATTERY SWITCH ML-RBS REMOTE
9. 1 PC 29898_AXOPAR_37_MY20_BATTERY_BOX_PORT_PANEL_1_(WOC_V7
10. 6 PCS 9872 PURISTEVÄLIHOLKKI ETSOS M4X4
11. 1 PC VMI31796 COUNTERSUNK HEAD SCREW HEX SOCKET M5X16 DIN7991
12. 6 PCS VMI30917 COUNTERSUNK HEAD SCREW HEX SOCKET M4X16 DIN7991

TERMINAL FUSE BLOCK - as in diagram
1. 1pc 36213 POWER DISTRIBUTION STUD IS-10mm-1R
2. 1pc 34642 CFBAR1-250SP SINGLE STUD
3. 1pc 34641 -B.6 CFCOVER-1R SINGLE STUD/RED
4. 2pcs VMI30942 HEX SOCKET HEAD CAP SCREW M4X8 DIN912
5. 1pc 31588 INSULATED COVER POSITIVE RED ISC-10R
6. 1pc 34640 -PS_F.6 CUBE FUSE MRFB-080 80A
7. 1pc VMI36860 HEX NUT 1/4" "UNC A4
   1pc VMI31830 SPRING LOCK WASHER M6 DIN127
   1pc VMI31831 FLAT WASHER FOR HEX BOLTS AND NUTS M6 DIN125A
   1pc VMI36859 FLAT WIDE WASHER FOR HEX BOLTS AND NUTS M6

TE 28.06.-19
TE 11.10.-19
TE 17.04.-20
MN 09.09.-20
TE 02.12.-21
TE 14.03.-23
MN 27.09.2023 (Project 2004855)
HH 01.08.2024 (PROJECT 2005139)

Date of modification	Modified by	Description
17.2.2023	RK	F8: FUSE HOLDERS CHANGED TO 31516.
13.10.2023	PF	F9: 2004855; A_F.2 holder -> Bluesea, fuse moved to 39902, cable sizes
11.4.2024	PF	G10: 2005054/2005139; Bow ch fuse removed

Date 1.7.2019
Drawing by TuM
Sheet rev. 10
Project rev. G

NAVIX designed solutions

Boat: Axopar
Boat model: 37 MY20
Sub-product code: SEE EXP VIEW
Product code: 29615
Project ID:
Title: BATTERY BOX PORT PANEL 1
Loc: HL
Sheet: 151/ 210

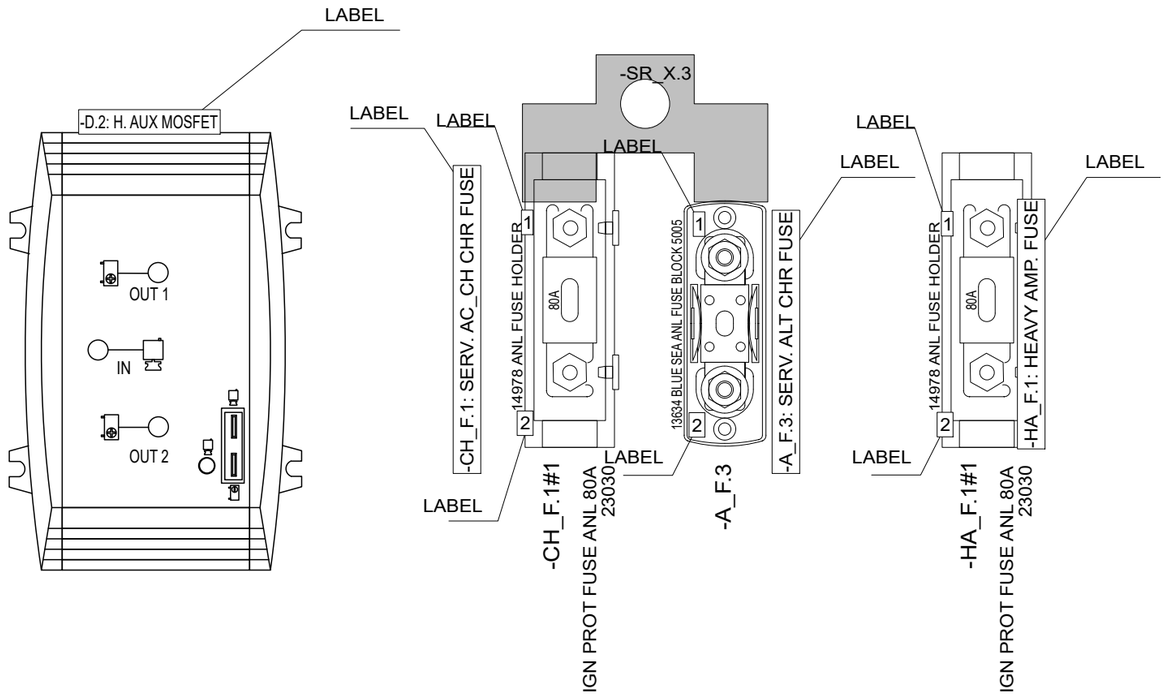

-D.2

38906
Battery Isolator 180A
1 input- 2 outputs
WHISPER WBI 180-
IG 2 OUTPUTS

H. AUX 180A MOSFET 1-2

LABEL INSTRUCTIONS

NOTICE! PUT LABELS TO FUSE HOLDER
BASE - NOT TO COVER.

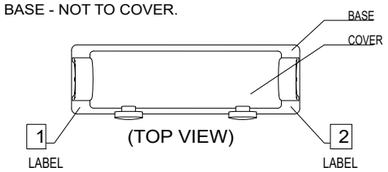

Date of modification	Modified by	Description
13.10.2023	PF	F5: 2004855; A_F.3 holder -> Bluesea, fuse moved to 39902, D.2
15.4.2024	PF	G6: 2005054; Updated panel, attachment for stern thruster equipment
17.2.2023	RK	F4: NOT MODIFIED.

Date	1.7.2019
Drawing by	TuM
Sheet rev.	6
Project rev.	G

NAVIX designed solutions
Copyright by

Axopar Boat	SEE EXP VIEW Sub-product code	29617 Product code	Project ID
37 MY20 Boat model	BATTERY BOX FWD WALL PANEL Title	HL Loc	152 / 210 Sheet

GENERAL LAYOUT/ LABELS

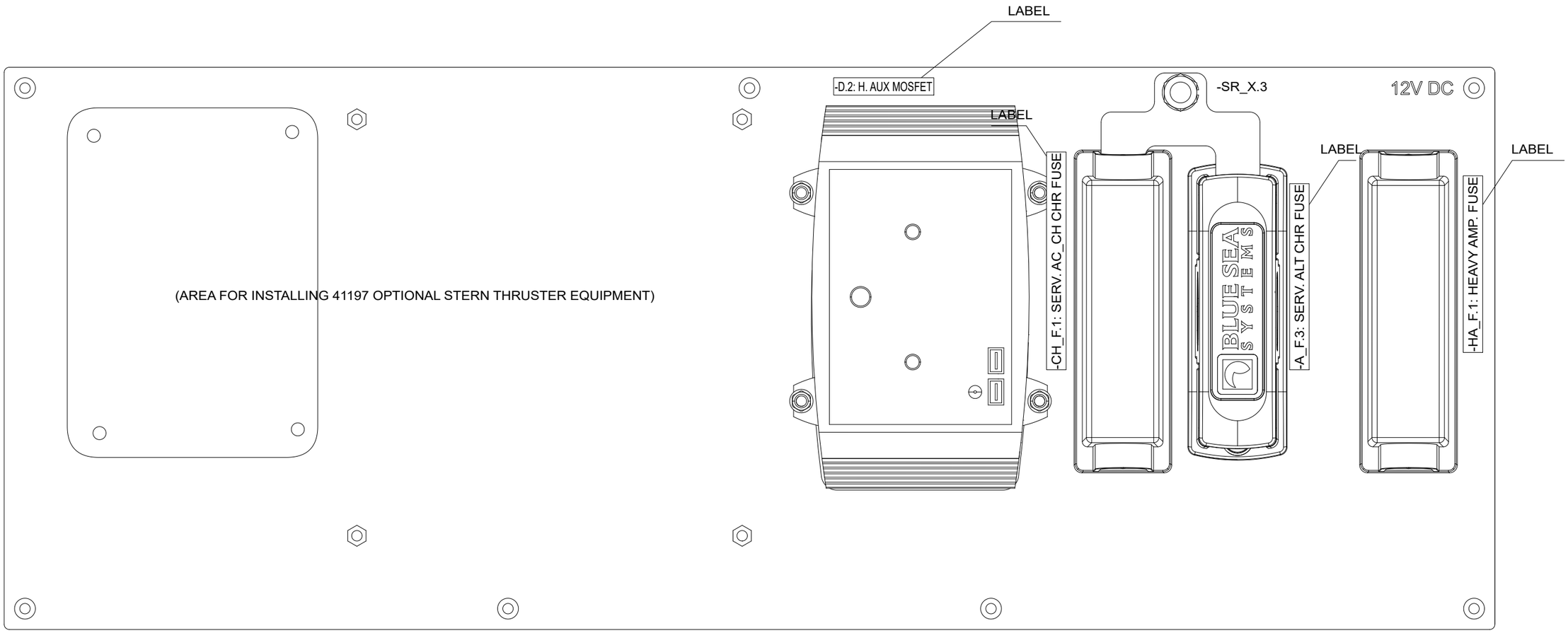

13.10.2023	PF	F5: 2004855; A_F.3 holder -> Bluesea, fuse moved to 39902, D.2	Date 1.7.2019	NAVIX designed solutions	Axopar	SEE EXP VIEW	29617	
15.4.2024	PF	G6: 2005054; Updated panel, attachment for stern thruster equipment	Drawing by TuM		Boat	Sub-product code	Product code	Project ID
17.2.2023	RK	F4: NOT MODIFIED.	Sheet rev. 6		37 MY20	BATTERY BOX FWD WALL PANEL	HL	153 / 210
Date of modification	Modified by	Description	Project rev. G	Copyright by	Boat model	Title	Loc	Sheet

29617_AXOPAR_37_MY20_BATTERY_BOX_FWD_WALL_PANEL

EXP VIEW

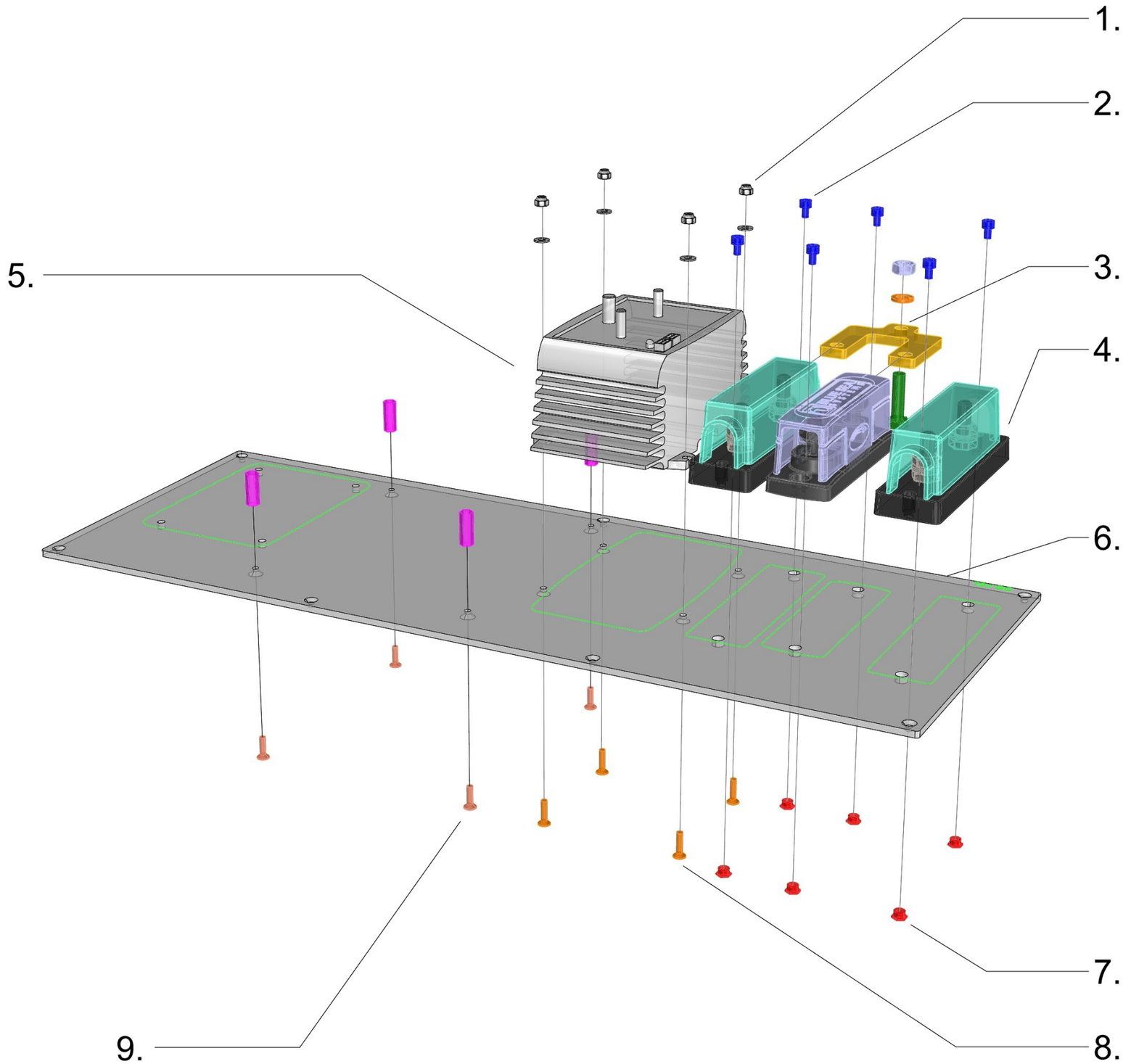

29617_AXOPAR_37_MY20_BATTERY_BOX_FWD_WALL_PANEL

1. 4 PCS VMI30818 SELF-LOCKING HEXAGON NUT M4 DIN985
   4 PCS VMI30906 FLAT WASHER FOR HEX BOLTS AND NUTS M4 DIN125A
2. 6 PCS VMI30942 - HEX socket Head Cap Screw M4X8 DIN912 C4
3. 1 PC 30142_ANL_CONNECTION_BAR_DOUBLE
   1 PC VMI32019 - HEX Bolt Full thread M8X30 DIN933 C4
   1 PC VMI32011 - Spring Lock washer M8 DIN127 C4
   1 PC VMI32012 - HEX Nut M8 DIN934 C4
4. 2 PCS 14978_ANL_FUSE_HOLDER (AS IN DIAGRAM)
   1 PC 13634 Blue Sea ANL FUSE BLOCK 5005 35A to 300A (AS IN DIAGRAM)
5. 1 PC 38906 BATTERY ISOLATOR (AS IN DIAGRAM)
6. 1 PC 29900_AXOPAR_37_MY20_BATTERY_BOX_FWD_WALL_PANEL_(WOC)_V6
7. 6 PCS 9872 - PURISTEVÄLIHOLKKI ETSOS-M4x4 - 50072
8. 4 PCS VMI30917 - Countersunk head Screw HEX socket M4X16 DIN7991 C4

9. 4 PCS VMI32036 - Extension Bolt M4 L-20
   4 PCS VMI30916 - Countersunk head Screw HEX socket M4X14 DIN7991 C4

TE 28.06.2019
MN 23.01.2020
TE 16.04.2020
MN 27.9.2023 (Project 2004855)
TS 18.4.2024 (Project 2005054)

13.10.2023	PF	F5: 2004855; A_F.3 holder -> Bluesea, fuse moved to 39902, D.2	Date	1.7.2019	NAVIX designed solutions	Axopar	SEE EXP VIEW	29617
15.4.2024	PF	G6: 2005054; Updated panel, attachment for stern thruster equipment	Drawing by	TuM		Boat	Sub-product code	Product code / Project ID
17.2.2023	RK	F4: NOT MODIFIED.	Sheet rev.	6		37 MY20	BATTERY BOX FWD WALL PANEL	HL
Date of modification	Modified by	Description	Project rev.	G	Copyright by	Boat model	Title	Loc / Sheet 154 / 210

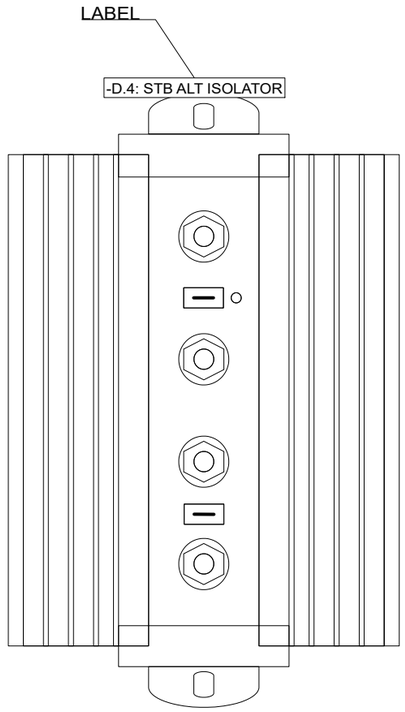

-D.4
38826
BatteryMate 2503 IG
Isolator 3-output 200A

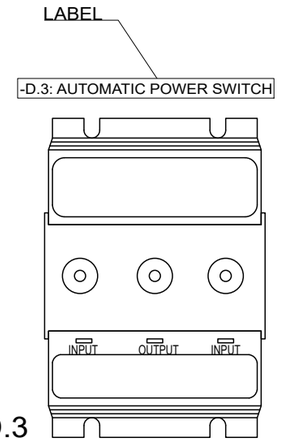

-D.3
23655
Battery Combiner 80A, 2 batteries
Victron BCD 802

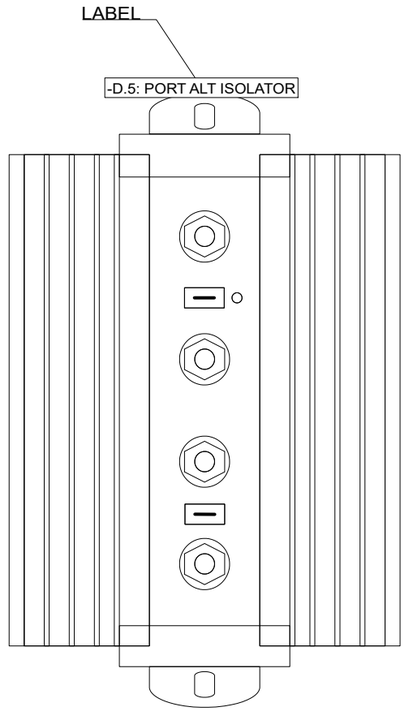

-D.5
38826
BatteryMate 2503 IG
Isolator 3-output 200A

19.4.2024	PF	G5: 2005054; Not modified	Date	27.6.2019	NAVIX designed solutions	Axopar Boat	SEE EXP. VIEW Sub-product code	29618 Product code	Project ID
17.2.2023	RK	F4: NOT MODIFIED.	Drawing by	TuM					
13.10.2023	PF	F5: 2004855; V10 update - isolators changed to Mastervolt	Sheet rev.	5		37 MY20 Boat model	BATTERY BOX AFT WALL PANEL Title	HL Loc	155 / 210 Sheet
Date of modification	Modified by	Description	Project rev.	G	Copyright by				

GENERAL LAYOUT/ LABELS

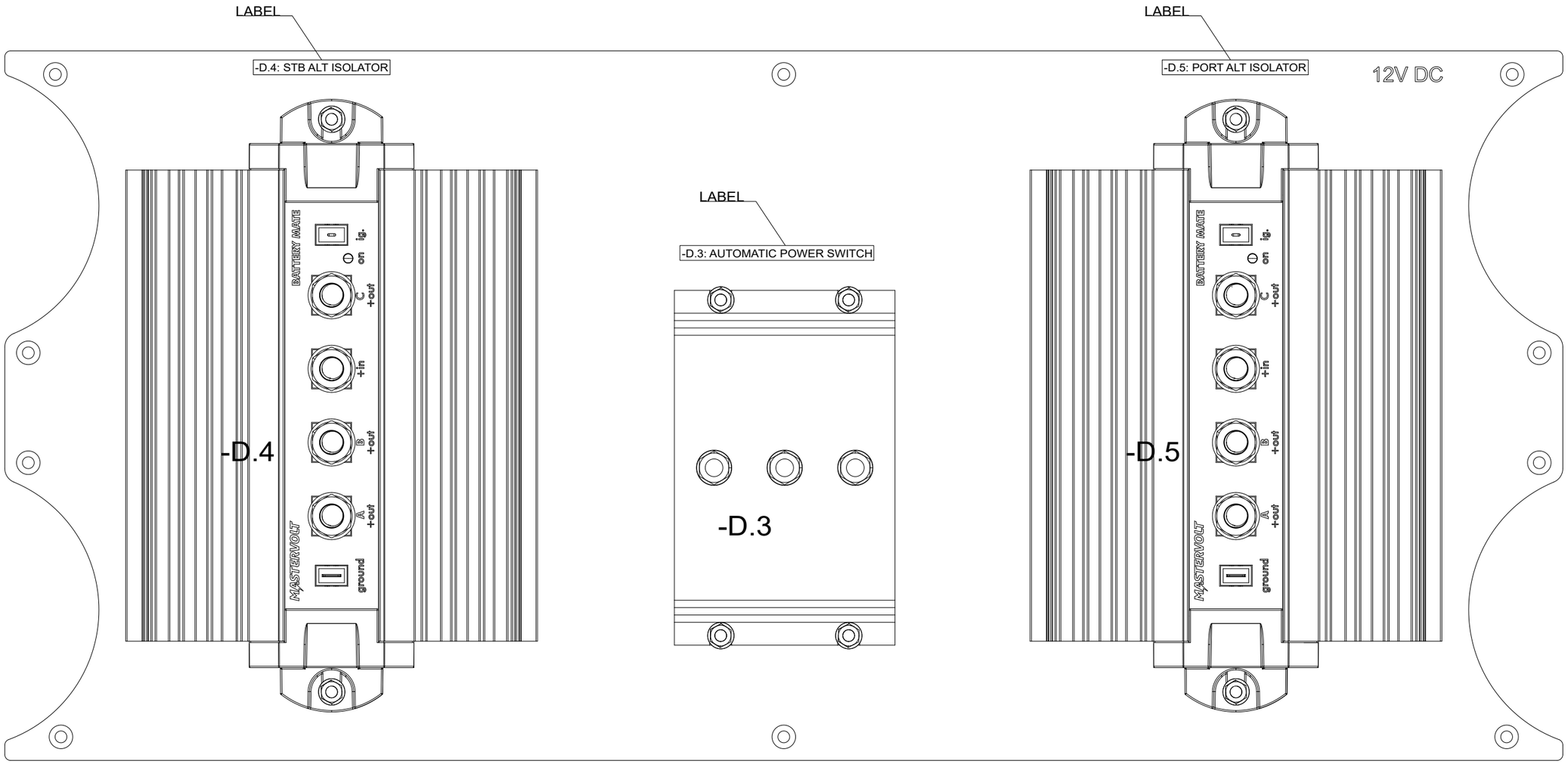

19.4.2024	PF	G5: 2005054; Not modified	Date	27.6.2019	NAVIX designed solutions	Axopar	SEE EXP. VIEW	29618	
17.2.2023	RK	F4: NOT MODIFIED.	Drawing by	TuM		Boat	Sub-product code	Product code	Project ID
13.10.2023	PF	F5: 2004855; V10 update - isolators changed to Mastervolt	Sheet rev.	5		37 MY20	BATTERY BOX AFT WALL PANEL	HL	156 / 210
Date of modification	Modified by	Description	Project rev.	G	Copyright by	Boat model	Title	Loc	Sheet

EXP VIEW

29618_AXOPAR_37_MY20_BATTERY_BOX_AFT_WALL_PANEL

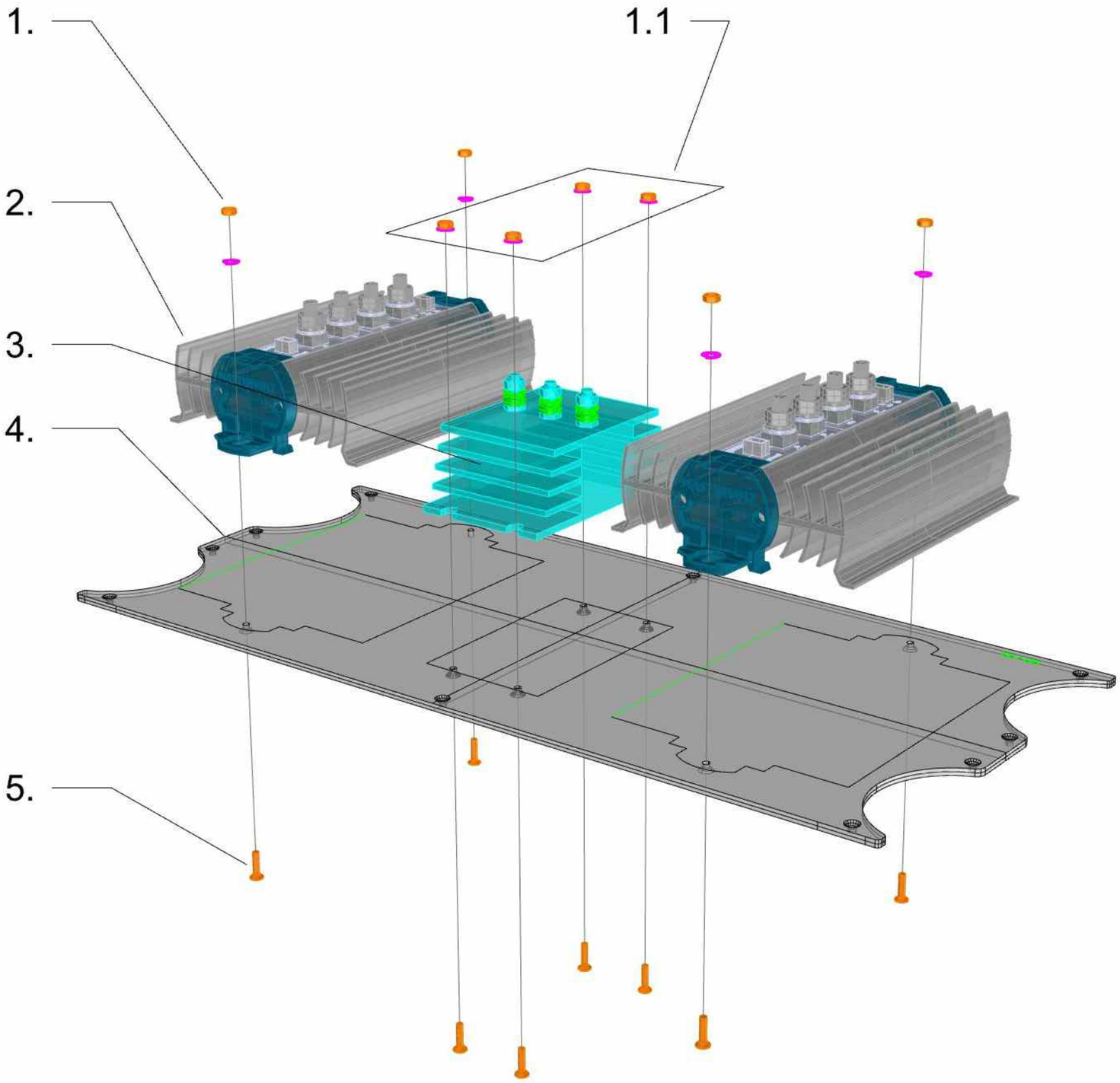

29618_AXOPAR_37_MY20_BATTERY_BOX_AFT_WALL_PANEL

1. 4 PCS M4 NUT A4
   4 PCS M4 SPRING WASHER
   4 PCS M4 WASHER
1.1 4 PCS M4 NUT A4
   4 PCS M4 SPRING WASHER
   4 PCS M4 WIDE WASHER
2. 2 PCS 38826 BATTERYMATE 2503 IG ISOLATOR 3-OUTPUT 200A
3. 1 PC 23655 VICTOR BCD 802 SOURCE COMBINER
4. 1 PC 29901_AXOPAR_37_MY20_BATTERY_BOX_AFT_WALL_PANEL_(WOC)_V4
5. 8 PCS M4 L16 CS HEX BOLTS A4

TE 28.06.-19
TE 07.10.-19
MN 27.9.2023 (Project 2004855)

Date of modification	Modified by	Description
19.4.2024	PF	G5: 2005054; Not modified
17.2.2023	RK	F4: NOT MODIFIED.
13.10.2023	PF	F5: 2004855; V10 update - isolators changed to Mastervolt

Date 27.6.2019
Drawing by TuM
Sheet rev. 5
Project rev. G

NAVIX designed solutions

Boat: Axopar
Boat model: 37 MY20
Sub-product code: SEE EXP. VIEW
Product code: 29618
Project ID
Title: BATTERY BOX AFT WALL PANEL
HL
Loc
Sheet: 157 / 210

NOTICE!
VERIFY THAT ALL CABLES HAVE MARKINGS
SHOWN IN EXAMPLE BELOW.
EXEMPTION:
ALL <500mm WIRES AND BLACK WIRES
THIS MARKING IS NOT NEEDED.

MARKING: R2 ISO 6722 100V AWG16 +100 C
CABLE

EXAMPLE: RED 1,5mm2 WIRE MARKINGS.

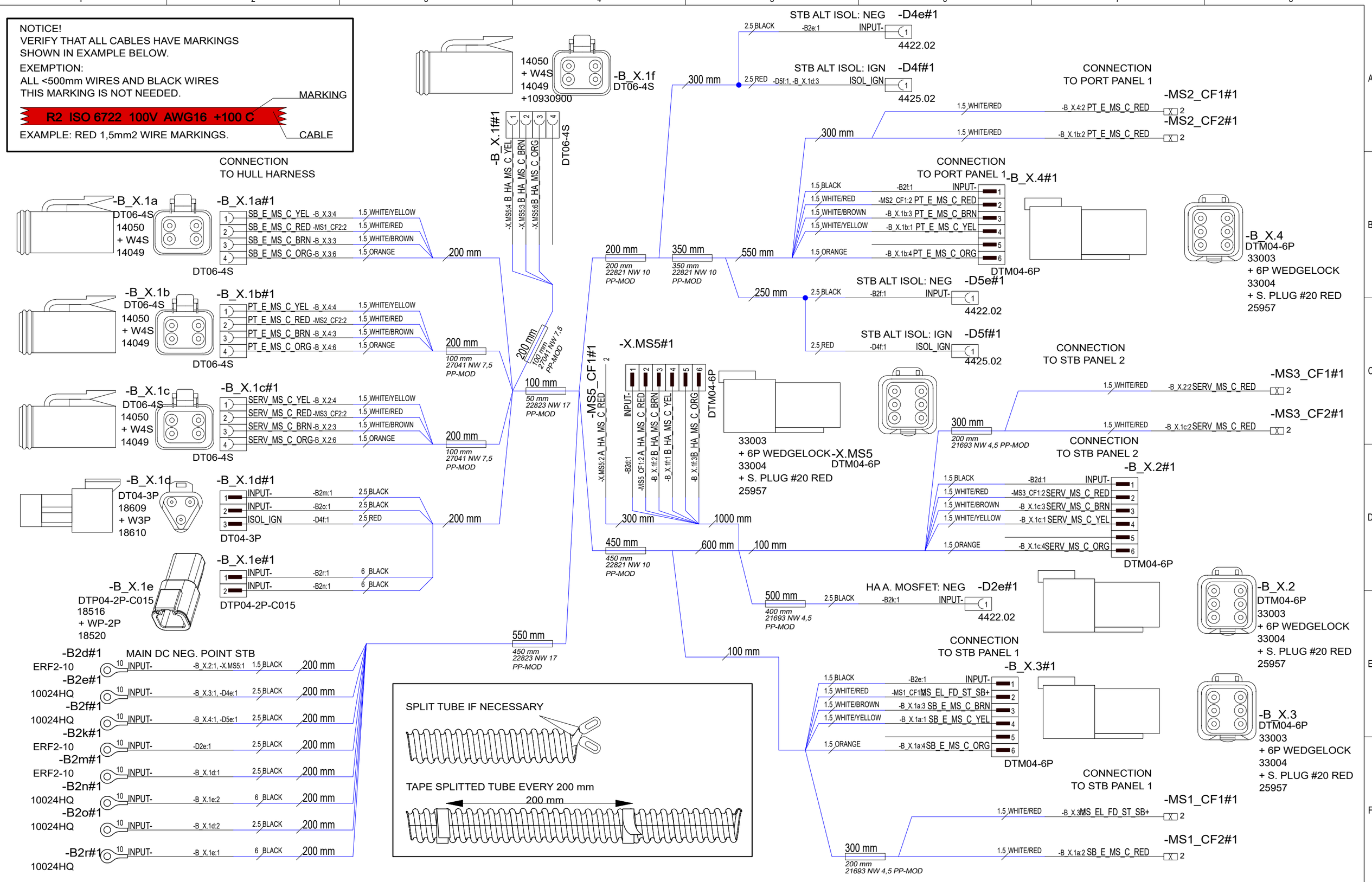

12.4.2024	PF	G8: 2005054; B_X1f & -X.MS5 added	Date	8.7.2019	NAVIX designed solutions	Axopar		29620
22.9.2021	VV	E6: NOT MODIFIED / REVISION RETURNED TO REV. E.	Drawing by	TuM		Boat	Sub-product code	Product code / Project ID
17.2.2023	RK	F7: LENGTH MODIFICATIONS.	Sheet rev.	8		37 MY20	BATTERY BOX HARNESS	HL
Date of modification	Modified by	Description	Project rev.	G	Copyright by	Boat model	Title	Loc / Sheet 158 / 210

NOTICE!
VERIFY THAT ALL CABLES HAVE MARKINGS
SHOWN IN EXAMPLE BELOW.

EXEMPTION:
ALL <500mm WIRES AND BLACK WIRES
THIS MARKING IS NOT NEEDED.

MARKING

R2 ISO 6722 100V AWG16 +100 C

CABLE

EXAMPLE: RED 1,5mm2 WIRE MARKINGS.

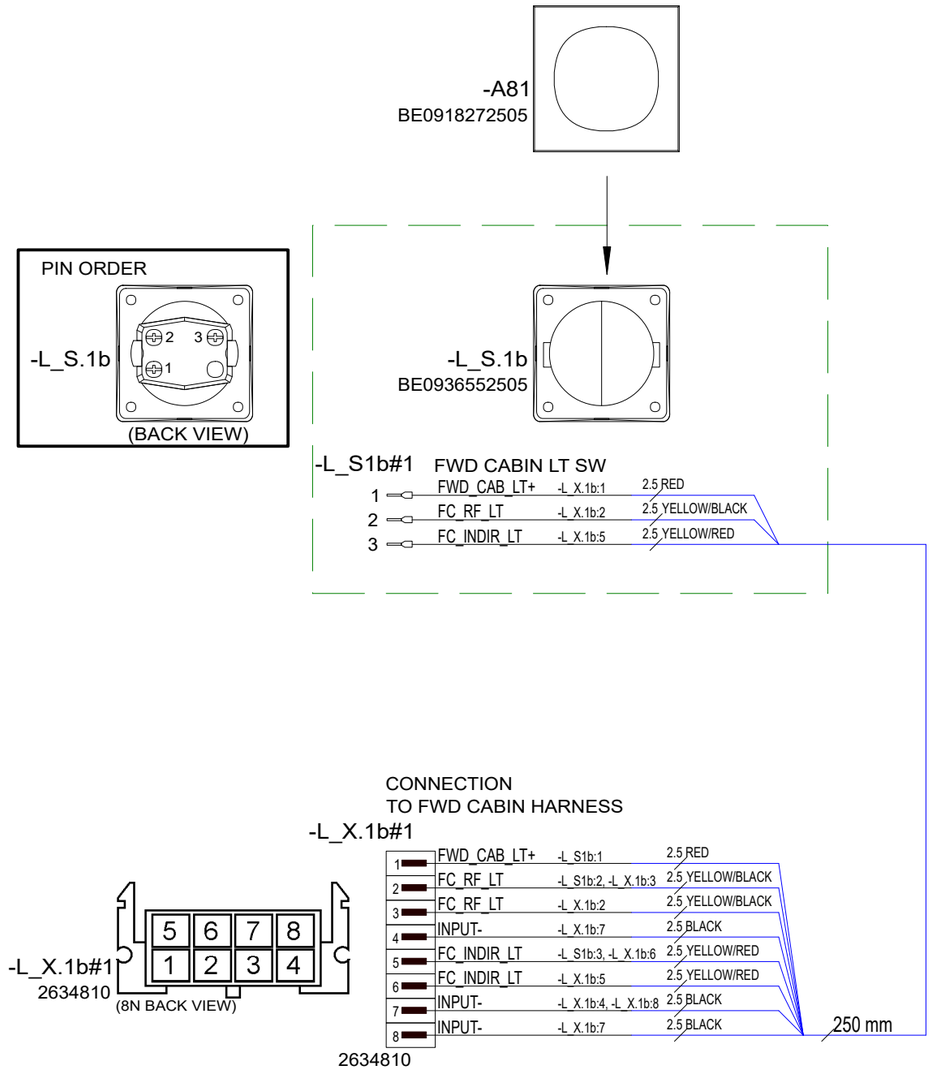

4.4.2024	PF	G6: 2005054; Modified as option for light pack switch	Date	22.5.2019	NAVIX designed solutions	Axopar		29635	
22.9.2021	VV	E5: NOT MODIFIED / REVISION RETURNED TO REV. E.	Drawing by	TuM		Boat	Sub-product code	Product code	Project ID
17.2.2023	RK	F5: NOT MODIFIED.	Sheet rev.	6		37 MY20	FWD CABIN LIGHT SWITCH	HL	159 / 210
Date of modification	Modified by	Description	Project rev.	G	Copyright by	Boat model	Title	Loc	Sheet

NOTICE!
VERIFY THAT ALL CABLES HAVE MARKINGS
SHOWN IN EXAMPLE BELOW.

EXEMPTION:
ALL <500mm WIRES AND BLACK WIRES
THIS MARKING IS NOT NEEDED.

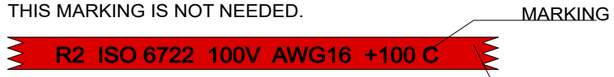

EXAMPLE: RED 1,5mm2 WIRE MARKINGS.

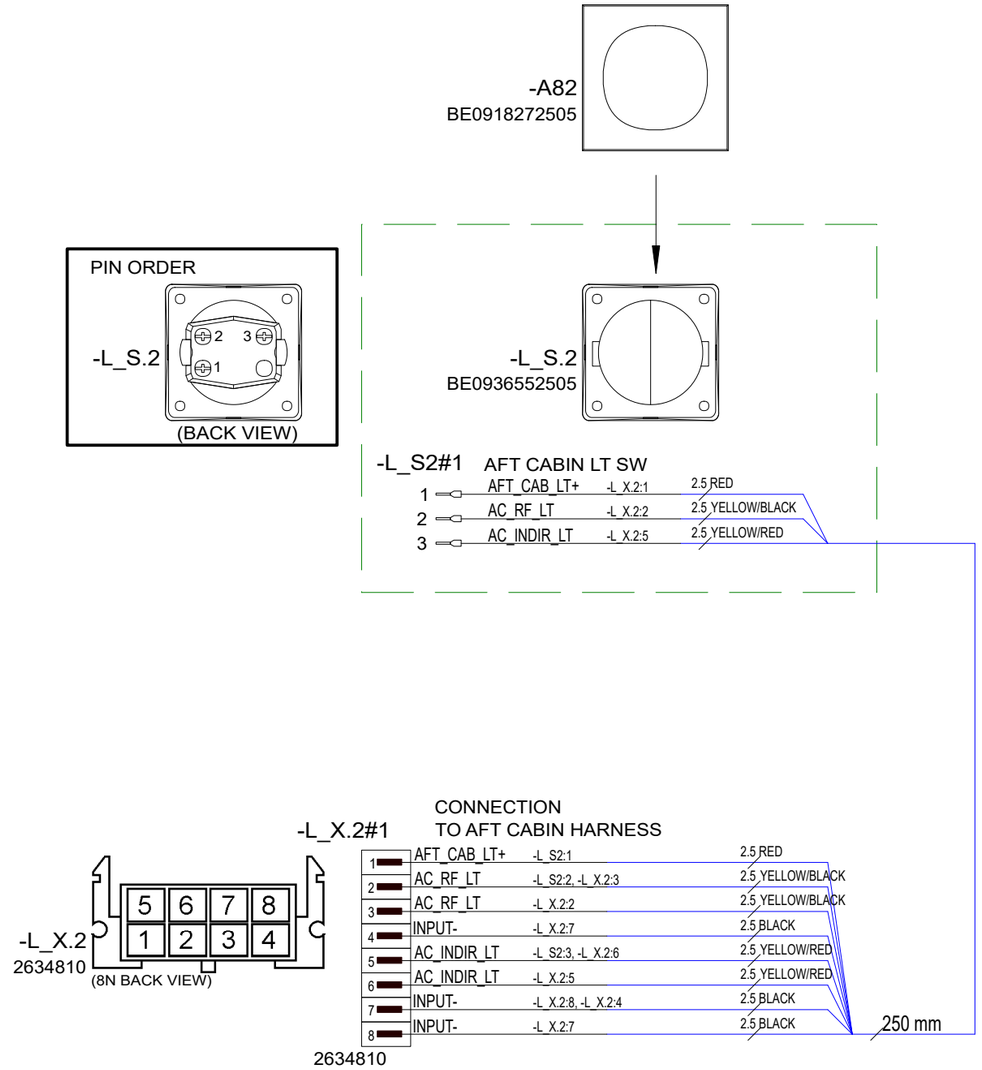

22.9.2021	VV	E3: NOT MODIFIED / REVISION RETURNED TO REV. E.	Date	22.5.2019	NAVIX designed solutions	Axopar		29636	
17.2.2023	RK	F3: NOT MODIFIED.	Drawing by	TuM		Boat	Sub-product code	Product code	Project ID
4.4.2024	PF	G4: 2005054; Modified as option for light pack switch	Sheet rev.	4		37 MY20	AFT CABIN LIGHT SWITCH	HL	160 / 210
Date of modification	Modified by	Description	Project rev.	G	Copyright by	Boat model	Title	Loc	Sheet

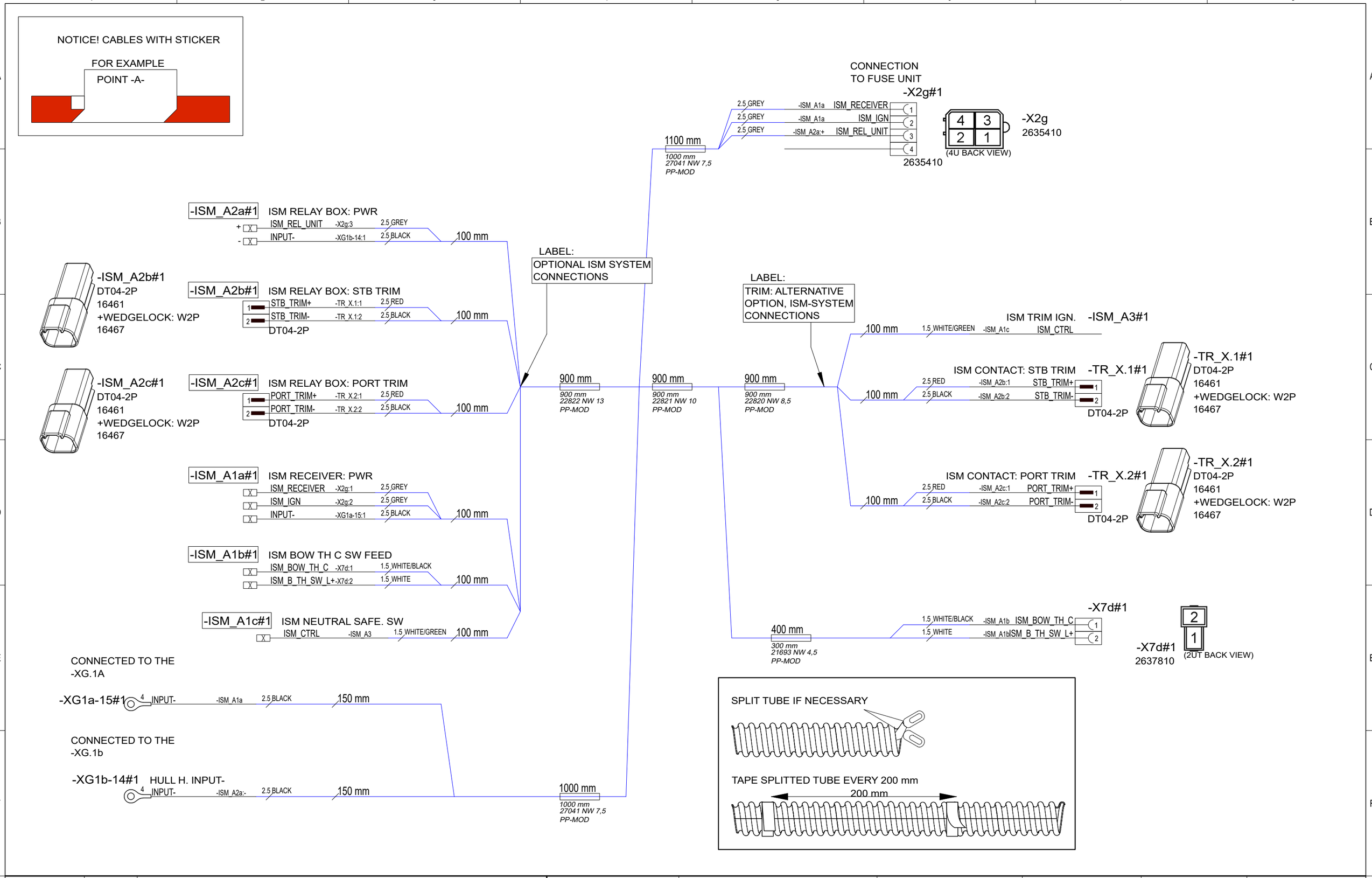

Date of modification	Modified by	Description
17.2.2023	RK	F3: NOT MODIFIED.
12.4.2024	PF	G3: 2005054; Not modified
22.9.2021	VV	E3: NOT MODIFIED / REVISION RETURNED TO REV. E.

Date	25.9.2019
Drawing by	TuM
Sheet rev.	3
Project rev.	G

NAVIX designed solutions
Copyright by

Axopar		30735	
Boat	Sub-product code	Product code	Project ID
37 MY20	ISM HARNESS	HL	161/ 210
Boat model	Title	Loc	Sheet

NOTICE!
BATTERY CABLES NEED TO ADD MARKINGS
SHOWN IN EXAMPLE BELOW.

EXEMPTION:
ALL BLACK WIRES
THIS MARKING IS NOT NEEDED.

MARKING

R2 ISO 6722 100V AWG6 +100 C

CABLE

EXAMPLE: RED 16mm2 WIRE MARKINGS.

MARKING SHOWN ABOVE ONLY TO CABLES LISTED BELOW.

LOOK FOR EQUIVALENT AWG SIZE FOR mm2
AND ADD THIS TO CABLE MARKINGS.

FOR EXAMPLE:
CABLE SIZE IS 25mm2 --> MARKING AWG3.

EQUIVALENCY:

mm2		AWG
10 mm2	=	AWG8
16 mm2	=	AWG6
25 mm2	=	AWG3
35 mm2	=	AWG2

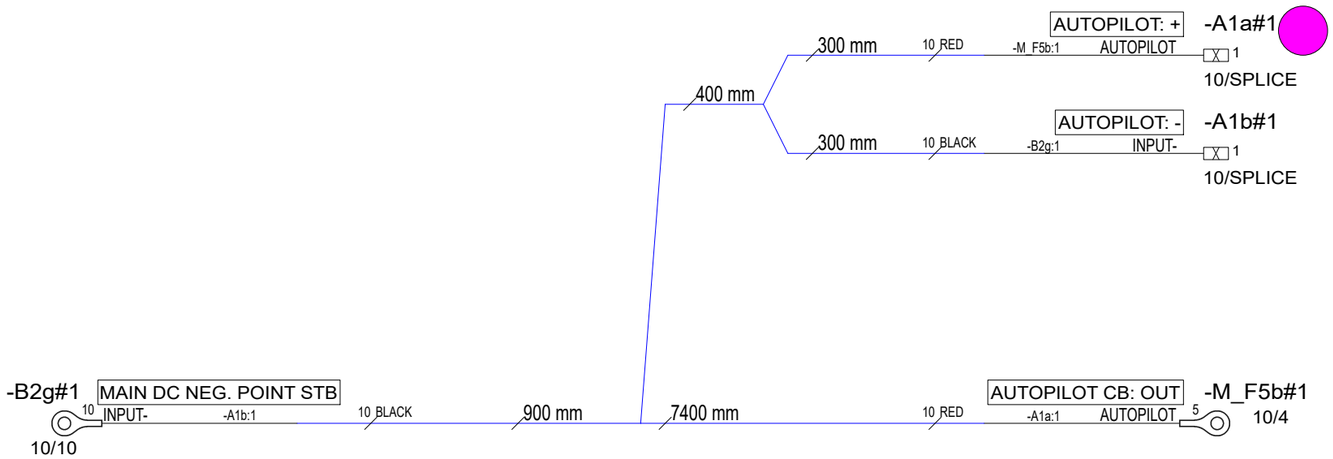

12.4.2024	PF	G3: 2005054; Not modified	Date	25.9.2019	NAVIX designed solutions	Axopar		30736	
22.9.2021	VV	E3: NOT MODIFIED / REVISION RETURNED TO REV. E.	Drawing by	TuM		Boat	Sub-product code	Product code	Project ID
17.2.2023	RK	F3: NOT MODIFIED.	Sheet rev.	3		37 MY20	AUTOPILOT HARNESS	HL	162 / 210
Date of modification	Modified by	Description	Project rev.	G	Copyright by	Boat model	Title	Loc	Sheet

NOTICE! CABLES WITH STICKER

FOR EXAMPLE

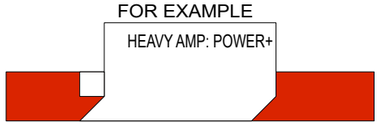

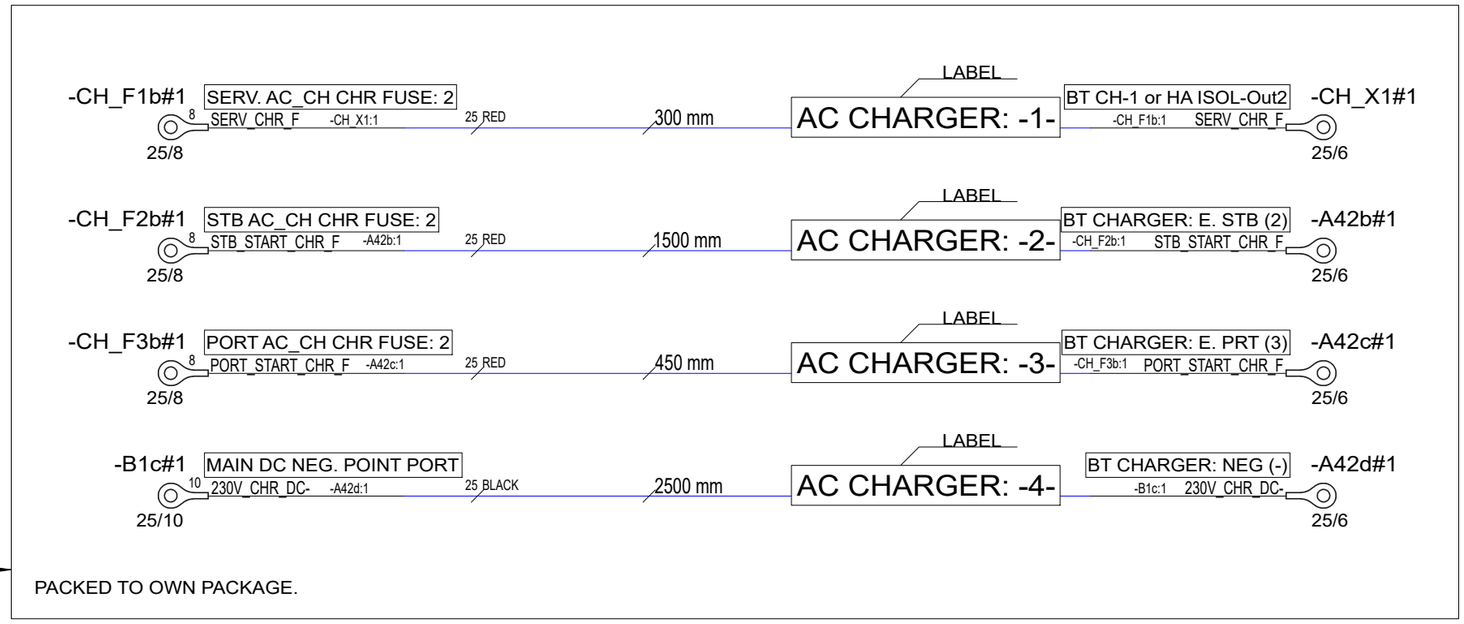

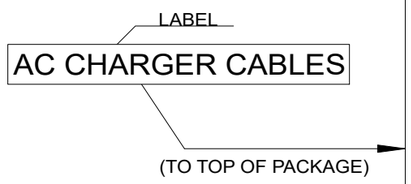

PACKED TO OWN PACKAGE.

NOTICE!
BATTERY CABLES NEED TO ADD MARKINGS
SHOWN IN EXAMPLE BELOW.

EXEMPTION:
ALL BLACK WIRES
THIS MARKING IS NOT NEEDED.

MARKING

R2 ISO 6722 100V AWG6 +100 C

CABLE

EXAMPLE: RED 16mm2 WIRE MARKINGS.

MARKING SHOWN ABOVE ONLY TO CABLES LISTED BELOW.

LOOK FOR EQUIVALENT AWG SIZE FOR mm2
AND ADD THIS TO CABLE MARKINGS.

FOR EXAMPLE:
CABLE SIZE IS 25mm2 --> MARKING AWG3.

EQUIVALENCY:

mm2		AWG
10 mm2	=	AWG8
16 mm2	=	AWG6
25 mm2	=	AWG3
35 mm2	=	AWG2

Date of modification	Modified by	Description
19.4.2024	PF	G4: 2005054; Not modified
22.9.2021	VV	E4: NOT MODIFIED / REVISION RETURNED TO REV. E.
17.2.2023	RK	F4: NOT MODIFIED.

Date	26.9.2019
Drawing by	TuM
Sheet rev.	4
Project rev.	G

NAVIX designed solutions

Copyright by

Axopar Boat		30737 Product code	Project ID
37 MY20 Boat model	BATTERY BOX CHARGER CABLES Title	HL Loc	163 / 210 Sheet

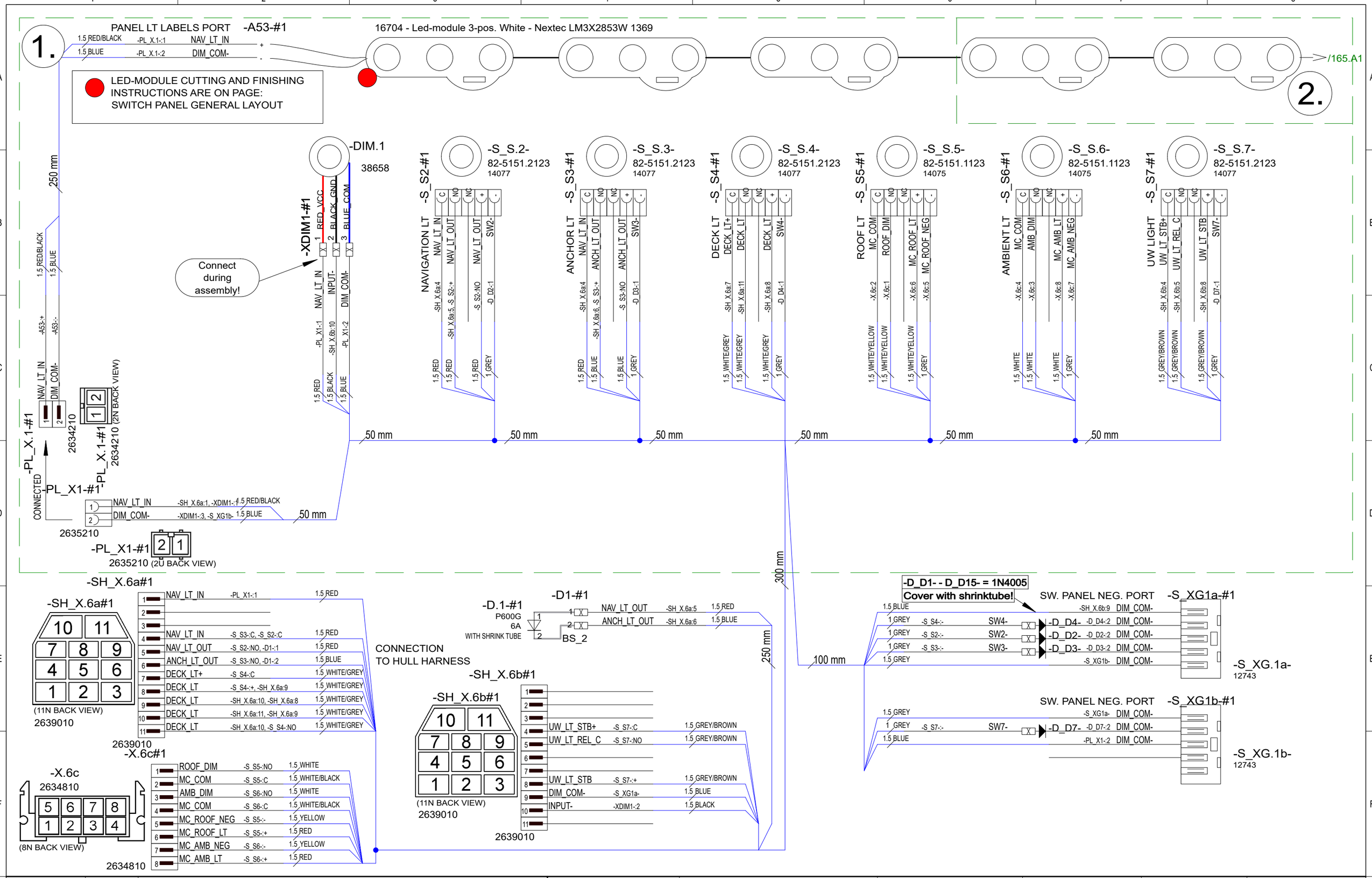

17.2.2023	RK	F8: NOT MODIFIED	Date	6.11.2019	NAVIX designed solutions	Axopar	SEE EXP VIEW	30810
16.10.2023	PF	F9: 2004916; Added dimming feature, F10: Bilge halo dimming removed	Drawing by	TuM		Boat	Sub-product code	Product code / Project ID
15.03.2024	PF	G11:2005054; Added s15, S1 replaced with dimmer, test insruction update	Sheet rev.	11		37 MY20 SHADOW	SWITCH PANEL	HL
Date of modification	Modified by	Description	Project rev.	G	Copyright by	Boat model	Title	Loc / 164 / 210 Sheet

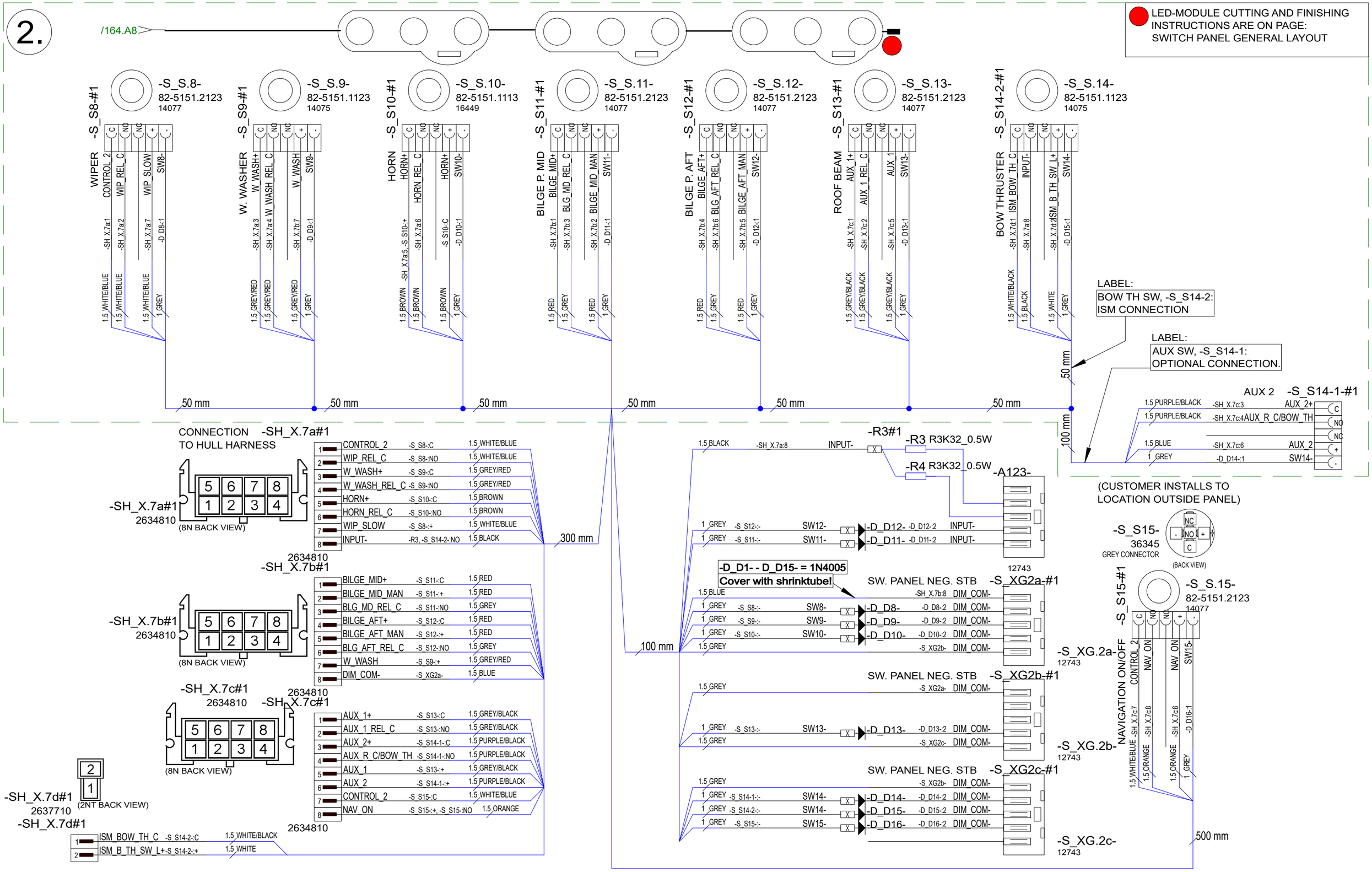

17.2.2023	RK	F8: NOT MODIFIED	Date 6.11.2019	NAVIX designed solutions	Axopar	SEE EXP VIEW	30810
16.10.2023	PF	F9: 2004916; Added dimming feature, F10: Bilge halo dimming removed	Drawing by TuM		Boat	Sub-product code	Product code / Project ID
15.03.2024	PF	G11:2005054; Added s15, S1 replaced with dimmer, test insruction update	Sheet rev. 11		37 MY20 SHADOW	SWITCH PANEL	HL
Date of modification	Modified by	Description	Project rev. G	Copyright by	Boat model	Title	Loc / Sheet 165 / 210

SWITCH PANEL GENERAL LAYOUT / LED MODULE CUTTING & FINISHING

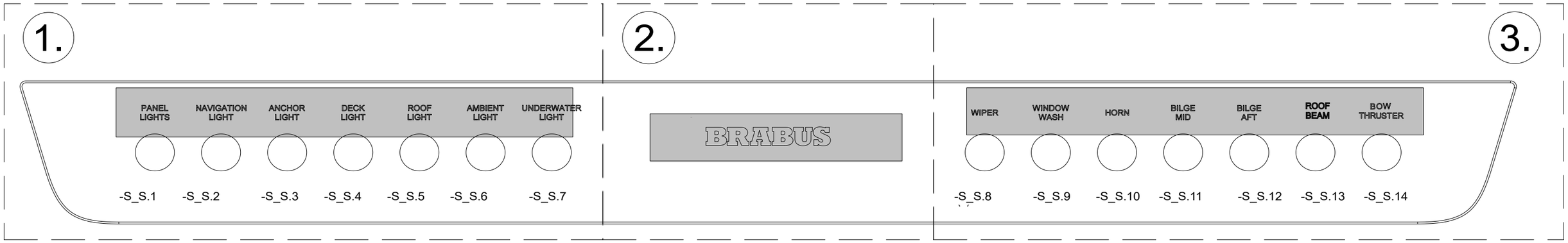

16704 - Led-module 3-pos. White - Nextec LM3X2853W 1369

BUNDLE EXTRA WIRING BETWEEN MODULES TO THE LOOPS AND STRING WITH ZIP TIES

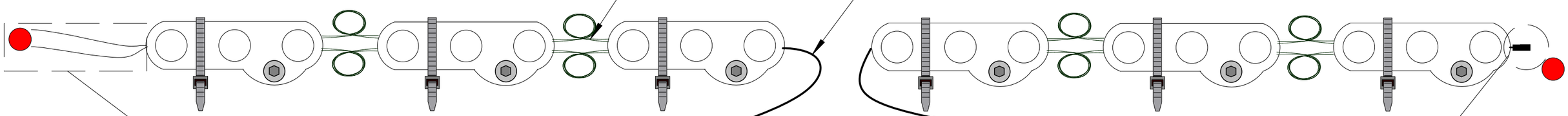

CUT LED MODULES INPUT SIDE OF THE WIRES APPROX. 60mm LENGTH
(SHOULD BE ABOUT THE CENTER POS. BETWEEN 2 MODULES)

STRIP WIRE ENDS APPROX. 7mm AND CRIMP WIRES TO THE BUTT SPLICE CONNECTORS -A53.

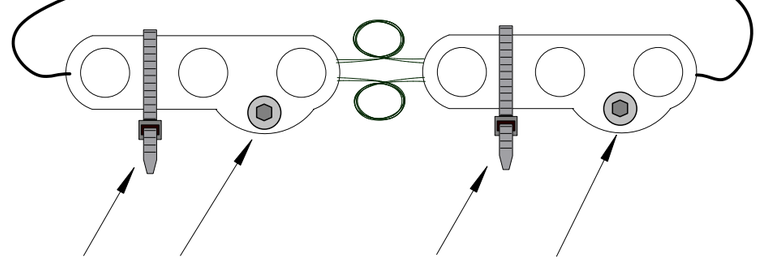

ATTACH ALL LED MODULES TO THE BRACKET 36371 WITH M3X12 BH HEX BOLT A4, NUT M3 AND 2-SIDED TAPE. ADD CABLE TIE. SEE ALSO EXP. VIEW

TURN THE ENDS OF CABLE TIES TOWARDS TO THE PANEL!

1. CUT THE WIRES APPROX. 40mm. (JUST CUT, DO NOT STRIP!)

2. BEND THE WIRES TO THE SHAPE OF "U".

3. ADD APPROX. 20mm OF HEAT SHRINK TUBE "17418" OVER THE BENDED WIRES.

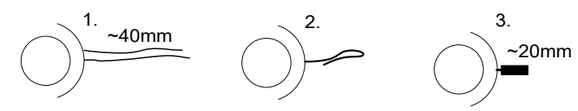

HOW TO BUNDLE EXTRA WIRING BETWEEN MODULES TO THE LOOPS AND STRING WITH ZIP TIES

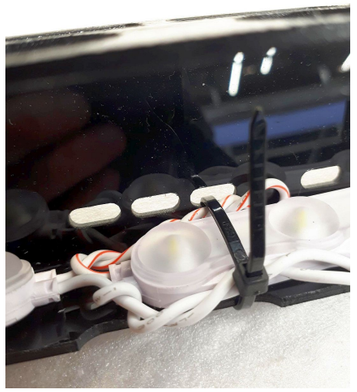

NOTICE!
VERIFY THAT ALL CABLES HAVE MARKINGS SHOWN IN EXAMPLE BELOW.

EXEMPTION:
ALL <500mm WIRES AND BLACK WIRES THIS MARKING IS NOT NEEDED.

MARKING

R2 ISO 6722 100V AWG16 +100 C

CABLE

EXAMPLE: RED 1,5mm2 WIRE MARKINGS.

Date of modification	Modified by	Description
17.2.2023	RK	F8: NOT MODIFIED
16.10.2023	PF	F9: 2004916; Added dimming feature, F10: Bilge halo dimming removed
15.03.2024	PF	G11:2005054; Added s15, S1 replaced with dimmer, test insruction update

Date	6.11.2019
Drawing by	TuM
Sheet rev.	11
Project rev.	G

NAVIX designed solutions
Copyright by

Axopar Boat	SEE EXP VIEW Sub-product code	30810 Product code	Project ID
37 MY20 SHADOW Boat model	SWITCH PANEL Title	HL Loc	166 / 210 Sheet

30810_AXOPAR_37_MY_20_SHADOW_SWITCH_PANEL

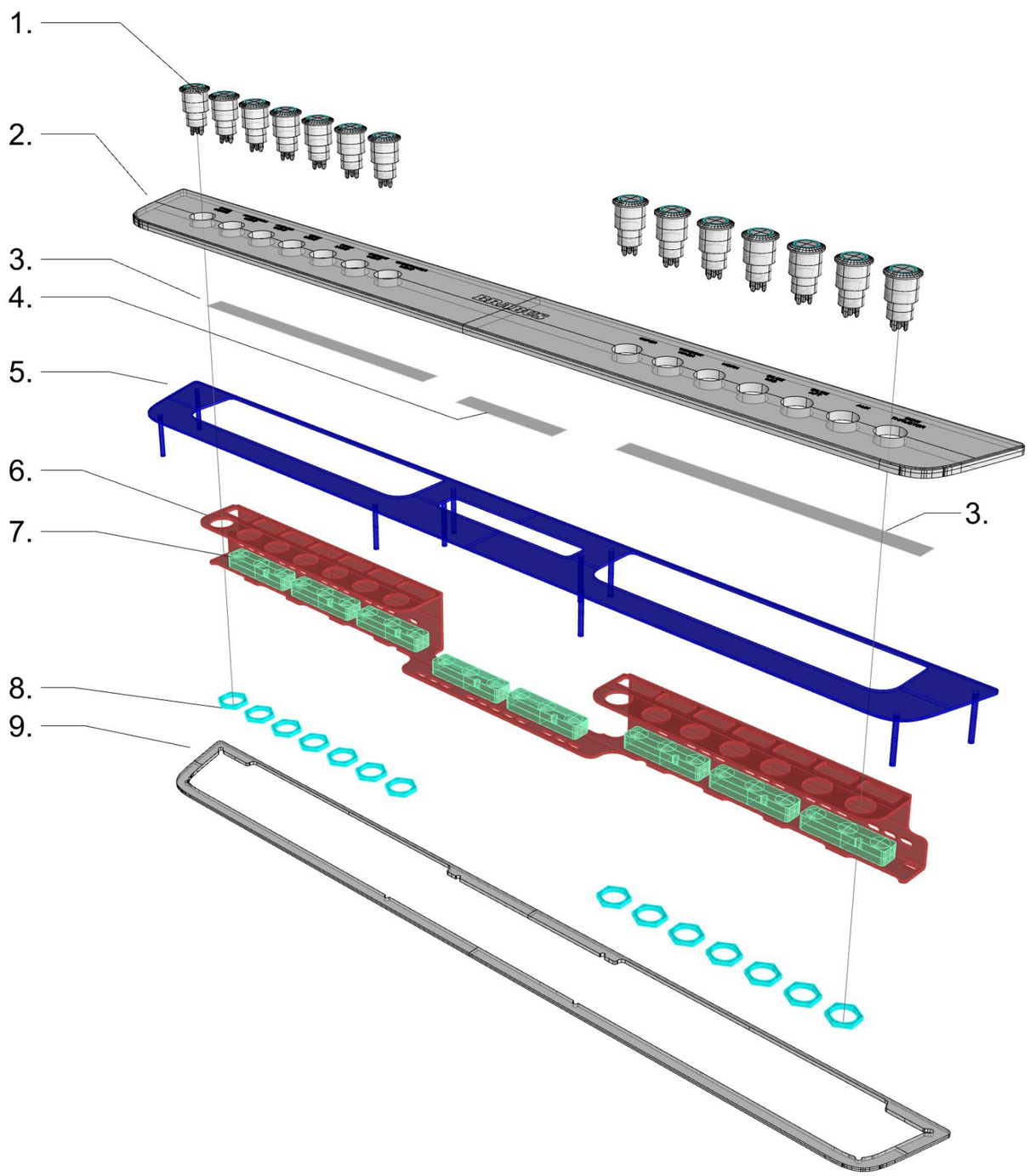

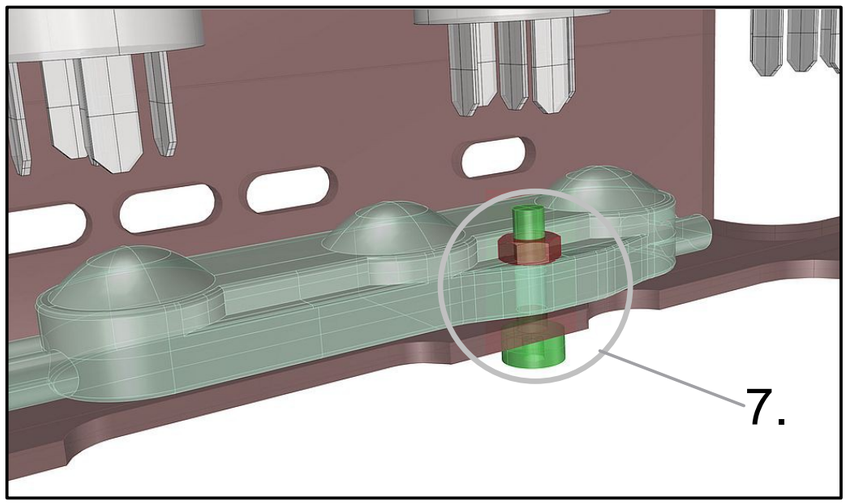

30810_AXOPAR_37_MY_20_SHADOW_SWITCH_PANEL

1. 14PCS HALO SWITCH (AS IN DIAGRAM)

2. 1PC 31118_AXOPAR_37_MY_20__SHADOW_ACRYL_SWITCH_PANEL_(WOC)

3. 2PCS 29771_AXOPAR_37_MY20_SWITCH_PANEL_TEXT_STICKER
(PLACE BEHIND THE TEXT AREA IN 31118)

4. 1PC 28309_AXOPAR_37_SHADOW_SWITCH_PANEL_LOGO_STICKER
(PLACE BEHIND THE TEXT AREA IN 31118)

5. 1PC 29768_AXOPAR_37_MY20_SWITCH_PANEL_METAL_BACK_FRAME
ATTACH TO 31118 WITH BLACK MS-POLYMER GLUE

6. 1PC 36371_AXOPAR_SWITCH_PANEL_LED_MODULE_BRACKET_(WOC)

7. 8PCS 16704 LED MODULE WHITE ATTATCH TO 36371 WITH M3X12 BH HEX BOLT A4 AND NUT
ATTACH TO BRACKET WITH CABLE TIES AND 2-SIDED TAPE

8. 14PCS HALO SWITCH NUT

9. 1PCS 29769_AXOPAR_37_MY20_SWITCH_PANEL_GASKET_(WOC)
GLUE WITH 2-SIDED TAPE TO THE BACKSIDE OF 29768

TE 30.10.2019
MN 18.11.2019
TE 11.01.2021
HL 11.03.2022

EXP VIEW

17.2.2023	RK	F8: NOT MODIFIED	Date	6.11.2019	NAVIX designed solutions	Axopar	SEE EXP VIEW	30810
16.10.2023	PF	F9: 2004916; Added dimming feature, F10: Bilge halo dimming removed	Drawing by	TuM		Boat	Sub-product code	Product code
15.03.2024	PF	G11:2005054; Added s15, S1 replaced with dimmer, test insruction update	Sheet rev.	11		37 MY20 SHADOW	SWITCH PANEL	HL
Date of modification	Modified by	Description	Project rev.	G	Copyright by	Boat model	Title	Loc

Project ID

167 / 210
Sheet

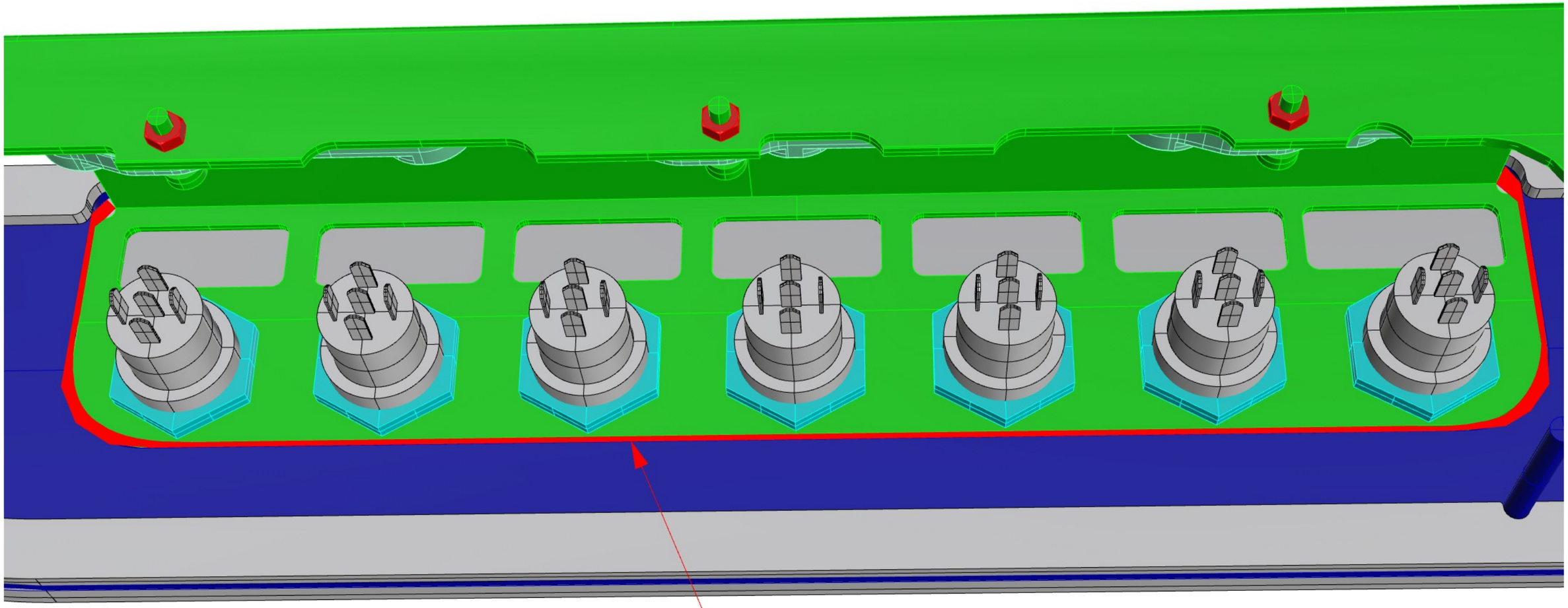

FILL THE CAP BETWEEN
METAL FRAME AND LED BRACKET
WITH 21119 MS-POLYMER BLACK GLUE
GLUE MUST BE FLUSH WITH PANELS

17.2.2023	RK	F8: NOT MODIFIED.	Date	6.11.2019	NAVIX designed solutions	Axopar	SEE EXP. VIEW	30810
16.10.2023	PF	F9: 2004916; Added dimming feature, F10: Bilge halo dimming removed	Drawing by	TuM		Boat	Sub-product code	Product code
15.03.2024	PF	G11:2005054; Added s15, S1 replaced with dimmer, test insruction update	Sheet rev.	11		37 MY20 SHADOW	SWITCH PANEL	HL
Date of modification	Modified by	Description	Project rev.	G	Copyright by	Boat model	Title	Loc

Project ID

168 / 210
Sheet

Axopar 37 MY20 SWITCH PANEL 30810 INSPECTION SHEET

PRUDUCT LABEL

TEST
1) S2, S3, S4 should be pressed. No other buttons may be pressed during entire test. Power source off.
2) Connect -X.6b/9 and -X.7b/8 with a wire.
3) Connect positive (+12V) to connectors listed below
4) Connect negative (-) to -X.6b/10 and -X.7a/8. Turn power on.
5) Observe, change brightness and turn on/off by pressing DIM1. Panel lights and switch halos must illuminate. S11 and S12 should illuminate constantly with full brightness, S5 and S6 should not illuminate at all. All other lights should turn on/off/dim from DIM1.

Connect positive (+)
SH_X.6a/1
SH_X.6a/4
SH_X.6a/7
SH_X.6b/8
SH_X.7a/7
SH_X.7b/7
SH_X.7a/5
SH_X.7b/2
SH_X.7b/5
SH_X.7c/5
SH_X.7c/6
SH_X.7d/2

Connect negative (-)
SH_X.6b/10
SH_X.7a/8

PASS / FAIL

DATE _____

TESTED BY _____

TEST INSTRUCTIONS

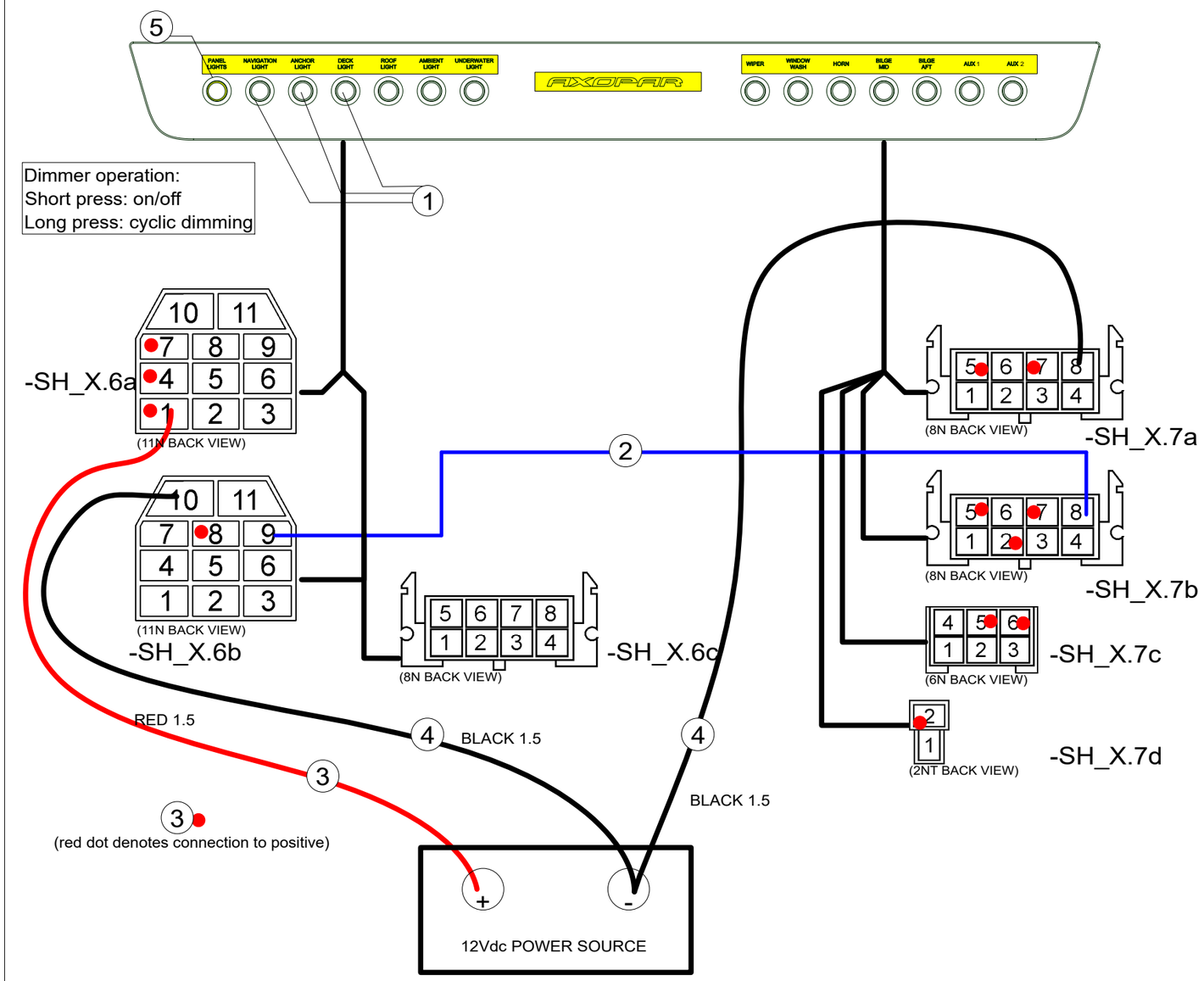

17.2.2023	RK	F8: NOT MODIFIED	Date	6.11.2019	NAVIX designed solutions	Axopar	SEE EXP VIEW	30810	
16.10.2023	PF	F9: 2004916; Added dimming feature, F10: Bilge halo dimming removed	Drawing by	TuM		Boat	Sub-product code	Product code	Project ID
15.03.2024	PF	G11:2005054; Added s15, S1 replaced with dimmer, test insruction update	Sheet rev.	11		37 MY20 SHADOW	SWITCH PANEL	HL	169 / 210
Date of modification	Modified by	Description	Project rev.	G	Copyright by	Boat model	Title	Loc	Sheet

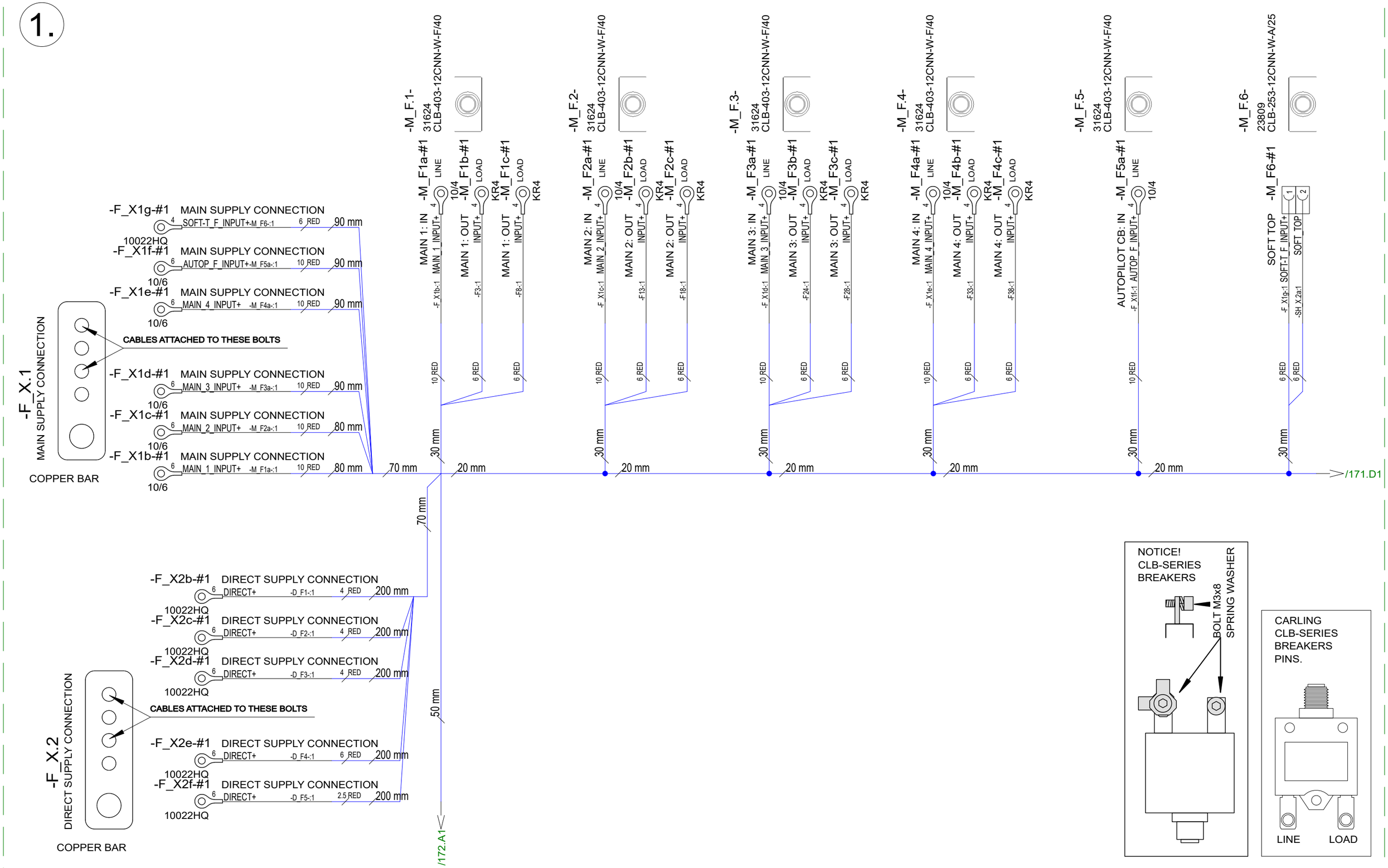

23.11.2023	PF	F10: 2004954; Changed livewell fuse to 3A	Date	24.4.2020	NAVIX designed solutions	Axopar	SEE EXP VIEW	30811
13.4.2024	PF	G11: 2005054; F47 10A->16A, F3 15A->10A	Drawing by	TuM		Boat	Sub-product code	Product code / Project ID
17.2.2023	RK	F9: -F18 NOW USED FOR WETBAR LT	Sheet rev.	11		37 MY20 SHADOW	FUSE UNIT	HL
Date of modification	Modified by	Description	Project rev.	G	Copyright by	Boat model	Title	Loc / Sheet 170 / 210

2.

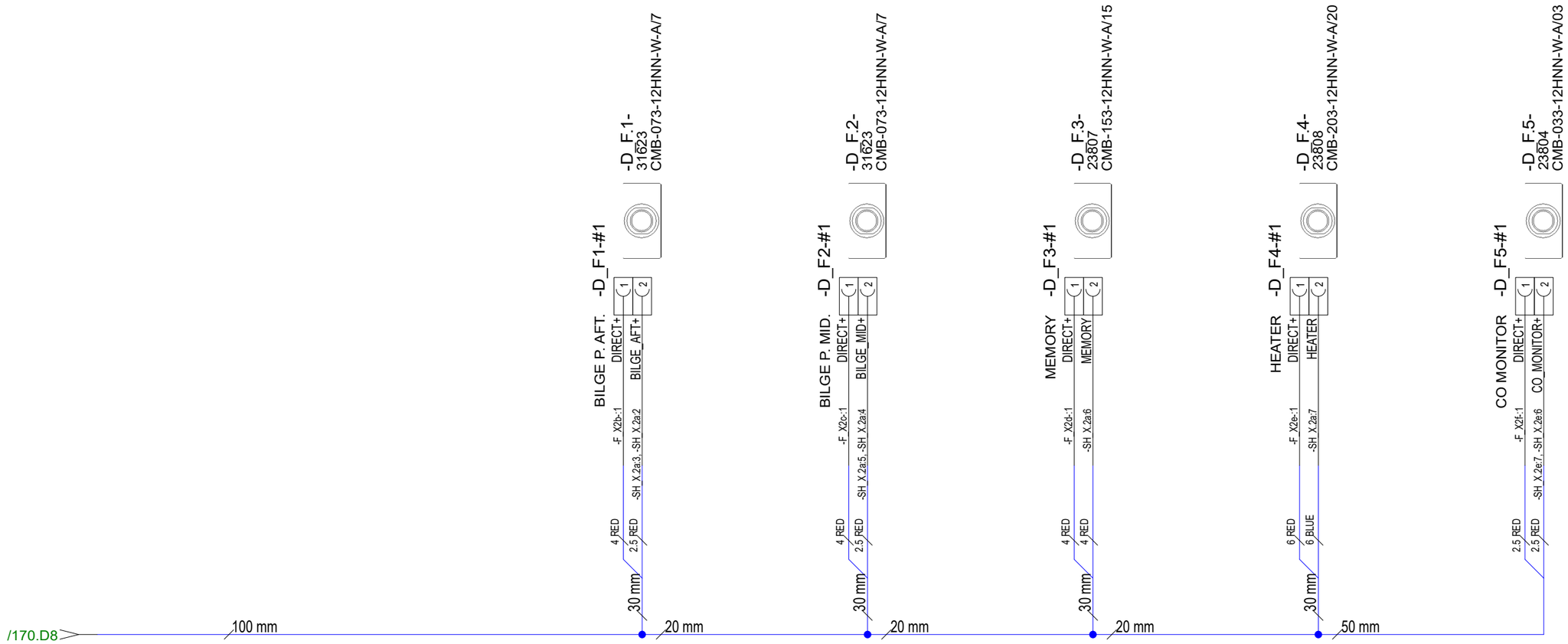

23.11.2023	PF	F10: 2004954; Changed livewell fuse to 3A	Date 24.4.2020	NAVIX designed solutions	Axopar	SEE EXP VIEW	30811	
13.4.2024	PF	G11: 2005054; F47 10A->16A, F3 15A->10A	Drawing by TuM		Boat	Sub-product code	Product code	Project ID
17.2.2023	RK	F9: -F18 NOW USED FOR WETBAR LT	Sheet rev. 11		37 MY20 SHADOW	FUSE UNIT	HL	171/ 210
Date of modification	Modified by	Description	Project rev. G	Copyright by	Boat model	Title	Loc	Sheet

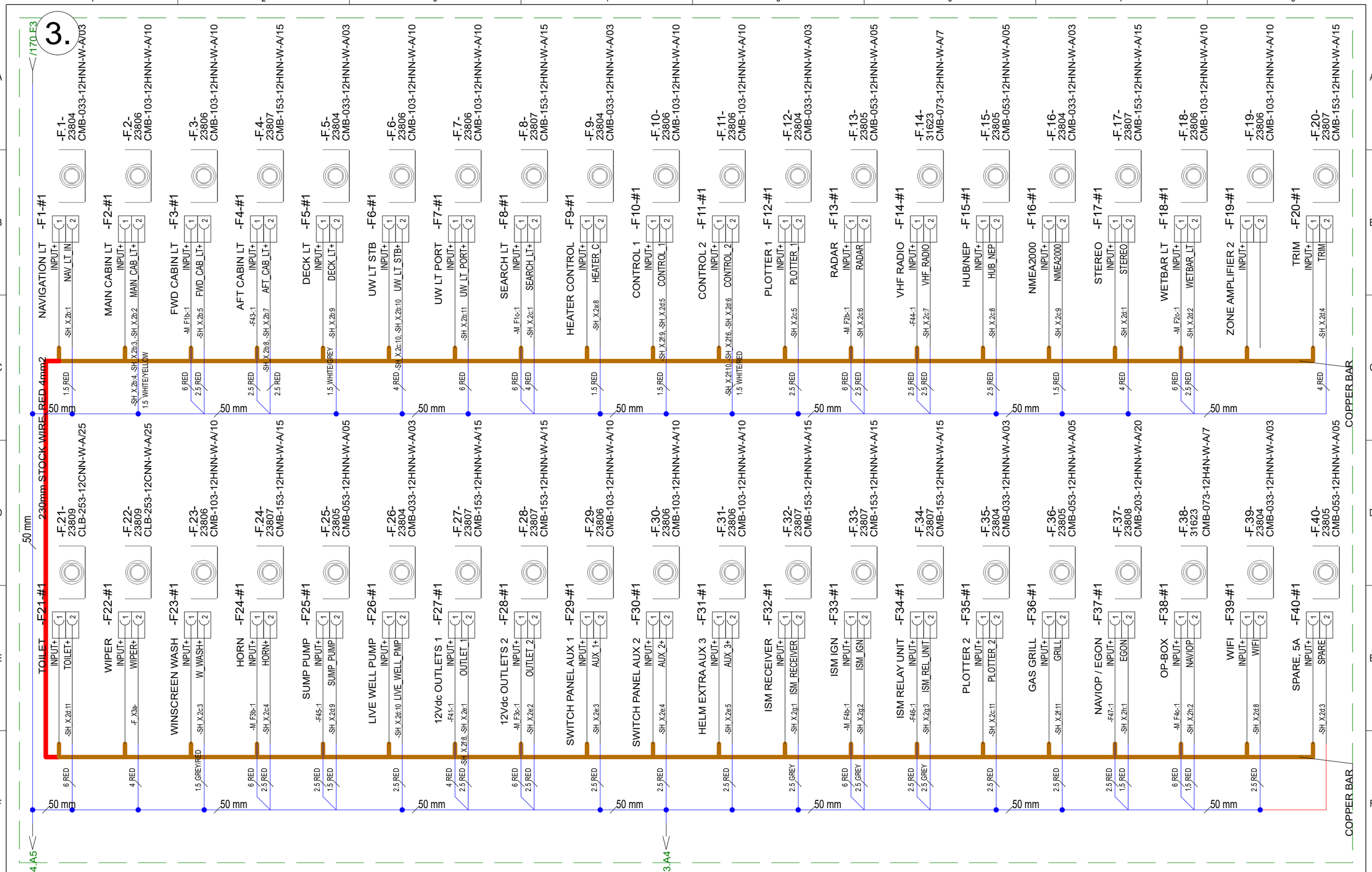

23.11.2023	PF	F10: 2004954; Changed livewell fuse to 3A	Date	24.4.2020	NAVIX designed solutions	Axopar	SEE EXP VIEW	30811
13.4.2024	PF	G11: 2005054; F47 10A->16A, F3 15A->10A	Drawing by	TuM		Boat	Sub-product code	Product code / Project ID
17.2.2023	RK	F9: -F18 NOW USED FOR WETBAR LT	Sheet rev.	11		37 MY20 SHADOW	FUSE UNIT	HL
Date of modification	Modified by	Description	Project rev.	G	Copyright by	Boat model	Title	Loc / Sheet 172 / 210

4.

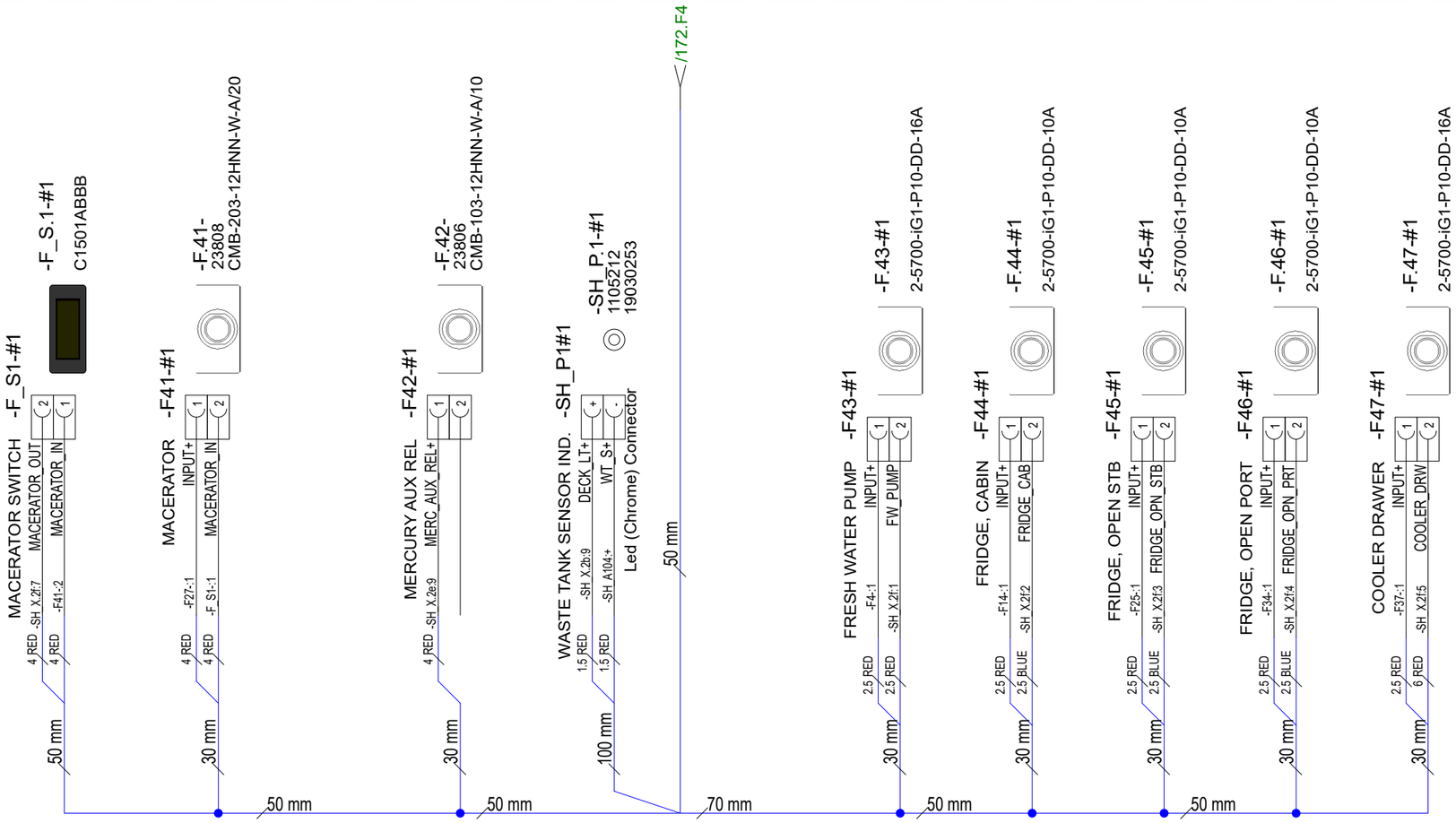

23.11.2023	PF	F10: 2004954; Changed livewell fuse to 3A	Date	24.4.2020	NAVIX designed solutions	Axopar	SEE EXP VIEW	30811
13.4.2024	PF	G11: 2005054; F47 10A->16A, F3 15A->10A	Drawing by	TuM		Boat	Sub-product code	Product code / Project ID
17.2.2023	RK	F9: -F18 NOW USED FOR WETBAR LT	Sheet rev.	11		37 MY20 SHADOW	FUSE UNIT	HL
Date of modification	Modified by	Description	Project rev.	G	Copyright by	Boat model	Title	Loc / 173 / 210 Sheet

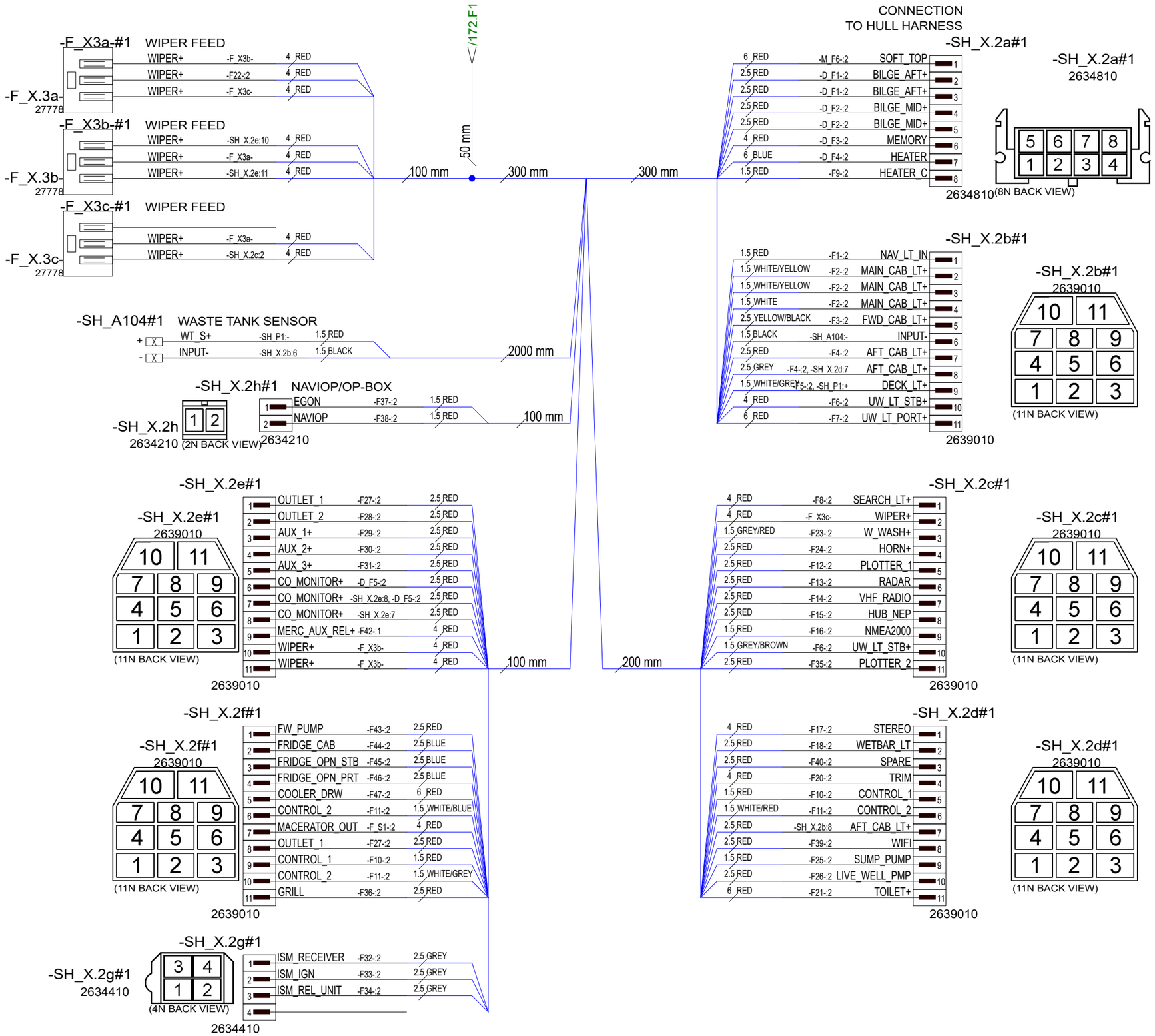

NOTICE!
VERIFY THAT ALL CABLES HAVE MARKINGS
SHOWN IN EXAMPLE BELOW.

EXEMPTION:
ALL <500mm WIRES AND BLACK WIRES
THIS MARKING IS NOT NEEDED.

MARKING

R2 ISO 6722 100V AWG16 +100 C

CABLE

EXAMPLE: RED 1,5mm2 WIRE MARKINGS.

Date of modification	Modified by	Description
23.11.2023	PF	F10: 2004954; Changed livewell fuse to 3A
13.4.2024	PF	G11: 2005054; F47 10A->16A, F3 15A->10A
17.2.2023	RK	F9: -F18 NOW USED FOR WETBAR LT

Date	24.4.2020
Drawing by	TuM
Sheet rev.	11
Project rev.	G

NAVIX designed solutions
Copyright by

Axopar Boat	SEE EXP VIEW Sub-product code	30811 Product code	Project ID
37 MY20 SHADOW Boat model	FUSE UNIT Title	HL Loc	174 / 210 Sheet

FUSE PANEL GENERAL LAYOUT/ LABELS

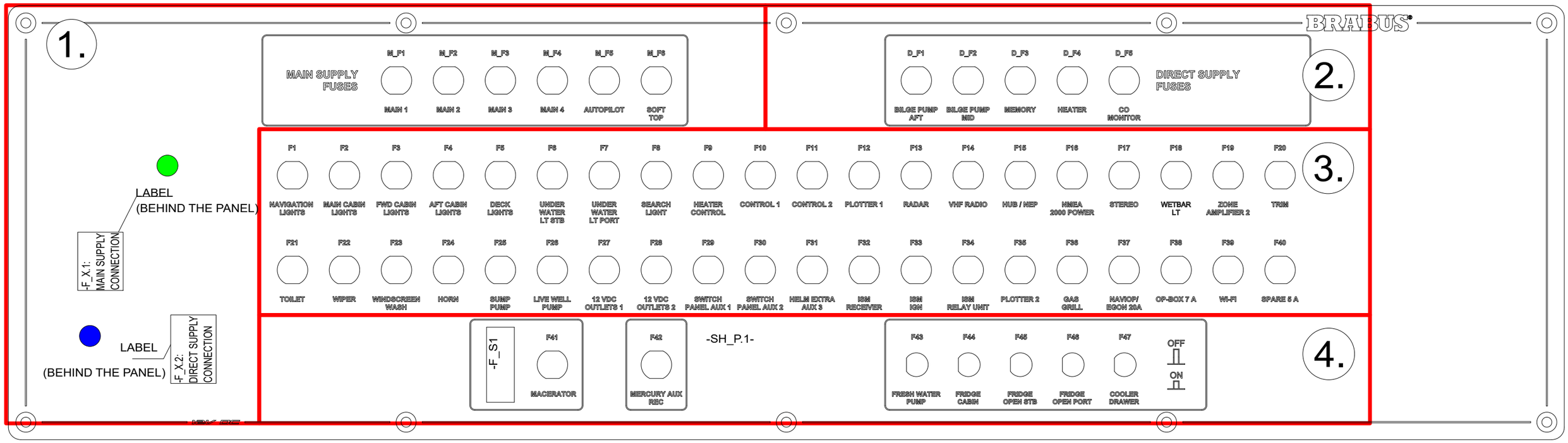

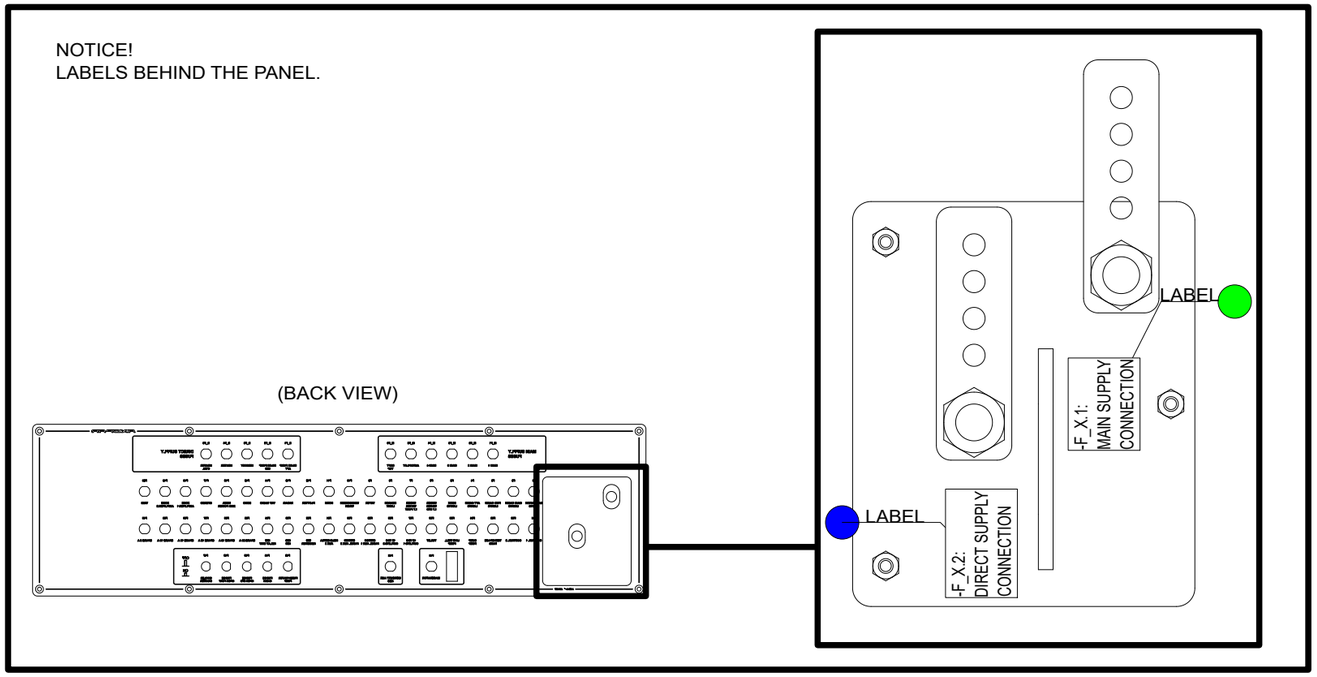

23.11.2023	PF	F10: 2004954; Changed livewell fuse to 3A	Date	24.4.2020	NAVIX designed solutions	Axopar	SEE EXP VIEW	30811
13.4.2024	PF	G11: 2005054; F47 10A->16A, F3 15A->10A	Drawing by	TuM		Boat	Sub-product code	Product code / Project ID
17.2.2023	RK	F9: -F18 NOW USED FOR WETBAR LT	Sheet rev.	11		37 MY20 SHADOW	FUSE UNIT	HL
Date of modification	Modified by	Description	Project rev.	G	Copyright by	Boat model	Title	Loc / 175 / 210 Sheet

30811_AXOPAR_37_MY_20_SHADOW_FUSE_UNIT

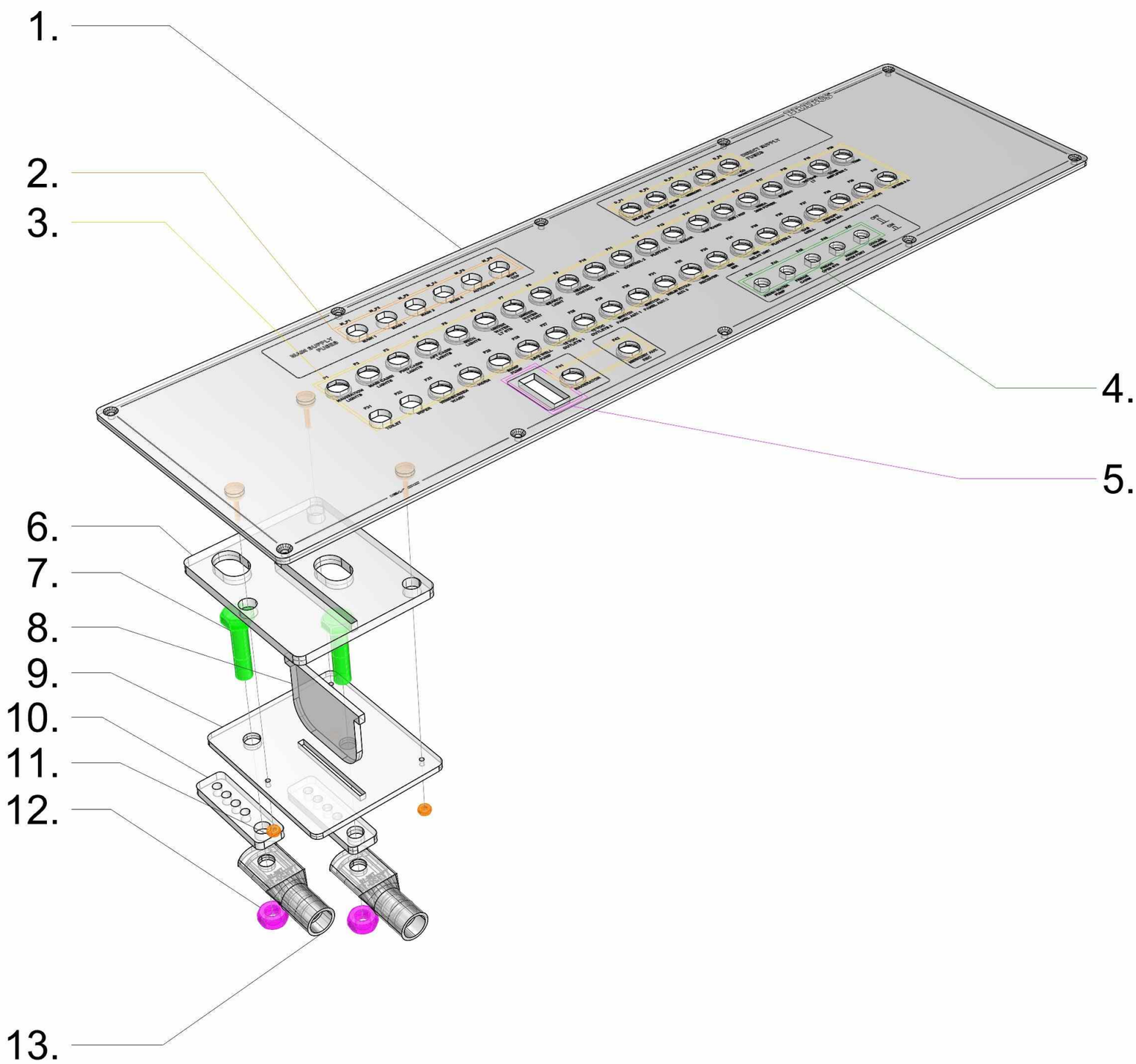

30811_AXOPAR_37_MY_20_SHADOW_FUSE_UNIT

1. 1PC 31116_AXOPAR_37_MY_20_SHADOW_FUSE_UNIT_PANEL_(WOC)_V6
2. 6PCs KUOYUH_98H_SERIES
3. 47PCS KUOYUH_98_SERIES
4. 5PCS ETA 1140 FUSE
5. 1PC ARCOLECTRIC_15...B_33.4X14.0
6. 1PC 29918_AXOPAR_37_MY20_FUSE_UNIT_MS_DC_BTM_PANEL_(WOC)
7. 2PCS M10 L40
8. 1PC 29920_AXOPAR_37_MY20_FUSE_UNIT_MS_DC_SPACER_PANEL_(WOC)
9. 1PC 29919_AXOPAR_37_MY20_FUSE_UNIT_MS_DC_TOP_PANEL_(WOC)
10. 2PCS 30167_NAVIX_LINE_VIRTAKISKO_FOUR_SPOT_SMALL
11. 3PCS M4 NUT A4
12. 2PCS M10 SPRING WASHER
 2PCS M10 NUT A4
13. 2PCS CABLE SHOES (AS IN DIAGRAM)

TE 30.10.2019
TS 21.06.2021

EXP VIEW

Date of modification	Modified by	Description
23.11.2023	PF	F10: 2004954; Changed livewell fuse to 3A
13.4.2024	PF	G11: 2005054; F47 10A->16A, F3 15A->10A
17.2.2023	RK	F9: -F18 NOW USED FOR WETBAR LT

Date	24.4.2020
Drawing by	TuM
Sheet rev.	11
Project rev.	G

NAVIX designed solutions

Boat	Axopar
Boat model	37 MY20 SHADOW
Sub-product code	SEE EXP VIEW
Product code	30811
Title	FUSE UNIT
HL	
Loc	
Project ID	
Sheet	176 / 210

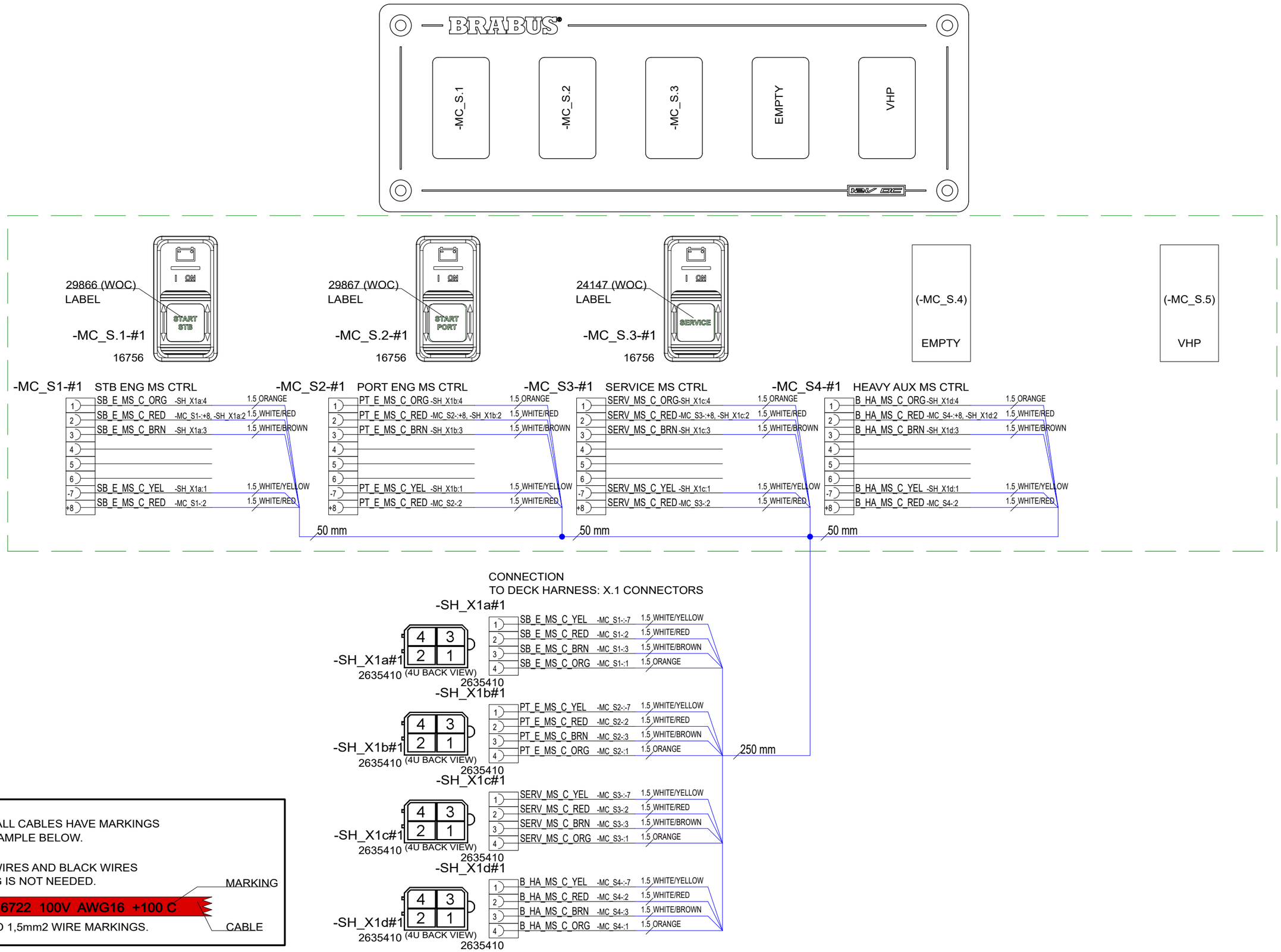

NOTICE!
VERIFY THAT ALL CABLES HAVE MARKINGS
SHOWN IN EXAMPLE BELOW.
EXEMPTION:
ALL <500mm WIRES AND BLACK WIRES
THIS MARKING IS NOT NEEDED.

MARKING

R2 ISO 6722 100V AWG16 +100 C

CABLE

EXAMPLE: RED 1,5mm2 WIRE MARKINGS.

Date of modification	Modified by	Description
19.4.2024	PF	G4: 2005054; Not modified
22.9.2021	VV	E4: NOT MODIFIED / REVISION RETURNED TO REV. E.
17.2.2023	RK	F4: NOT MODIFIED.

Date	6.11.2019
Drawing by	TuM
Sheet rev.	4
Project rev.	G

NAVIX designed solutions
Copyright by

Axopar Boat	31120 Sub-product code	30812 Product code	Project ID
37 MY20 SHADOW Boat model	MAIN SWITCH CONTROL PANEL Title	HL Loc	177 / 210 Sheet

NOTICE! CABLES WITH STICKER

FOR EXAMPLE

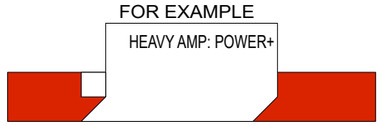

LABEL

POWER STEER 1. CABLES

(TO TOP OF PACKAGE)

OPTION 1.
-TWIN ENGINE ONE STEERING PUMP

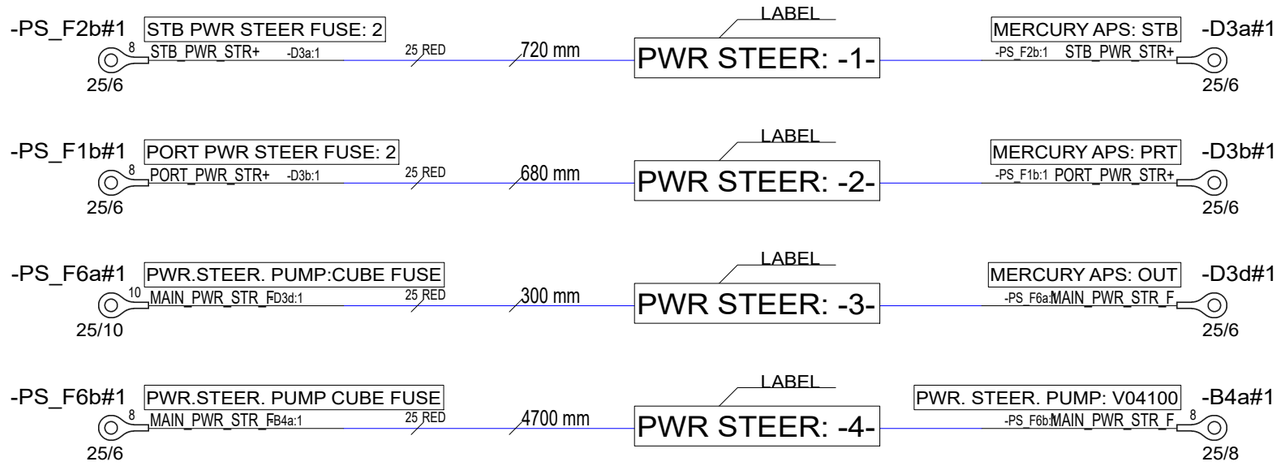

PACKED TO OWN PACKAGE.

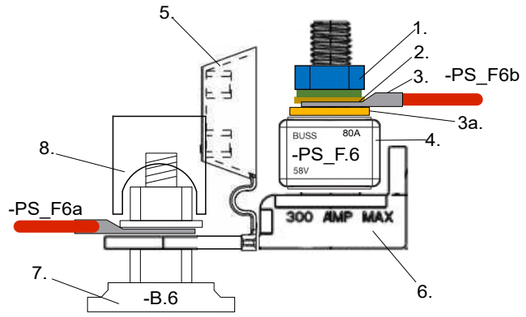

TERMINAL FUSE BLOCK

1. VMI36860 HEX NUT 1/4" "UNC A4
2. VMI31830 SPRING LOCK WASHER M6 DIN127
3. VMI31831 FLAT WASHER FOR hex BOLTS AND NUTS M6 DIN125A

3a. VMI36859 WIDE FLAT WASHER FOR HEX BOLT AND NUTS M6 A4 DIN9021

4. 34640 -PS_F.6 CUBE FUSE MRFB-080 80A
5. 34641 -B.6 CFCOVER-1R SINGLE STUD/RED
6. 34642 CFBAR1-250SP SINGLE STUD
7. 36213 POWER DISTRIBUTION STUD IS-10mm-1R
8. 31588 INSULATED COVER POSITIVE RED ISC-10R

NOTICE!
BATTERY CABLES NEED TO ADD MARKINGS
SHOWN IN EXAMPLE BELOW.

EXEMPTION:
ALL BLACK WIRES
THIS MARKING IS NOT NEEDED.

MARKING

R2 ISO 6722 100V AWG6 +100 C

CABLE

EXAMPLE: RED 16mm2 WIRE MARKINGS.

MARKING SHOWN ABOVE ONLY TO CABLES LISTED BELOW.

LOOK FOR EQUIVALENT AWG SIZE FOR mm2
AND ADD THIS TO CABLE MARKINGS.

FOR EXAMPLE:
CABLE SIZE IS 25mm2 --> MARKING AWG3.

EQUIVALENCY:

mm2		AWG
10 mm2	=	AWG8
16 mm2	=	AWG6
25 mm2	=	AWG3
35 mm2	=	AWG2

Date of modification	Modified by	Description
17.2.2023	RK	F3: NOT MODIFIED.
19.4.2024	PF	G3: 2005054; Not modified
1.12.2021	PN	E3: ADDED -PS_F.6, B.6, FUSE HOLDER & CABLE -PS_F6a_-D3d

Date	5.7.2019
Drawing by	TuM
Sheet rev.	3
Project rev.	G

NAVIX designed solutions
Copyright by

Axopar Boat	Sub-product code	30880 Product code	Project ID
37 MY20 Boat model	POWER STEERING CABLES 1xPUMP Title	HL Loc	178 / 210 Sheet

NOTICE! CABLES WITH STICKER

FOR EXAMPLE

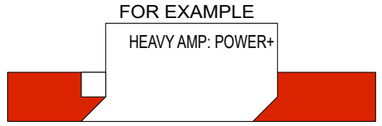

LABEL

POWER STEER 2. CABLES

(TO TOP OF PACKAGE)

OPTION 2.
-TWIN EMGINE, TWIN STEERING PUMP

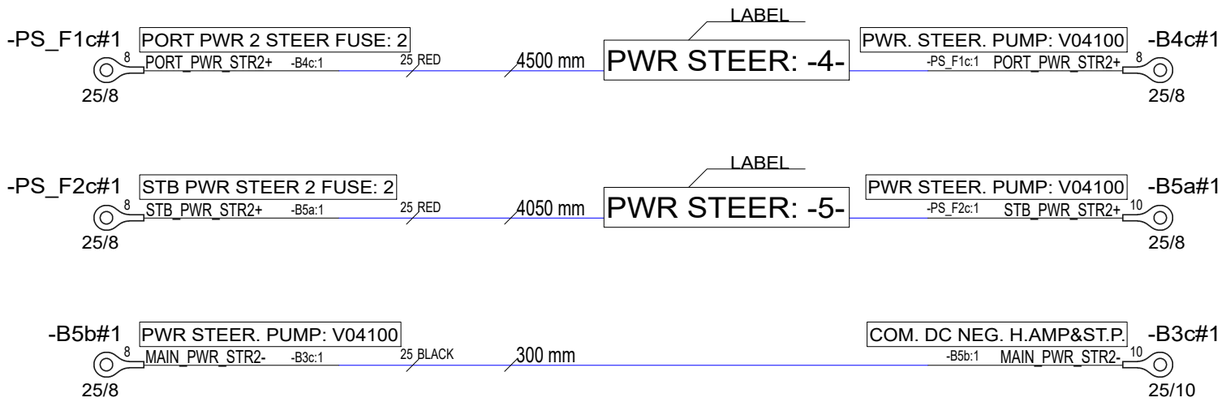

INCLUDED

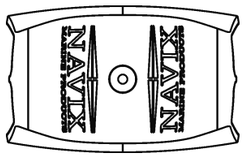

-B.5#1

V4100

PACKED TO OWN PACKAGE.

NOTICE!
BATTERY CABLES NEED TO ADD MARKINGS
SHOWN IN EXAMPLE BELOW.

EXEMPTION:
ALL BLACK WIRES
THIS MARKING IS NOT NEEDED.

MARKING

R2 ISO 6722 100V AWG6 +100 C

CABLE

EXAMPLE: RED 16mm2 WIRE MARKINGS.

MARKING SHOWN ABOVE ONLY TO CABLES LISTED BELOW.

LOOK FOR EQUIVALENT AWG SIZE FOR mm2
AND ADD THIS TO CABLE MARKINGS.

FOR EXAMPLE:
CABLE SIZE IS 25mm2 --> MARKING AWG3.

EQUIVALENCY:

mm2		AWG
10 mm2	=	AWG8
16 mm2	=	AWG6
25 mm2	=	AWG3
35 mm2	=	AWG2

Date of modification	Modified by	Description
19.4.2024	PF	G3: 2005054; Not modified
22.9.2021	VV	E3: NOT MODIFIED / REVISION RETURNED TO REV. E.
17.2.2023	RK	F3: NOT MODIFIED.

Date	5.7.2019
Drawing by	TuM
Sheet rev.	3
Project rev.	G

NAVIX designed solutions
Copyright by

Axopar Boat	Sub-product code	30881 Product code	Project ID
37 MY20 Boat model	POWER STEERING CABLES 2xPUMP Title	HL Loc	179 / 210 Sheet

NOTICE!
VERIFY THAT ALL CABLES HAVE MARKINGS
SHOWN IN EXAMPLE BELOW.

EXEMPTION:
ALL <500mm WIRES AND BLACK WIRES
THIS MARKING IS NOT NEEDED.

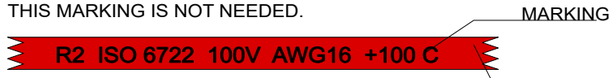

EXAMPLE: RED 1,5mm2 WIRE MARKINGS.

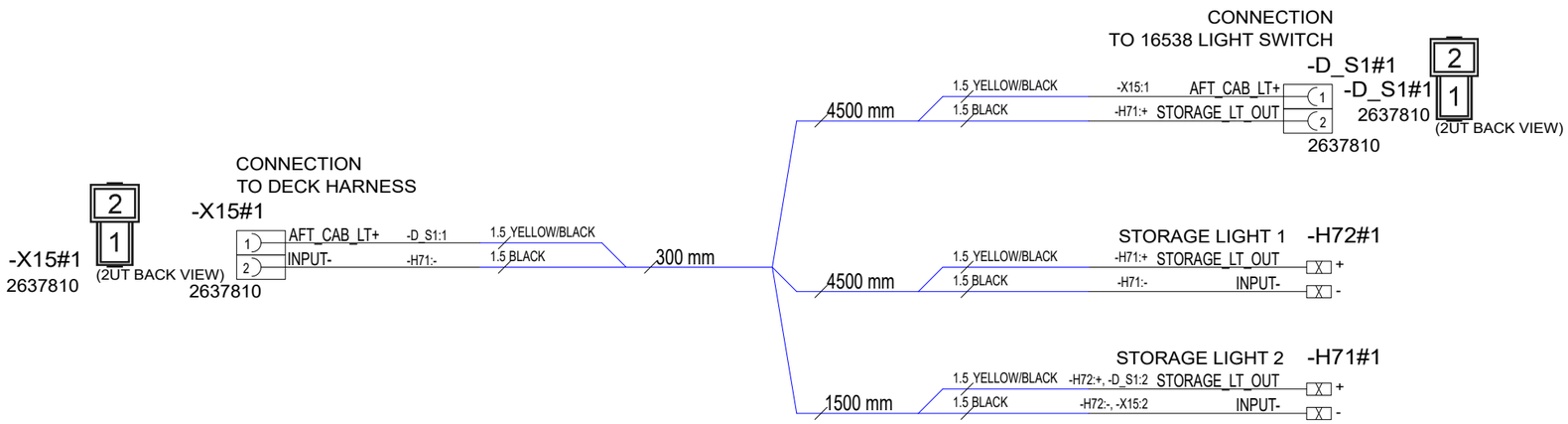

22.9.2021	VV	E2: NOT MODIFIED / REVISION RETURNED TO REV. E.	Date 2.4.2020	NAVIX designed solutions	Axopar		32118	
17.2.2023	RK	F2: NOT MODIFIED.	Drawing by TuM		Boat	Sub-product code	Product code	Project ID
19.4.2024	PF	G2: 2005054; Not modified	Sheet rev. 2		37 MY20	MULTISTORAGE LT HARNESS	HL	180 / 210
Date of modification	Modified by	Description	Project rev. G	Copyright by	Boat model	Title	Loc	Sheet

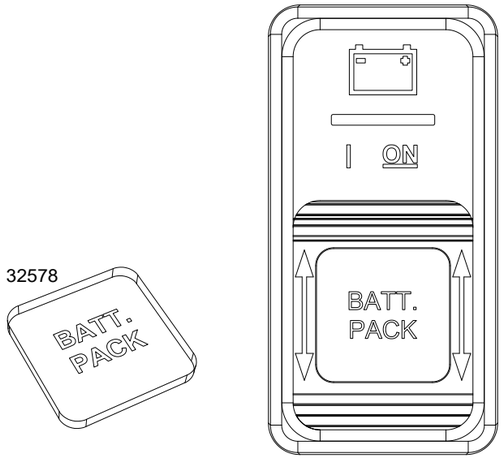

32578 NAVIX LINE BATT.BACK LABEL FOR 16756 SPDT V1
16756 Switch Contura SPDT (ON)OFF(ON) RG Blue Sea 2145B

NOTICE! WITHOUT THE WIRING HARNESS!

INCLUDED

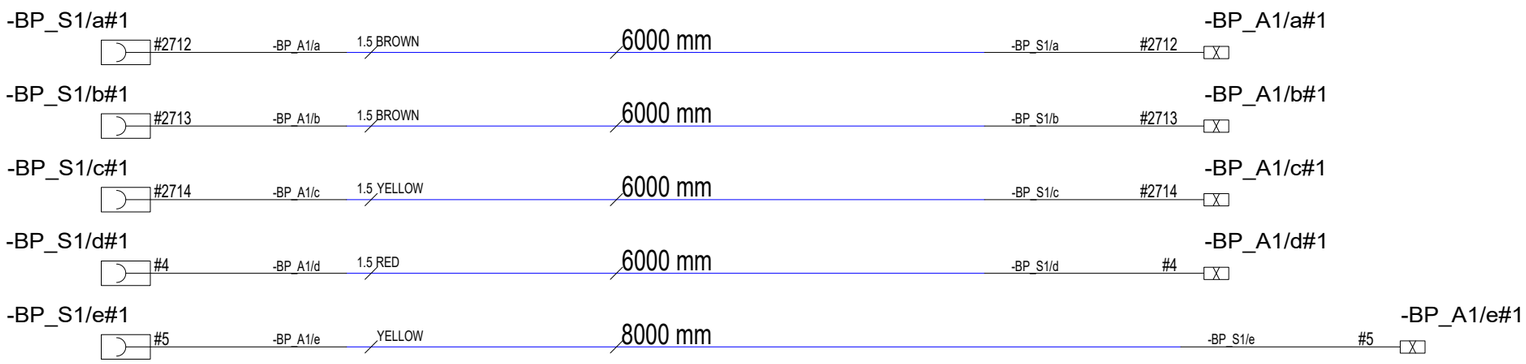

22.9.2021	VV	E3: NOT MODIFIED / REVISION RETURNED TO REV. E.	Date	15.04.2021	NAVIX designed solutions	Axopar	32578	32529
17.2.2023	RK	F3: NOT MODIFIED.	Drawing by	AR		Boat	Sub-product code	Product code
19.4.2024	PF	G3: 2005054; Not modified	Sheet rev.	3		37 MY20 SHADOW	BATT.PACK MAIN SWITCH PANEL	HL
Date of modification	Modified by	Description	Project rev.	G	Copyright by	Boat model	Title	Loc

Project ID

181/ 210
Sheet

NOTICE!
BATTERY CABLES NEED TO ADD MARKINGS
SHOWN IN EXAMPLE BELOW.

EXEMPTION:
ALL BLACK WIRES
THIS MARKING IS NOT NEEDED.

MARKING

R2 ISO 6722 100V AWG6 +100 C

CABLE

EXAMPLE: RED 16mm2 WIRE MARKINGS.

MARKING SHOWN ABOVE ONLY TO CABLES LISTED BELOW.

LOOK FOR EQUIVALENT AWG SIZE FOR mm2
AND ADD THIS TO CABLE MARKINGS.

FOR EXAMPLE:
CABLE SIZE IS 25mm2 --> MARKING AWG3.

EQUIVALENCY:

mm2		AWG
10 mm2	=	AWG8
16 mm2	=	AWG6
25 mm2	=	AWG3
35 mm2	=	AWG2

NOTICE! CABLES WITH STICKER

FOR EXAMPLE

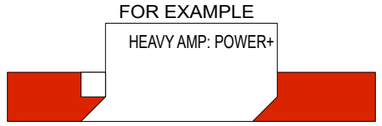

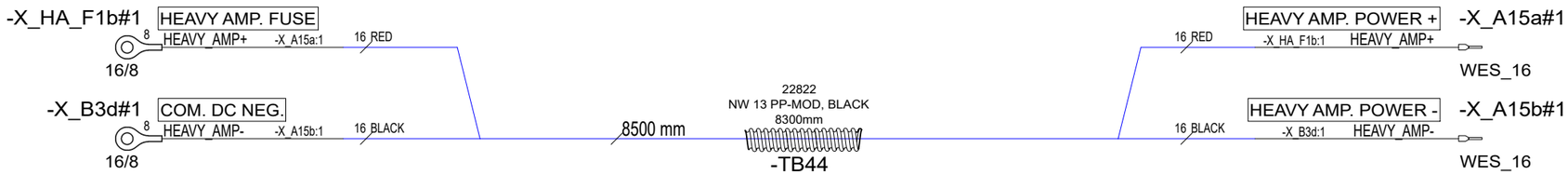

Date of modification	Modified by	Description
17.2.2023	RK	F2: NOT MODIFIED.
19.4.2024	PF	G2: 2005054; Not modified
22.9.2021	VV	E2: NOT MODIFIED / REVISION RETURNED TO REV. E.

Date	5.11.2020
Drawing by	TT
Sheet rev.	2
Project rev.	G

NAVIX designed solutions
Copyright by

Axopar		33378	
Boat	Sub-product code	Product code	Project ID
37 MY20	AMPLIFER POWER CABLE	HL	182 / 210
Boat model	Title	Loc	Sheet

NOTICE!
VERIFY THAT ALL CABLES HAVE MARKINGS
SHOWN IN EXAMPLE BELOW.

EXEMPTION:
ALL <500mm WIRES AND BLACK WIRES
THIS MARKING IS NOT NEEDED.

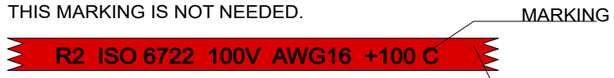

EXAMPLE: RED 1,5mm2 WIRE MARKINGS.

SPLIT TUBE IF NECESSARY

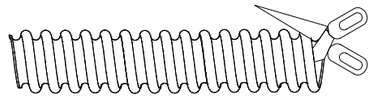

TAPE SPLITTED TUBE EVERY 200 mm

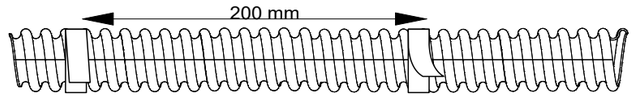

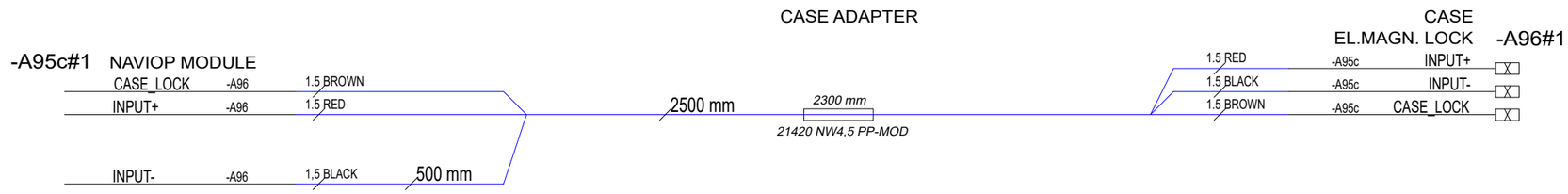

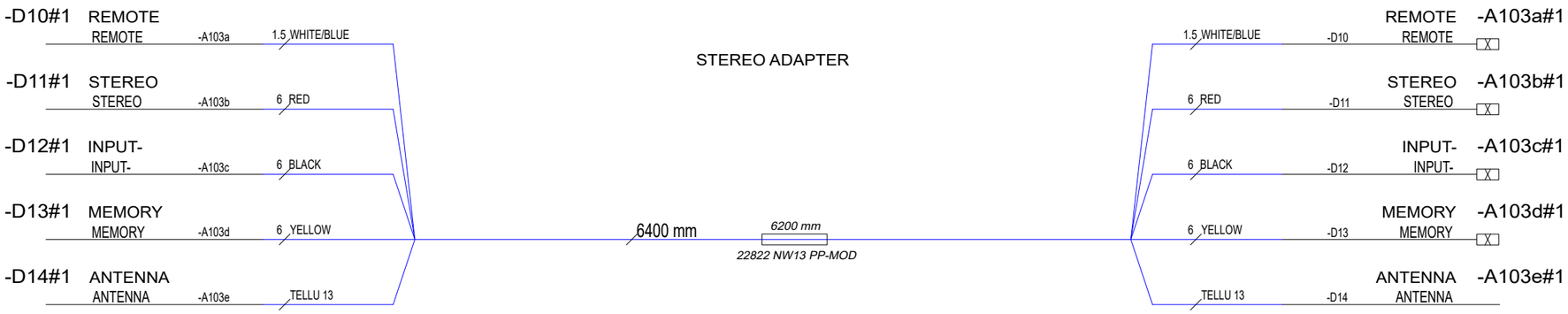

17.2.2023	RK	F2: NOT MODIFIED.	Date	5.11.2020	NAVIX designed solutions	Axopar		33379	
19.4.2024	PF	G2: 2005054; Not modified	Drawing by	TT		Boat	Sub-product code	Product code	Project ID
22.9.2021	VV	E2: NOT MODIFIED / REVISION RETURNED TO REV. E.	Sheet rev.	2		37 MY20 SHADOW	CASE+STEREO+ FR CAB. FL LT	HL	183 / 210
Date of modification	Modified by	Description	Project rev.	G	Copyright by	Boat model	Title	Loc	Sheet

NOTICE!
VERIFY THAT ALL CABLES HAVE MARKINGS
SHOWN IN EXAMPLE BELOW.

EXEMPTION:
ALL <500mm WIRES AND BLACK WIRES
THIS MARKING IS NOT NEEDED.

MARKING

R2 ISO 6722 100V AWG16 +100 C

CABLE

EXAMPLE: RED 1,5mm2 WIRE MARKINGS.

SPLIT TUBE IF NECESSARY

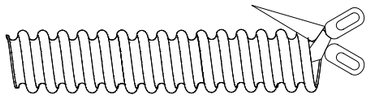

TAPE SPLITTED TUBE EVERY 200 mm

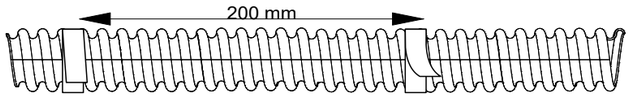

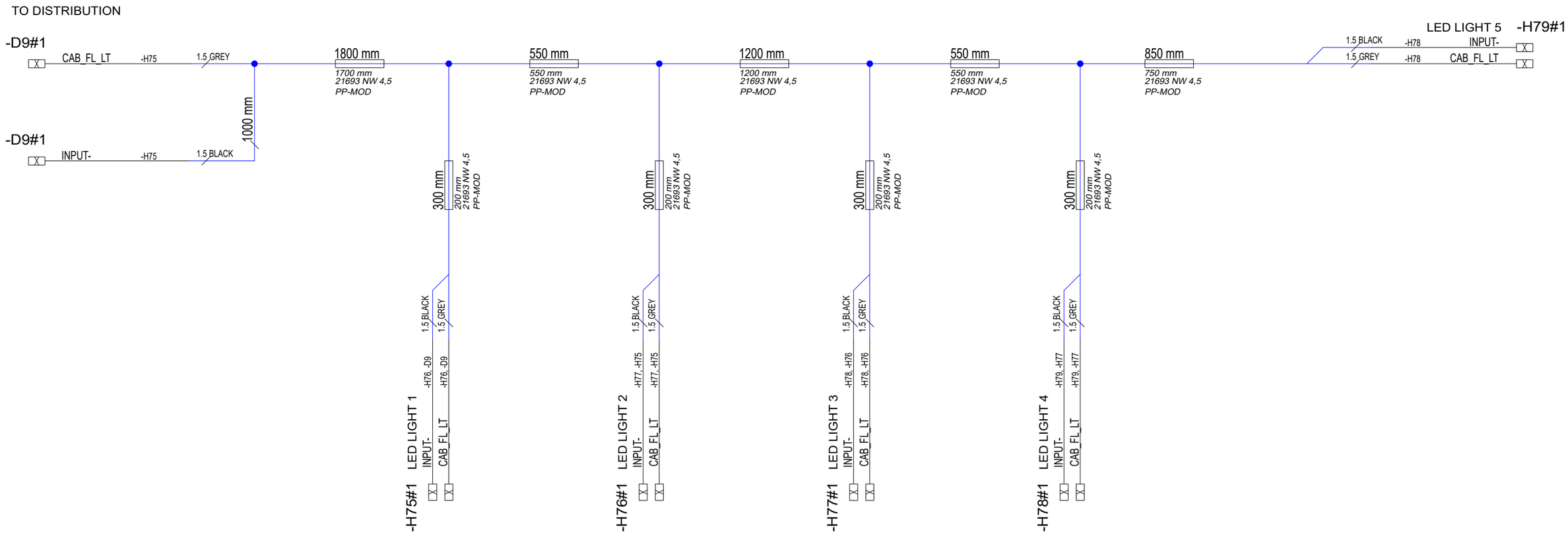

17.2.2023	RK	F2: NOT MODIFIED.	Date	5.11.2020	NAVIX designed solutions	Axopar		33379	
19.4.2024	PF	G2: 2005054; Not modified	Drawing by	TT		Boat	Sub-product code	Product code	Project ID
22.9.2021	VV	E2: NOT MODIFIED / REVISION RETURNED TO REV. E.	Sheet rev.	2		37 MY20 SHADOW	CASE+STEREO+ FR CAB. FL LT	HL	184 / 210
Date of modification	Modified by	Description	Project rev.	G	Copyright by	Boat model	Title	Loc	Sheet

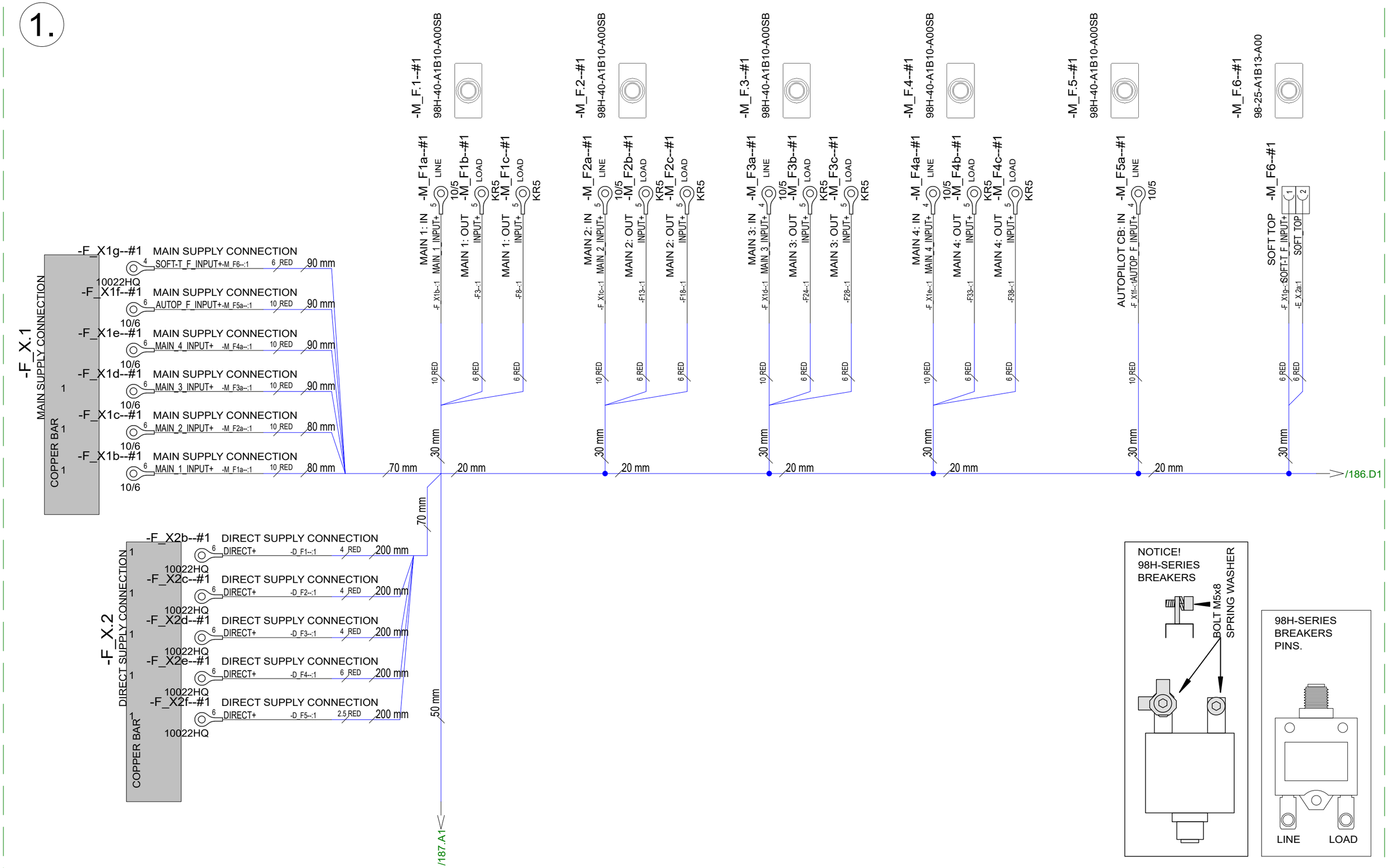

17.2.2023	RK	F3: -F18 IS NOW IN USE FOR WETBAR LT	Date	21.05.2021	NAVIX designed solutions	Axopar	SEE EXP VIEW	34828
23.11.2023	PF	F4: 2004954; Changed livewell fuse to 3A	Drawing by	TT		Boat	Sub-product code	Product code / Project ID
13.4.2024	PF	G5: 2005054; F47 10A->16A, F3 15A->10A	Sheet rev.	5		37 MY20 SHADOW	FUSE UNIT EU	HL
Date of modification	Modified by	Description	Project rev.	G	Copyright by	Boat model	Title	Loc / 185 / 210 Sheet

2.

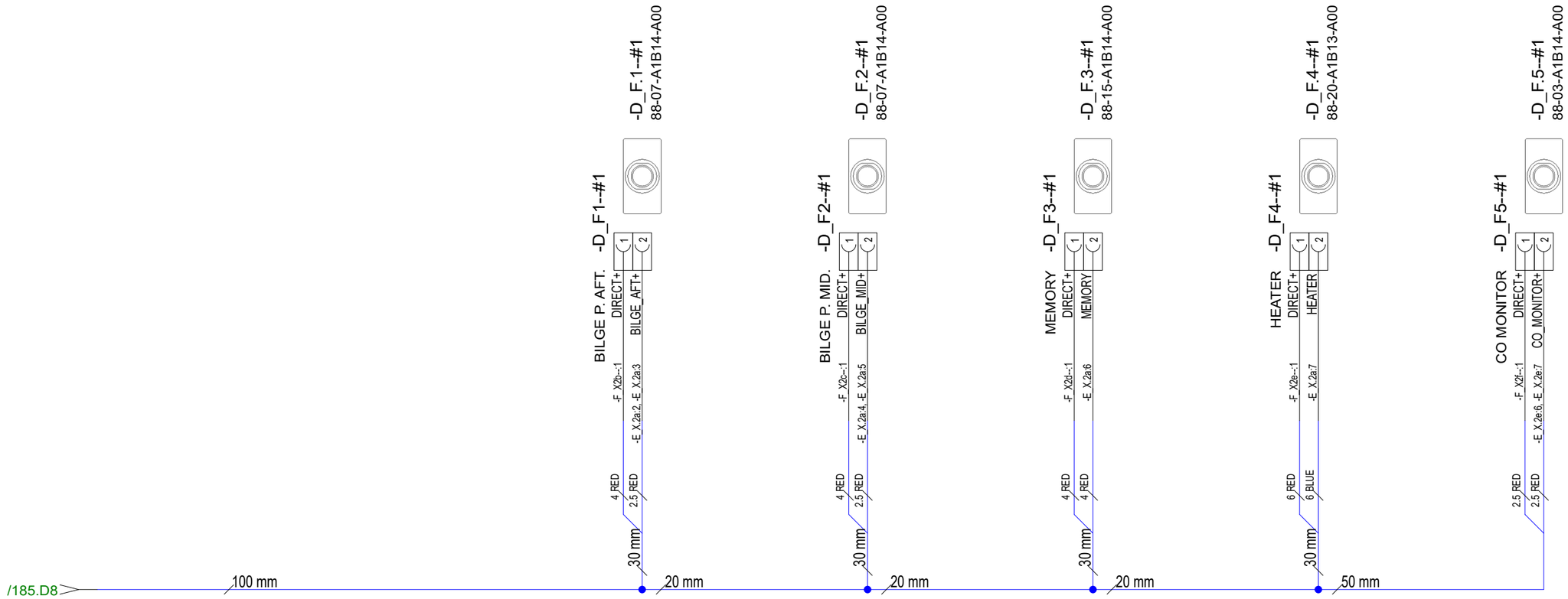

17.2.2023	RK	F3: -F18 IS NOW IN USE FOR WETBAR LT	Date	21.05.2021	NAVIX designed solutions	Axopar	SEE EXP VIEW	34828
23.11.2023	PF	F4: 2004954; Changed livewell fuse to 3A	Drawing by	TT		Boat	Sub-product code	Product code
13.4.2024	PF	G5: 2005054; F47 10A->16A, F3 15A->10A	Sheet rev.	5		37 MY20 SHADOW	FUSE UNIT EU	HL
Date of modification	Modified by	Description	Project rev.	G	Copyright by	Boat model	Title	Loc

Project ID

186 / 210
Sheet

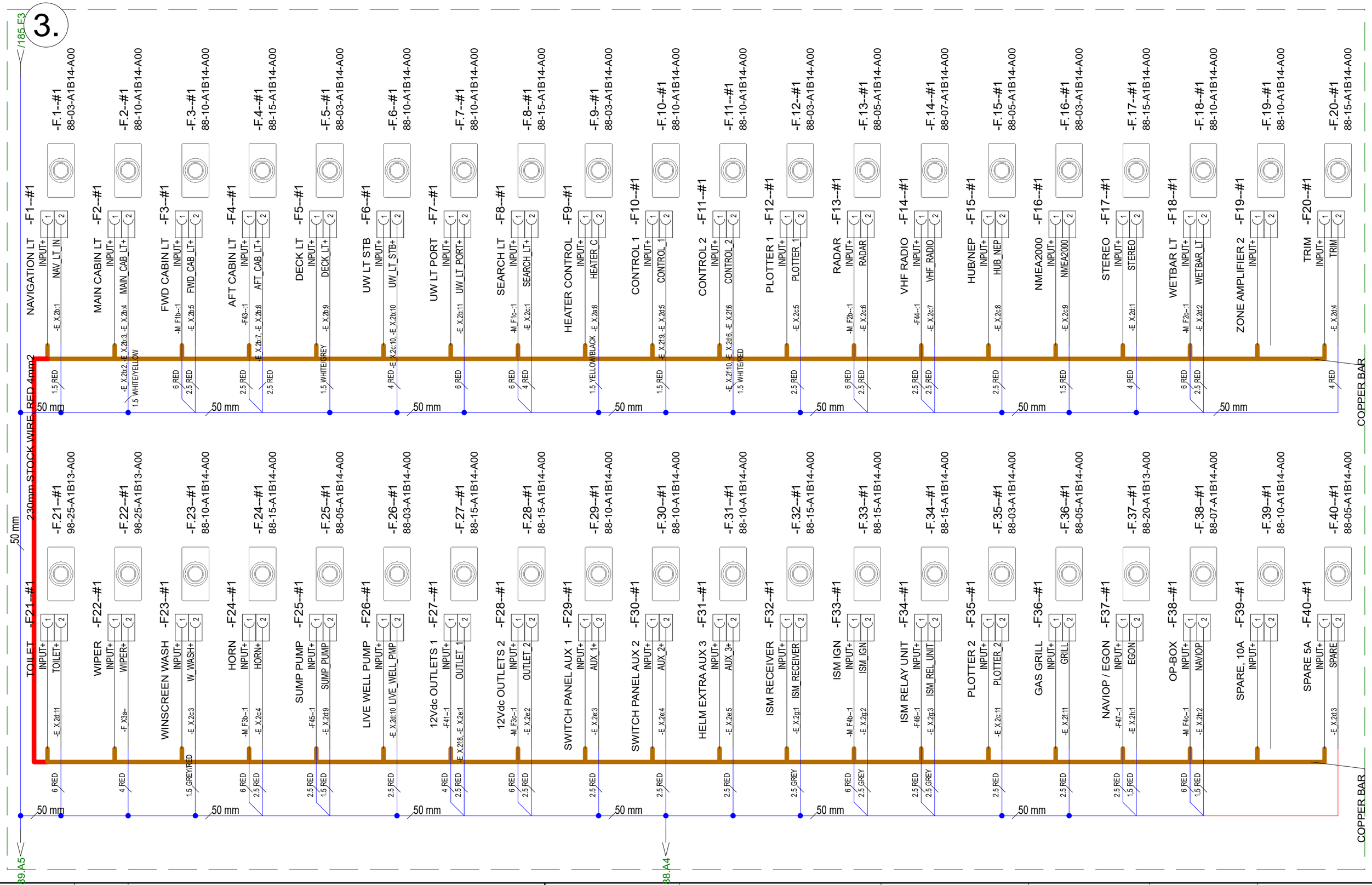

17.2.2023	RK	F3: -F18 IS NOW IN USE FOR WETBAR LT	Date 21.05.2021	NAVIX designed solutions	Axopar	SEE EXP VIEW	34828
23.11.2023	PF	F4: 2004954; Changed livewell fuse to 3A	Drawing by TT		Boat	Sub-product code	Product code / Project ID
13.4.2024	PF	G5: 2005054; F47 10A->16A, F3 15A->10A	Sheet rev. 5		37 MY20 SHADOW	FUSE UNIT EU	HL
Date of modification	Modified by	Description	Project rev. G	Copyright by	Boat model	Title	Loc / Sheet 187 / 210

4.

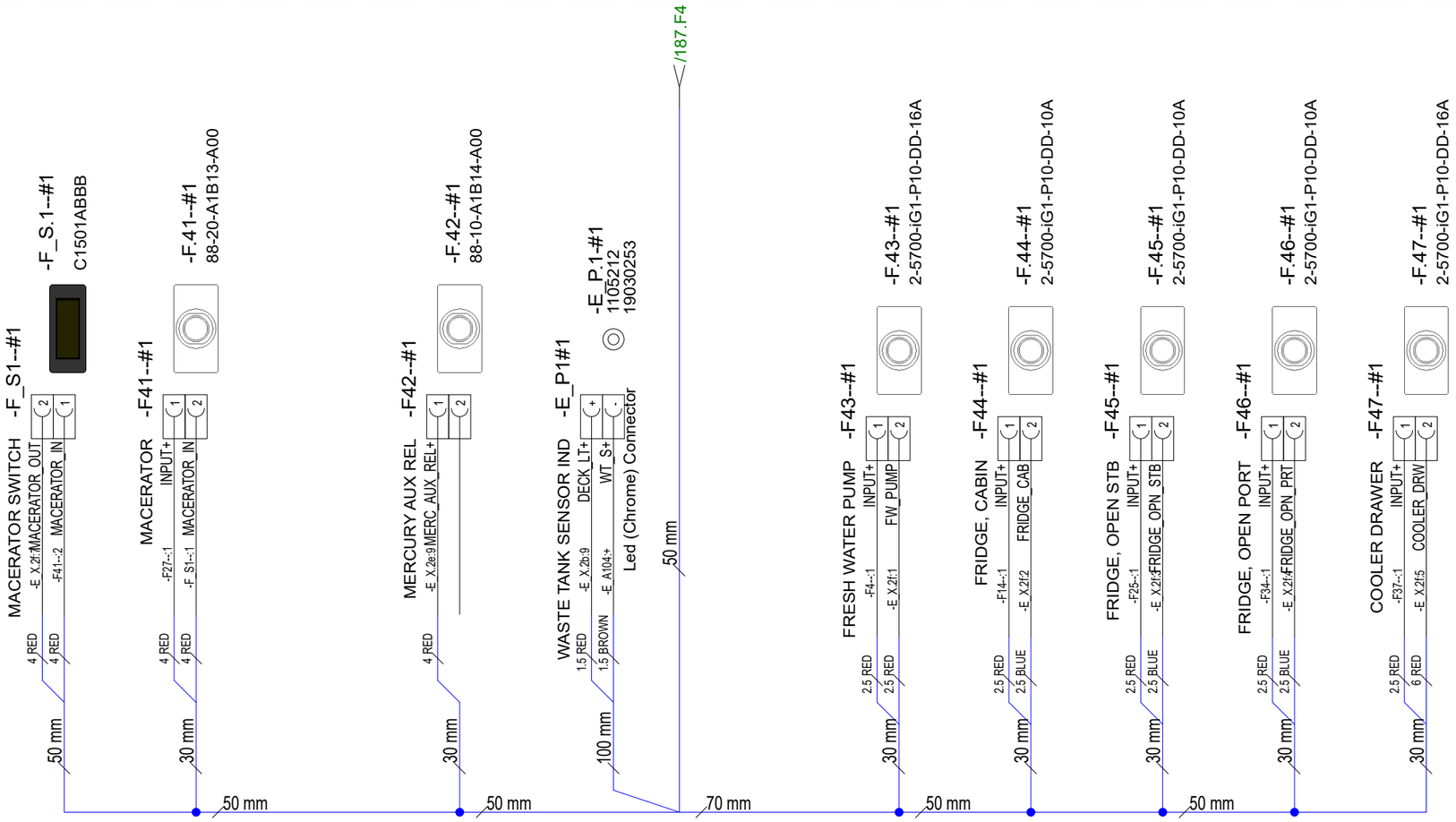

17.2.2023	RK	F3: -F18 IS NOW IN USE FOR WETBAR LT	Date 21.05.2021	NAVIX designed solutions	Axopar	SEE EXP VIEW	34828	
23.11.2023	PF	F4: 2004954; Changed livewell fuse to 3A	Drawing by TT		Boat	Sub-product code	Product code	Project ID
13.4.2024	PF	G5: 2005054; F47 10A->16A, F3 15A->10A	Sheet rev. 5		37 MY20 SHADOW	FUSE UNIT EU	HL	188 / 210
Date of modification	Modified by	Description	Project rev. G	Copyright by	Boat model	Title	Loc	Sheet

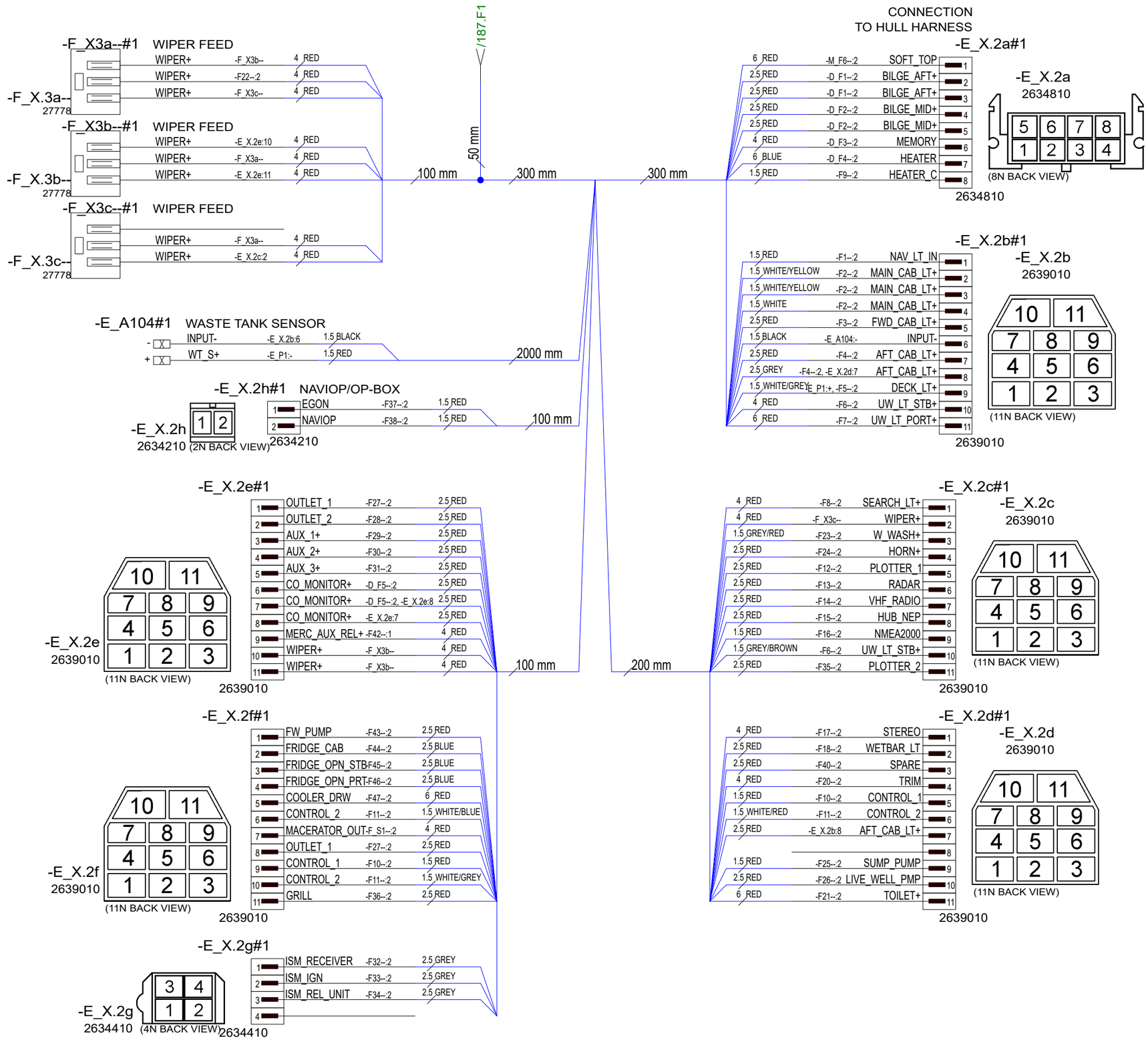

NOTICE!
VERIFY THAT ALL CABLES HAVE MARKINGS
SHOWN IN EXAMPLE BELOW.

EXEMPTION:
ALL <500mm WIRES AND BLACK WIRES
THIS MARKING IS NOT NEEDED.

MARKING

R2 ISO 6722 100V AWG16 +100 C

CABLE

EXAMPLE: RED 1,5mm2 WIRE MARKINGS.

Date of modification	Modified by	Description
17.2.2023	RK	F3: -F18 IS NOW IN USE FOR WETBAR LT
23.11.2023	PF	F4: 2004954; Changed livewell fuse to 3A
13.4.2024	PF	G5: 2005054; F47 10A->16A, F3 15A->10A

Date	21.05.2021
Drawing by	TT
Sheet rev.	5
Project rev.	G

NAVIX designed solutions
Copyright by

Axopar Boat	SEE EXP VIEW Sub-product code	34828 Product code	Project ID
37 MY20 SHADOW Boat model	FUSE UNIT EU Title	HL Loc	189 / 210 Sheet

FUSE PANEL GENERAL LAYOUT/ LABELS

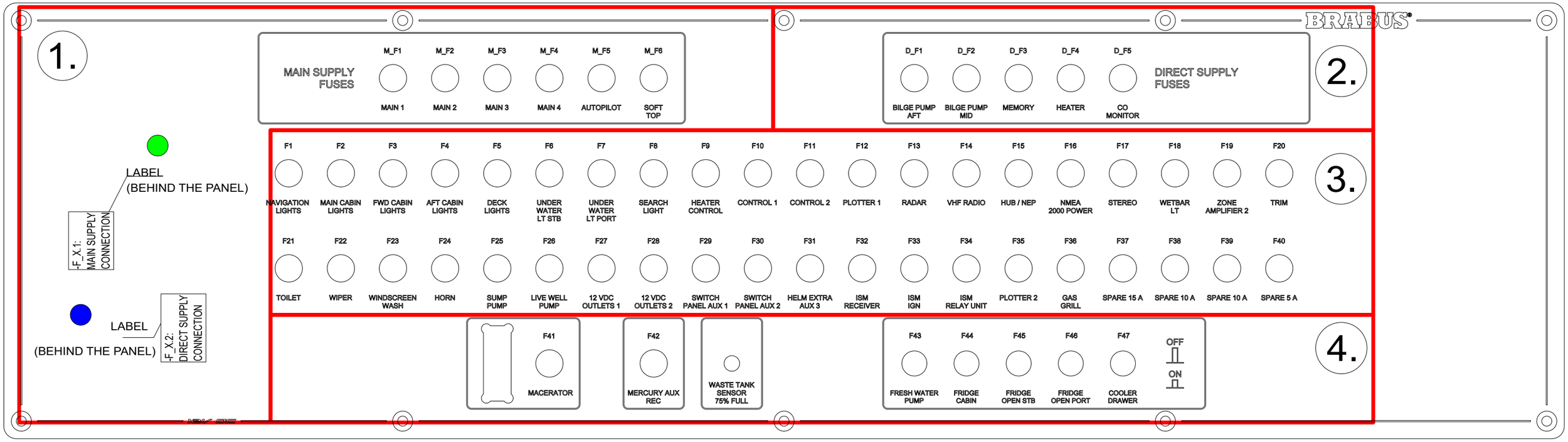

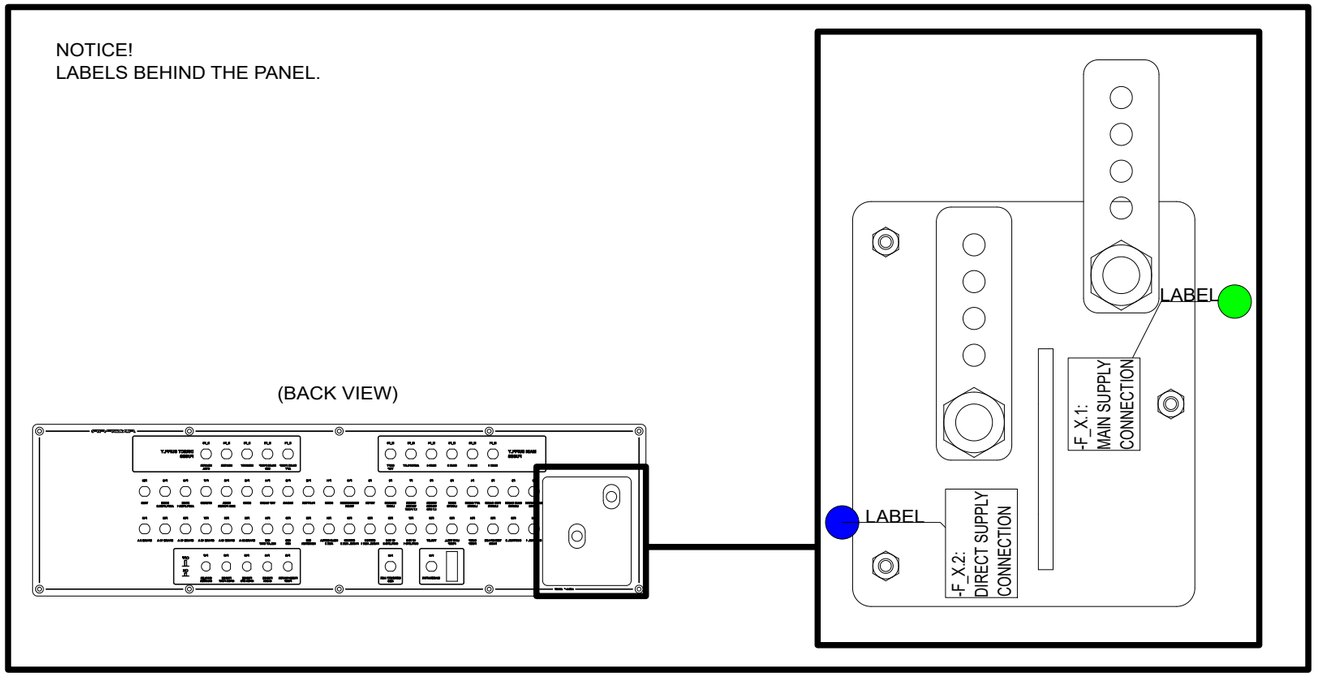

Date of modification	Modified by	Description
17.2.2023	RK	F3: -F18 IS NOW IN USE FOR WETBAR LT
23.11.2023	PF	F4: 2004954; Changed livewell fuse to 3A
13.4.2024	PF	G5: 2005054; F47 10A->16A, F3 15A->10A

Date	21.05.2021
Drawing by	TT
Sheet rev.	5
Project rev.	G

NAVIX designed solutions
Copyright by

Axopar Boat	SEE EXP VIEW Sub-product code	34828 Product code	Project ID
37 MY20 SHADOW Boat model	FUSE UNIT EU Title	HL Loc	190 / 210 Sheet

34828_AXOPAR_37_SHADOW_FUSE_UNIT_EU

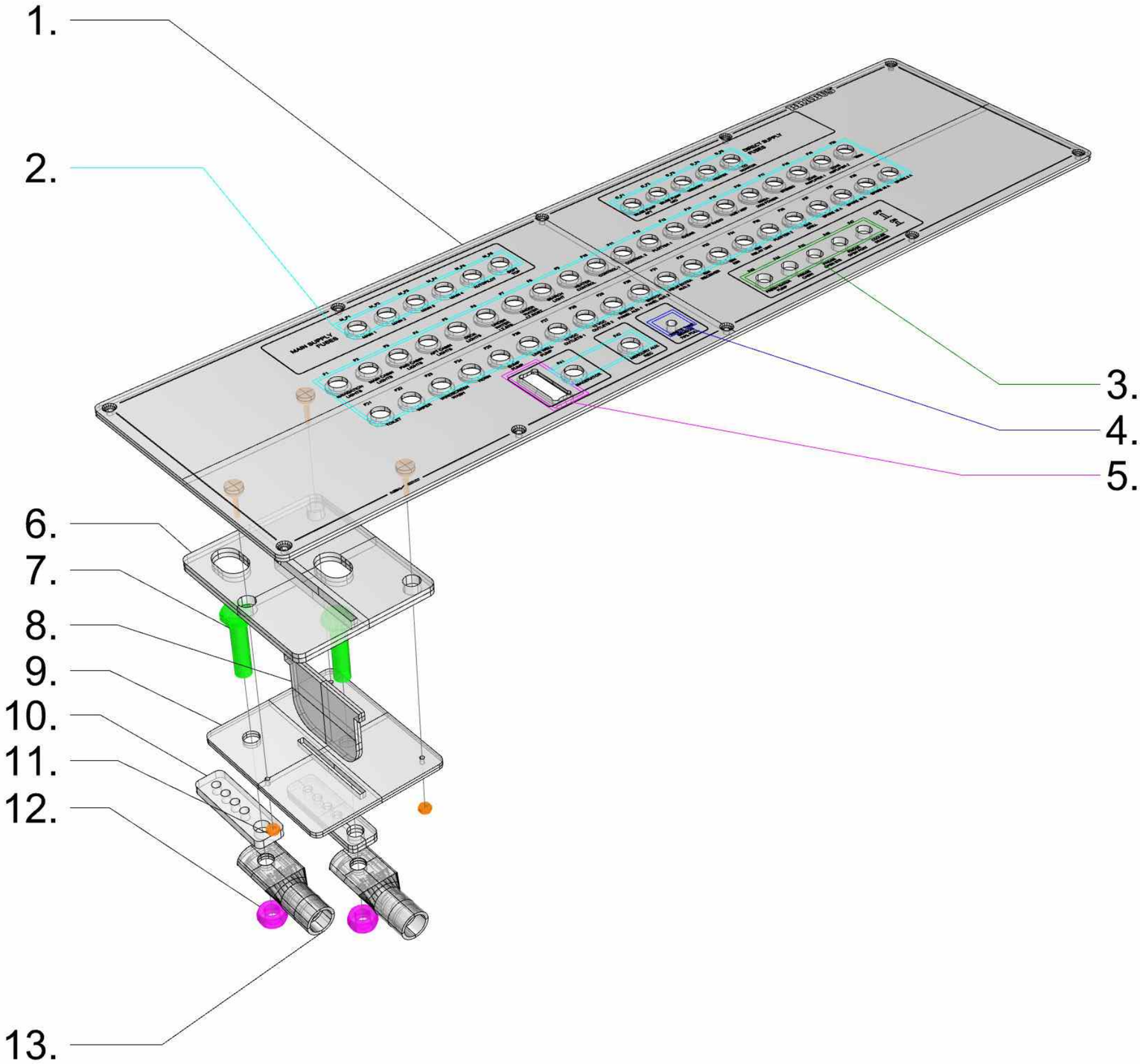

34828_AXOPAR_37_SHADOW_FUSE_UNIT_EU

1. 1PC 35001_AXOPAR_37_SHADOW_FUSE_UNIT_EU_PANEL_(WOC)
2. 53PCs KUOYUH_98H_SERIES (as in diagram)
3. 5PCS ETA 1140 FUSE
4. 1PC 19030253 LED PANEL MOUNT INDICATOR, SATIN CHROME BEZEL. RED. 12 VDC, 6mm 20mA, 13MCD, IP40
5. 1PC ARCOLECTRIC_15...B_33.4X14.0
6. 1PC 29918_AXOPAR_37_MY20_FUSE_UNIT_MS_DC_BTM_PANEL_(WOC)
7. 2PCS M10 L40
8. 1PC 29920_AXOPAR_37_MY20_FUSE_UNIT_MS_DC_SPACER_PANEL_(WOC)
9. 1PC 29919_AXOPAR_37_MY20_FUSE_UNIT_MS_DC_TOP_PANEL_(WOC)
10. 2PCS 30167_NAVIX_LINE_VIRTAKISKO_FOUR_SPOT_SMALL
11. 3PCS M4 NUT A4
12. 2PCS M10 SPRING WASHER
 2PCS M10 NUT A4
13. 2PCS CABLE SHOES (AS IN DIAGRAM)

TE 19.05.2021

EXP VIEW

Date of modification	Modified by	Description
17.2.2023	RK	F3: -F18 IS NOW IN USE FOR WETBAR LT
23.11.2023	PF	F4: 20049S4; Changed livewell fuse to 3A
13.4.2024	PF	G5: 2005054; F47 10A->16A, F3 15A->10A

Date 21.05.2021
Drawing by TT
Sheet rev. 5
Project rev. G

NAVIX designed solutions
Copyright by

Axopar
Boat
37 MY20 SHADOW
Boat model

SEE EXP VIEW
Sub-product code
FUSE UNIT EU
Title

34828
Product code
HL
Loc

Project ID

191/ 210
Sheet

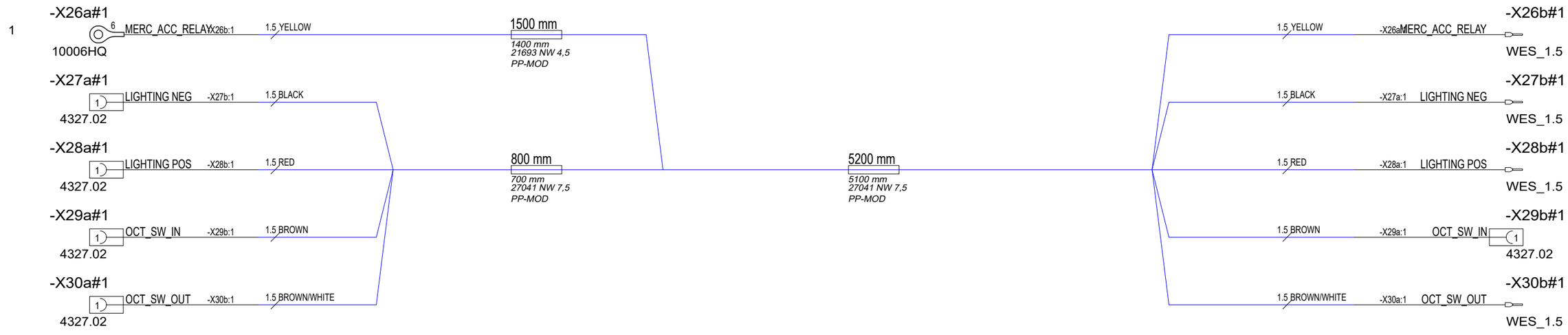

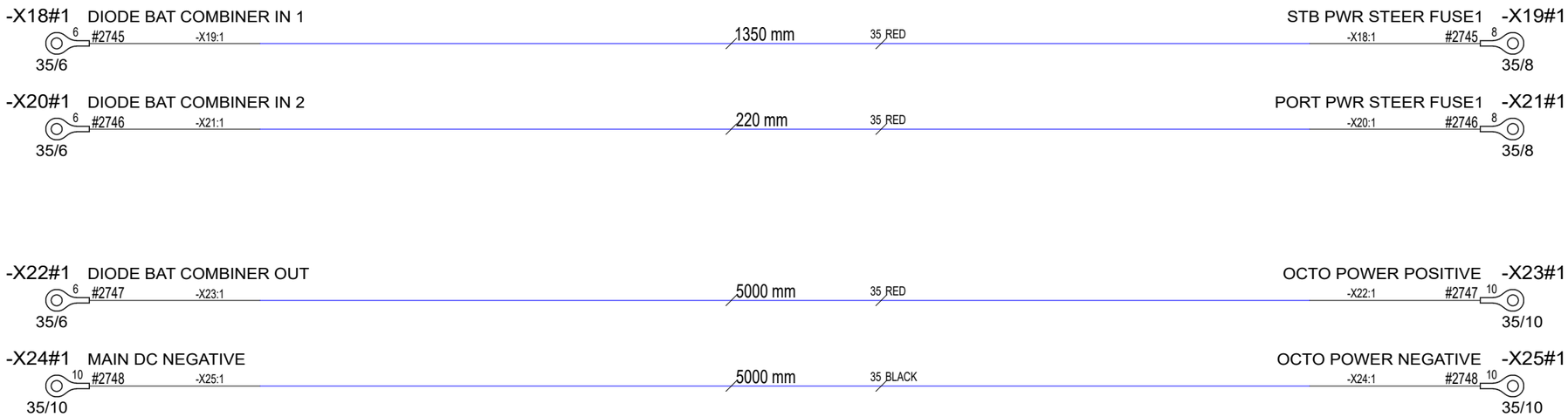

17.2.2023	RK	F1: INTRODUCED DRAWING	Date	13.2.2023	NAVIX designed solutions	Axopar Boat	38424 Product code	Project ID
19.4.2024	PF	G1: 2005054; Not modified	Drawing by	RK				
			Sheet rev.	1		37 MY20 SHADOW Boat model	OCTO POWER HARNESS Title	HL Loc
Date of modification	Modified by	Description	Project rev.	G	Copyright by			192 / 210 Sheet

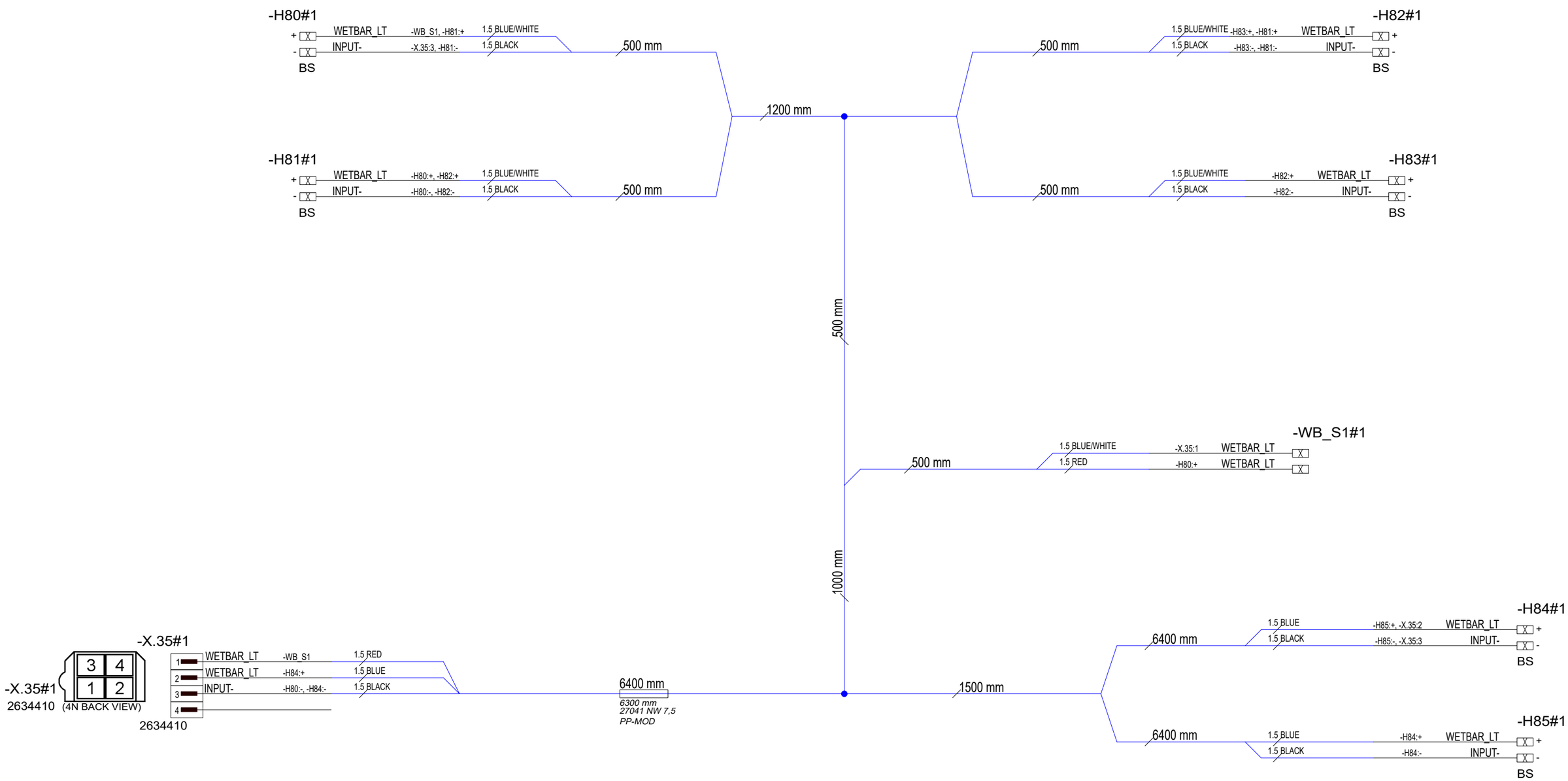

17.2.2023	RK	F1: INTRODUCED DRAWING	Date	13.2.2023	NAVIX designed solutions	Axopar		38425	
19.4.2024	PF	G1: 2005054; Not modified	Drawing by	RK		Boat	Sub-product code	Product code	Project ID
			Sheet rev.	1		37 MY20 SHADOW	WETBAR LIGHTS HARNESS	HL	193 / 210
Date of modification	Modified by	Description	Project rev.	G	Copyright by	Boat model	Title	Loc	Sheet

NOTICE!
BATTERY CABLES NEED TO ADD MARKINGS
SHOWN IN EXAMPLE BELOW.

EXEMPTION:
ALL BLACK WIRES
THIS MARKING IS NOT NEEDED.

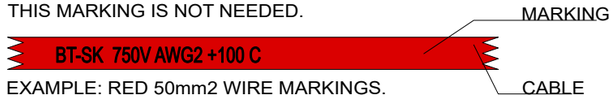

EXAMPLE: RED 50mm2 WIRE MARKINGS.

MARKING SHOWN ABOVE ONLY TO CABLES LISTED BELOW.

LOOK FOR EQUIVALENT AWG SIZE FOR mm2
AND ADD THIS TO CABLE MARKINGS.

FOR EXAMPLE:
CABLE SIZE IS 70mm2 --> MARKING AWG2/0.

EQUIVALENCY:

mm2		AWG
25 mm2	=	AWG3
35 mm2	=	AWG2
50 mm2	=	AWG0
70 mm2	=	AWG2/0
95 mm2	=	AWG3/0
120 mm2	=	250 kcmil

NOTICE! CABLES WITH STICKER

FOR EXAMPLE

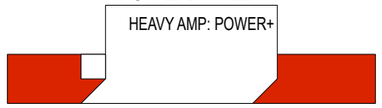

Packed as separate sets and included

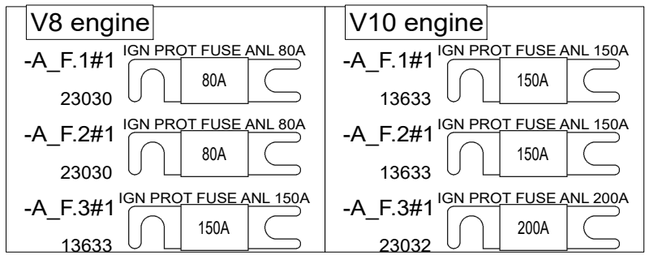

Customer installs correct fuses to
battery box according to engine type

26.9.2023	PF	E1: 2004855: Introduced drawing (Based on 29600)	Date 22.5.2019	NAVIX designed solutions	Axopar		39902	
13.10.2023	PF	F1: Import to F-revision	Drawing by TuM		Boat	Sub-product code	Product code	Project ID
19.4.2024	PF	G1: 2005054; Not modified	Sheet rev. 1		37 MY20	ALTERNATOR CABLES V10	HL	194 / 210
Date of modification	Modified by	Description	Project rev. G	Copyright by	Boat model	Title	Loc	Sheet

NOTICE!
BATTERY CABLES NEED TO ADD MARKINGS
SHOWN IN EXAMPLE BELOW.
EXEMPTION:
ALL BLACK WIRES
THIS MARKING IS NOT NEEDED.

MARKING

RK90/115 750Vac/ 1000Vdc AWG0 GR90/115 C

CABLE

EXAMPLE: RED 50mm2 WIRE MARKINGS.

MARKING SHOWN ABOVE ONLY TO CABLES LISTED BELOW.

LOOK FOR EQUIVALENT AWG SIZE FOR mm2
AND ADD THIS TO CABLE MARKINGS.

FOR EXAMPLE:
CABLE SIZE IS 70mm2 --> MARKING AWG2/0.

EQUIVALENCY:

mm2		AWG
50 mm2	=	AWG0
70 mm2	=	AWG2/0
95 mm2	=	AWG3/0
120 mm2	=	250 kcmil

NOTICE!
BATTERY CABLES NEED TO ADD MARKINGS
SHOWN IN EXAMPLE BELOW.
EXEMPTION:
ALL BLACK WIRES
THIS MARKING IS NOT NEEDED.

MARKING

BT-SK 750V AWG2 +100 C

CABLE

EXAMPLE: RED 50mm2 WIRE MARKINGS.

MARKING SHOWN ABOVE ONLY TO CABLES LISTED BELOW.

LOOK FOR EQUIVALENT AWG SIZE FOR mm2
AND ADD THIS TO CABLE MARKINGS.

FOR EXAMPLE:
CABLE SIZE IS 70mm2 --> MARKING AWG2/0.

EQUIVALENCY:

mm2		AWG
25 mm2	=	AWG3
35 mm2	=	AWG2
50 mm2	=	AWG0
70 mm2	=	AWG2/0
95 mm2	=	AWG3/0
120 mm2	=	250 kcmil

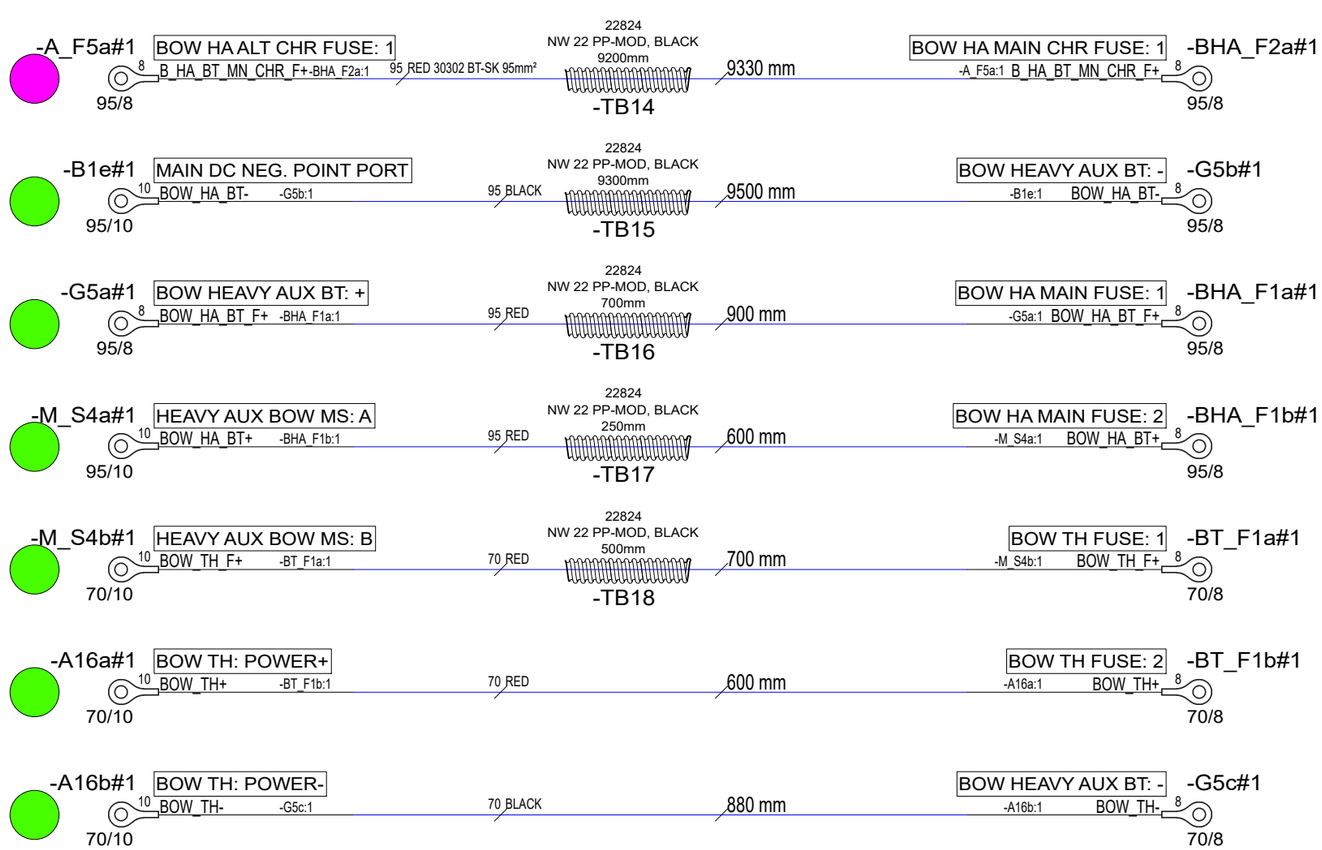

NOTICE! CABLES WITH STICKER

FOR EXAMPLE

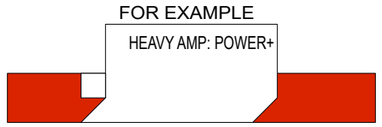

INCLUDED

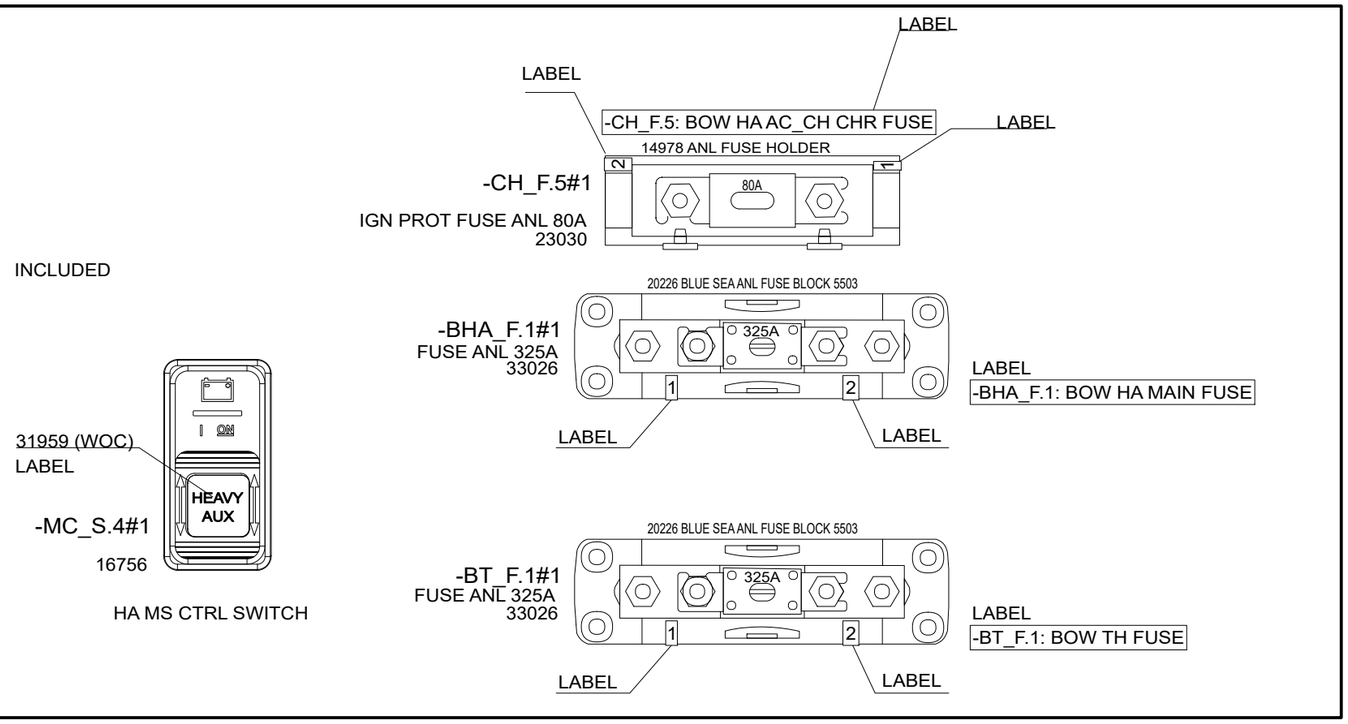

LABEL INSTRUCTIONS

NOTICE! PUT LABELS TO FUSE HOLDER
BASE - NOT TO COVER.

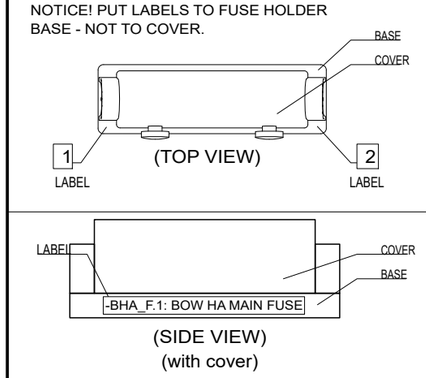

Packed as separately and included

V8 engine

-A_F.5#1 IGN PROT FUSE ANL 150A 150A
13633

V10 engine

-A_F.5#1 IGN PROT FUSE ANL 250A 250A
20011

Customer installs correct fuses to
battery box according to engine type

Date of modification	Modified by	Description
30.7.2024	PF	G3: 2005139; Cable lug changes
13.10.2023	PF	F1: Import to F-revision
11.4.2024	PF	G2: 2005054; Isol. link rem, CH_F5 &cables added, MC_S4 label, lengths

Date	22.5.2019
Drawing by	TuM
Sheet rev.	3
Project rev.	G

NAVIX designed solutions
Copyright by

Axopar Boat	31959 Sub-product code	39903 Product code	Project ID
37 MY20 Boat model	BOW THRUSTER CABLE SET V10 Title	HL Loc	195 / 210 Sheet

NOTICE! CABLES WITH STICKER

FOR EXAMPLE

HEAVY AMP: POWER+

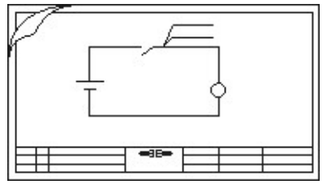

DOCUMENTS INCLUDED:

39903 BOW THRUSTER CABLE SET

LABEL

BOW HA CHR CABLES

(TO TOP OF PACKAGE)

-CH2a#1	BATTERY CHARGER OUT+	BOW_HA_CHR_F+	-CH_F5b:1	25 RED	1000 mm	BOW HA CHR: -2-	BOW HA AC_CH CHR FUSE: 2	-CH_F5b#1
25/6							-CH2a: BOW_HA_CHR_F+ 8	25/8
-A_F5c#1	BOW HA ALT CHR FUSE: 1	8 BOW_HA_CHR+	-CH_F5a:1	25 RED	1500 mm	BOW HA CHR: -3-	BOW HA AC_CH CHR FUSE: 1	-CH_F5a#1
25/10L							-A_F5c:1 BOW_HA_CHR+ 8	25/8
-A_F5b#1	BOW HA ALT CHR FUSE: 2	8 STB_ALT_B_HA_CHR+	-D4b:1	95 RED 30302 BT-SK 95mm²	550 mm	BOW HA CHR: -4-	STB ALT ISOL: OUT 1	-D4b#1
95/8							-A_F5b:1 STB_ALT_B_HA_CHR+ 6	1 95/8
-G5e#1	BOW HEAVY AUX BT: -	8 BOW_HA_BT-	-CH2b#1:1	25 BLACK	2000 mm	BOW HA CHR: -5-	BATTERY CHARGER OUT-	-CH2b#1
25/8							-G5e#1:1 BOW_HA_BT-	25/6

PACKED TO OWN PACKAGE.

NOTICE!
BATTERY CABLES NEED TO ADD MARKINGS
SHOWN IN EXAMPLE BELOW.

EXEMPTION:
ALL BLACK WIRES
THIS MARKING IS NOT NEEDED.

MARKING

BT-SK 750V AWG2 +100 C

CABLE

EXAMPLE: RED 50mm2 WIRE MARKINGS.

MARKING SHOWN ABOVE ONLY TO CABLES LISTED BELOW.

LOOK FOR EQUIVALENT AWG SIZE FOR mm2
AND ADD THIS TO CABLE MARKINGS.

FOR EXAMPLE:
CABLE SIZE IS 70mm2 --> MARKING AWG2/0.

EQUIVALENCY:

mm2		AWG
25 mm2	=	AWG3
35 mm2	=	AWG2
50 mm2	=	AWG0
70 mm2	=	AWG2/0
95 mm2	=	AWG3/0
120 mm2	=	250 kcmil

NOTICE!
BATTERY CABLES NEED TO ADD MARKINGS
SHOWN IN EXAMPLE BELOW.

EXEMPTION:
ALL BLACK WIRES
THIS MARKING IS NOT NEEDED.

MARKING

R2 ISO 6722 100V AWG6 +100 C

CABLE

EXAMPLE: RED 16mm2 WIRE MARKINGS.

MARKING SHOWN ABOVE ONLY TO CABLES LISTED BELOW.

LOOK FOR EQUIVALENT AWG SIZE FOR mm2
AND ADD THIS TO CABLE MARKINGS.

FOR EXAMPLE:
CABLE SIZE IS 25mm2 --> MARKING AWG3.

EQUIVALENCY:

mm2		AWG
10 mm2	=	AWG8
16 mm2	=	AWG6
25 mm2	=	AWG3
35 mm2	=	AWG2

Date of modification	Modified by	Description
30.7.2024	PF	G3: 2005139; Cable lug changes
13.10.2023	PF	F1: Import to F-revision
11.4.2024	PF	G2: 2005054; Isol. link rem, CH_F5 &cables added, MC_S4 label, lengths

Date	6.7.2019
Drawing by	TuM
Sheet rev.	3
Project rev.	G

NAVIX designed solutions

Copyright by

Axopar		39903	
Boat	Sub-product code	Product code	Project ID
37 MY20	BOW THRUSTER CABLE SET V10	HL	196 / 210
Boat model	Title	Loc	Sheet

NOTICE!
VERIFY THAT ALL CABLES HAVE MARKINGS
SHOWN IN EXAMPLE BELOW.

EXEMPTION:
ALL <500mm WIRES AND BLACK WIRES
THIS MARKING IS NOT NEEDED.

MARKING

R2 ISO 6722 100V AWG16 +100 C

CABLE

EXAMPLE: RED 1,5mm2 WIRE MARKINGS.

CUSTOMER: When no light pack is selected, install FOUR (4) pieces to main cabin

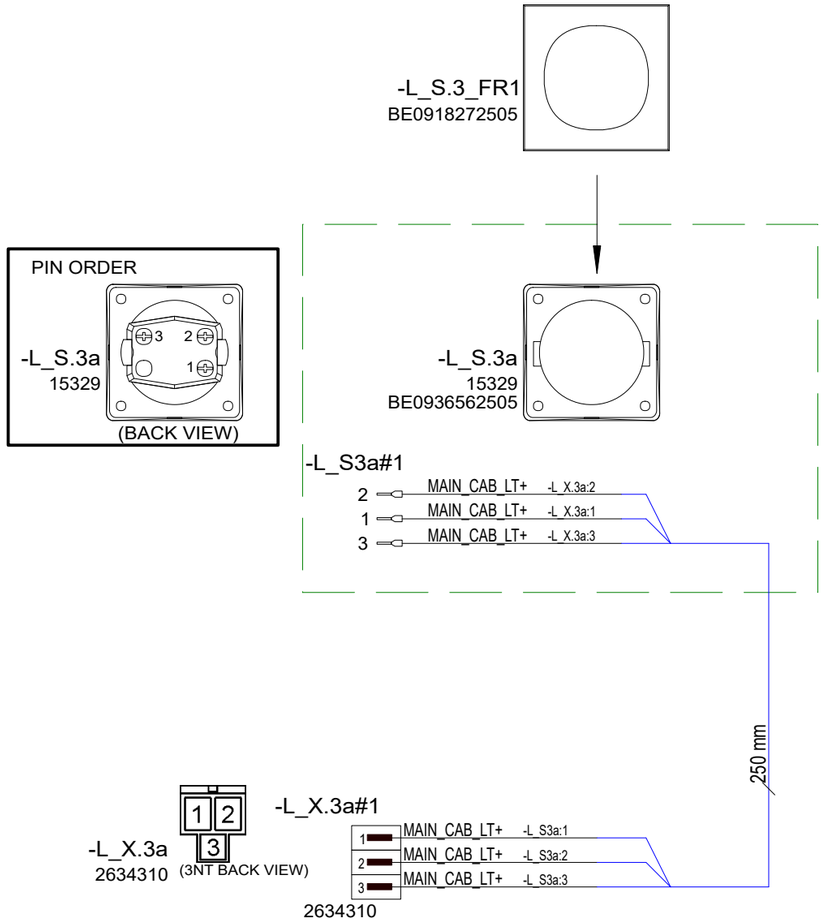

8.4.2024	PF	G1: 2005054; New product	Date	12.3.2024	NAVIX designed solutions	Axopar			
			Drawing by	PF		Boat	Sub-product code	41158 Product code	Project ID
			Sheet rev.	1		37 MY25	BASIC LIGHT SWITCH	HL	197 / 210
Date of modification	Modified by	Description	Project rev.	G	Copyright by	Boat model	Title	Loc	Sheet

NOTICE!
VERIFY THAT ALL CABLES HAVE MARKINGS
SHOWN IN EXAMPLE BELOW.

EXEMPTION:
ALL <500mm WIRES AND BLACK WIRES
THIS MARKING IS NOT NEEDED.

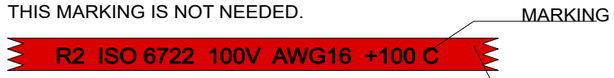

EXAMPLE: RED 1,5mm2 WIRE MARKINGS.

CUSTOMER: With light pack is selected, install TWO (2) pieces to main cabin

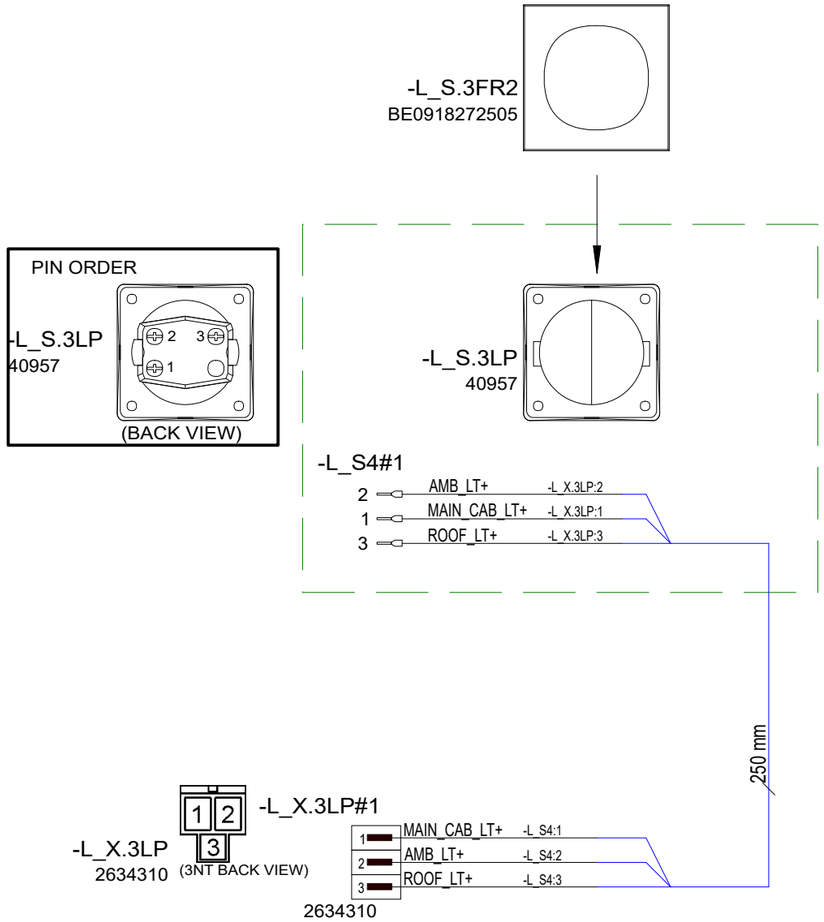

8.4.2024	PF	G1: 2005054; New product	Date	15.3.2024	NAVIX designed solutions	Axopar			
			Drawing by	PF		Boat	Sub-product code	41159 Product code	Project ID
			Sheet rev.	1		37 MY25	LIGHT PACK SWITCH	HL	198 / 210
Date of modification	Modified by	Description	Project rev.	G	Copyright by	Boat model	Title	Loc	Sheet

CUSTOMER: CONNECT BOTH CONNECTORS TO HULL HARNESS NEAR RELAY UNIT
NOTICE! FROM RELAY UNIT LEAVE RL_X.1g UNCONNECTED

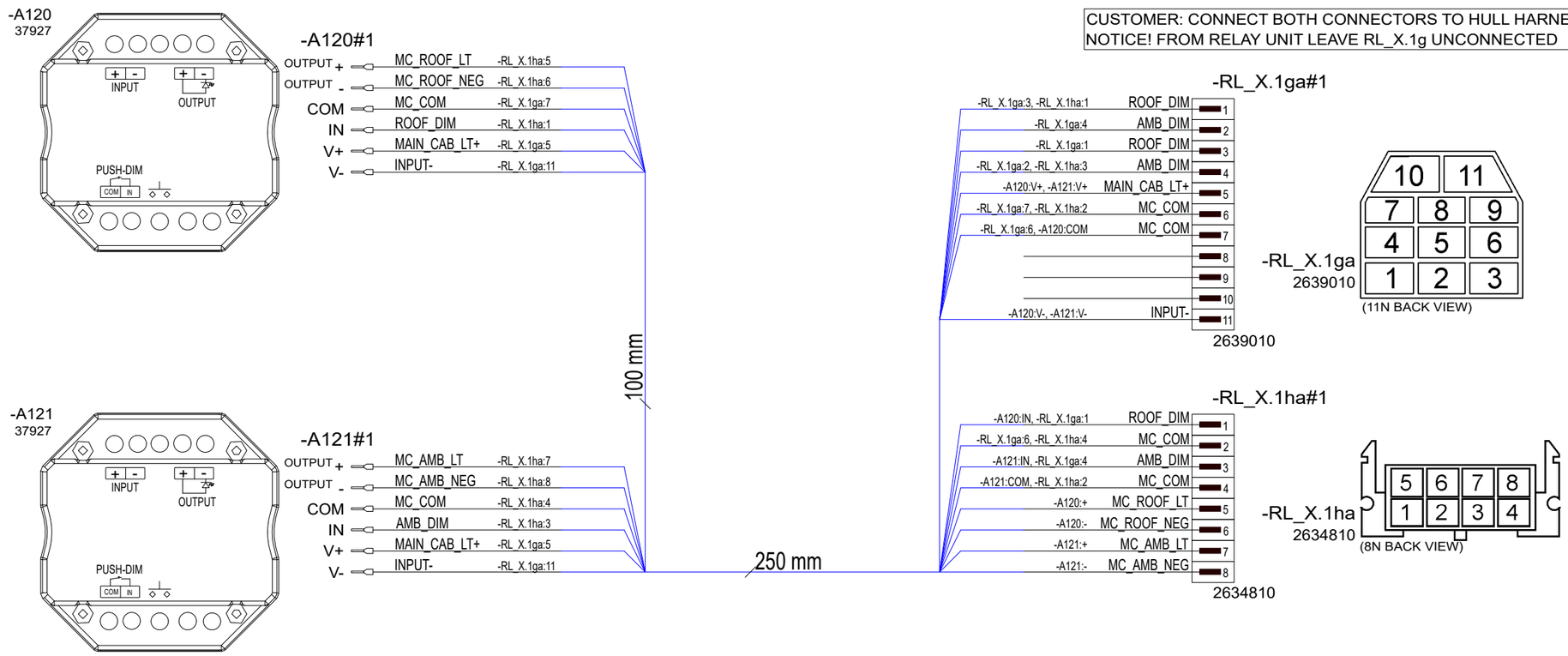

8.4.2024	PF	G1: 2005054; New product	Date	15.3.2024	NAVIX designed solutions	Axopar		41160	
			Drawing by	PF		Boat	Sub-product code	Product code	Project ID
			Sheet rev.	1		37 MY25	DIMMER KIT	HL	199 / 210
Date of modification	Modified by	Description	Project rev.	G	Copyright by	Boat model	Title	Loc	Sheet

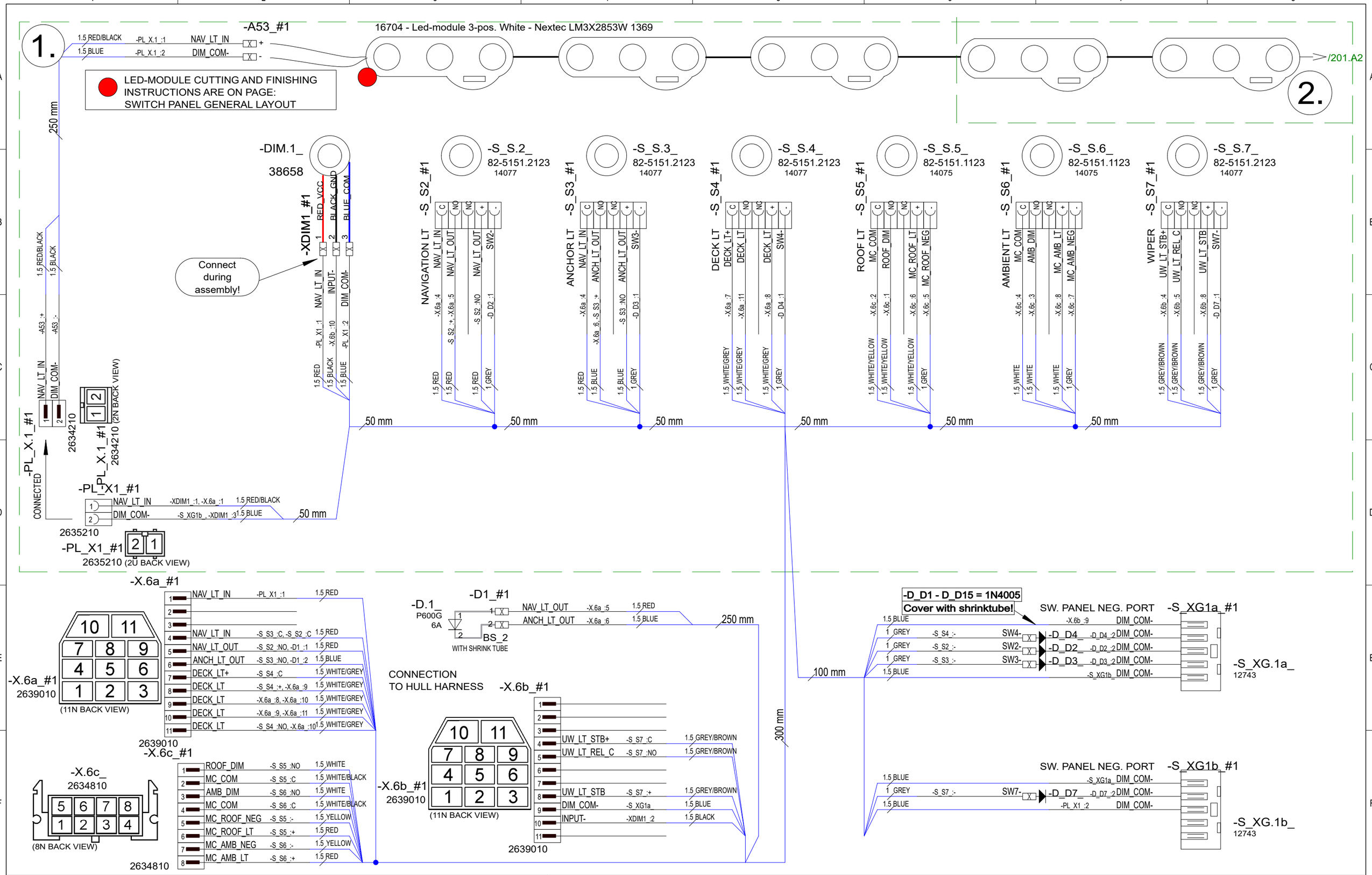

2.4.2024	PF	G1:2005054; New product	Date 2.4.2024	NAVIX designed solutions	Axopar	SEE EXP VIEW	41161
			Drawing by TuM		Boat	Sub-product code	Product code / Project ID
			Sheet rev. 1		37 MY25	SWITCH PANEL LIGHT PACK	HL
Date of modification	Modified by	Description	Project rev. G	Copyright by	Boat model	Title	Loc / 200 / 210 Sheet

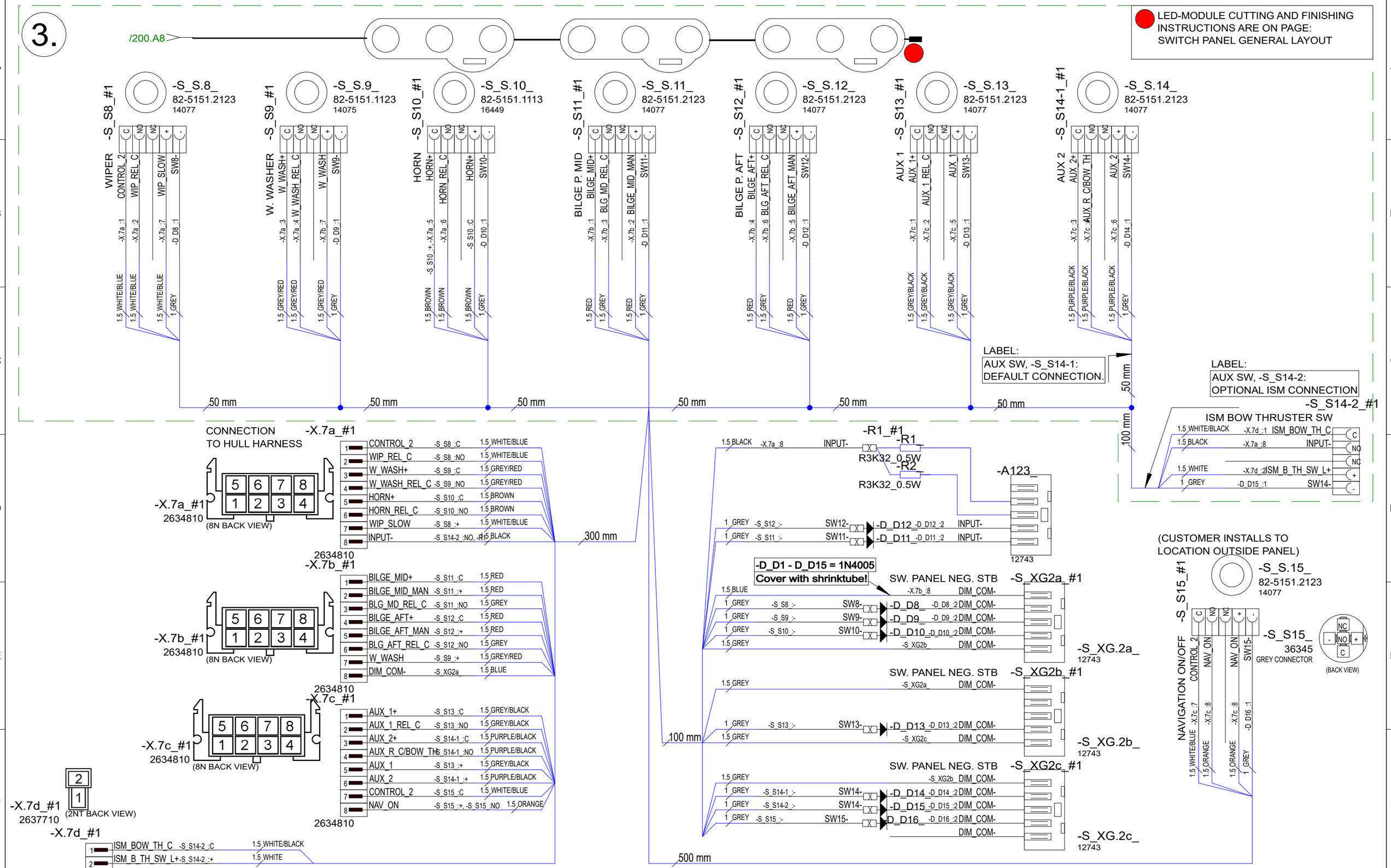

2.4.2024	PF	G1:2005054; New product	Date	2.4.2024	NAVIX designed solutions	Axopar	SEE EXP VIEW	41161
			Drawing by	TuM		Boat	Sub-product code	Product code / Project ID
			Sheet rev.	1		37 MY25	SWITCH PANEL LIGHT PACK	HL
Date of modification	Modified by	Description	Project rev.	G	Copyright by	Boat model	Title	Loc / 201/ 210 Sheet

SWITCH PANEL GENERAL LAYOUT / LED MODULE CUTTING & FINISHING

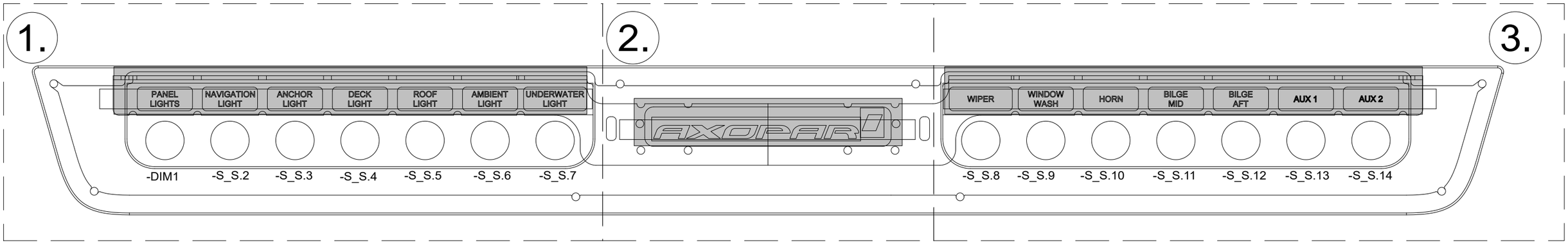

16704 - Led-module 3-pos. White - Nextec LM3X2853W 1369

BUNDLE EXTRA WIRING BETWEEN MODULES TO THE LOOPS AND STRING WITH ZIP TIES

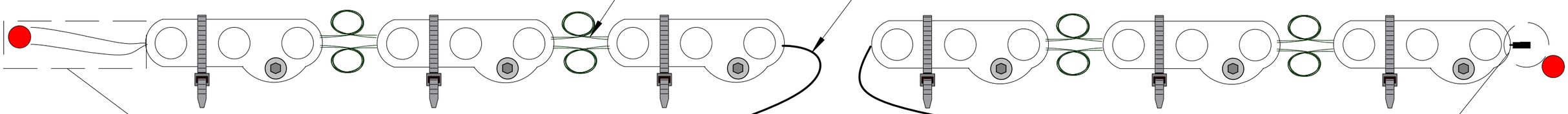

CUT LED MODULES INPUT SIDE OF THE WIRES APPROX. 60mm LENGTH
(SHOULD BE ABOUT THE CENTER POS. BETWEEN 2 MODULES)

STRIP WIRE ENDS APPROX. 7mm AND CRIMP WIRES TO THE BUTT SPLICE CONNECTORS -A53.

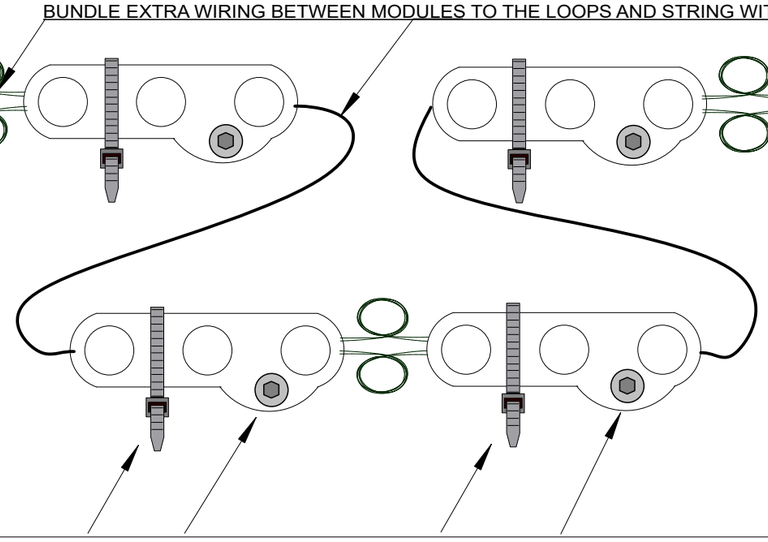

ATTACH ALL LED MODULES TO THE BRACKET 36371 WITH M3X12 BH HEX BOLT A4, NUT M3 AND 2-SIDED TAPE. ADD CABLE TIE. SEE ALSO EXP. VIEW

TURN THE ENDS OF CABLE TIES TOWARDS TO THE PANEL!

1. CUT THE WIRES APPROX. 40mm. (JUST CUT, DO NOT STRIP!)

2. BEND THE WIRES TO THE SHAPE OF "U".

3. ADD APPROX. 20mm OF HEAT SHRINK TUBE "17418" OVER THE BENDED WIRES.

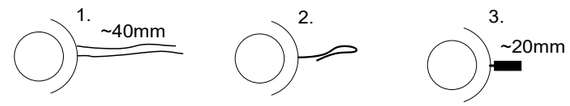

HOW TO BUNDLE EXTRA WIRING BETWEEN MODULES TO THE LOOPS AND STRING WITH ZIP TIES

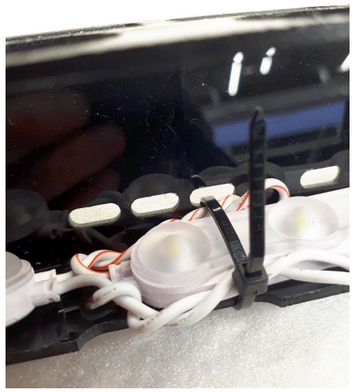

NOTICE!
VERIFY THAT ALL CABLES HAVE MARKINGS SHOWN IN EXAMPLE BELOW.

EXEMPTION:
ALL <500mm WIRES AND BLACK WIRES THIS MARKING IS NOT NEEDED.

MARKING

R2 ISO 6722 100V AWG16 +100 C

CABLE

EXAMPLE: RED 1,5mm2 WIRE MARKINGS.

2.4.2024	PF	G1:2005054; New product	Date	2.4.2024	NAVIX designed solutions	Axopar	SEE EXP VIEW	41161
			Drawing by	TuM		Boat	Sub-product code	Product code / Project ID
			Sheet rev.	1		37 MY25	SWITCH PANEL LIGHT PACK	HL
Date of modification	Modified by	Description	Project rev.	G	Copyright by	Boat model	Title	Loc / 202 / 210 Sheet

41161_AXOPAR_37_MY25_SWITCH_PANEL_LIGHT_PACK

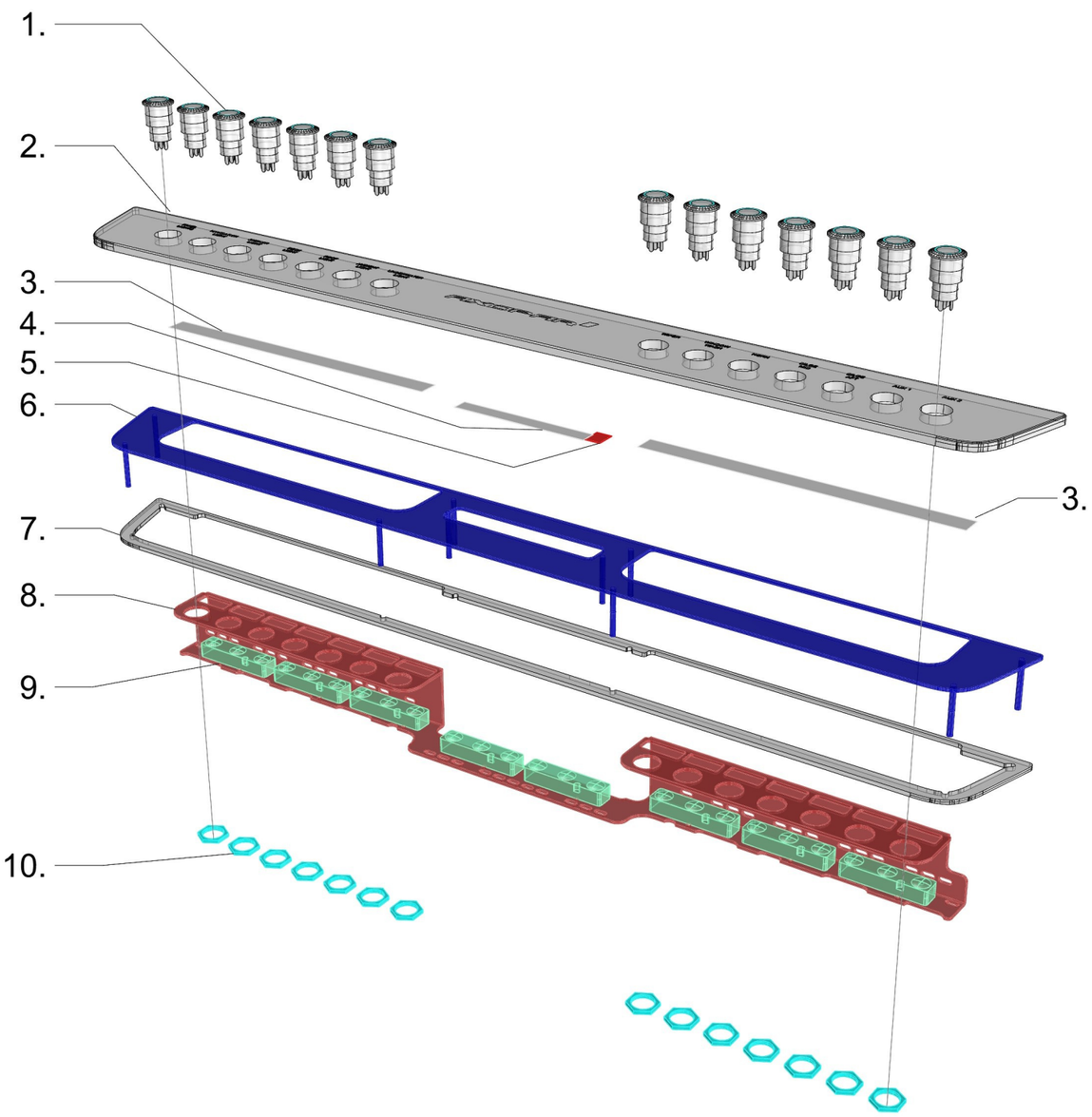

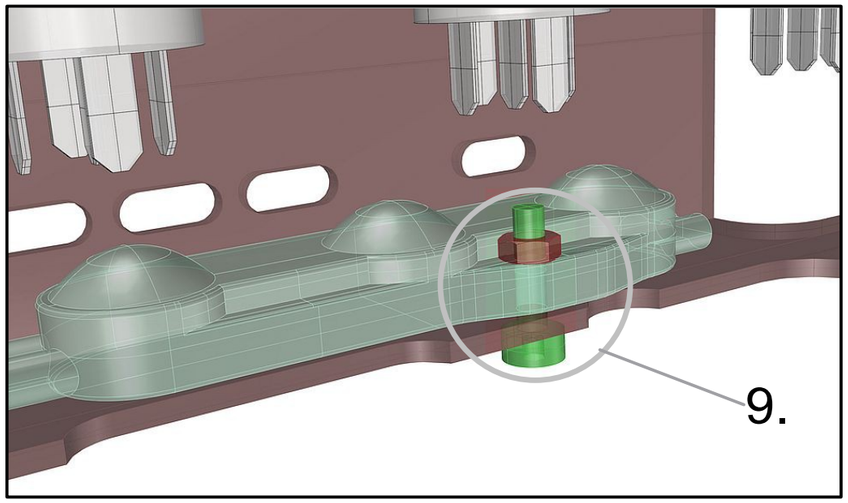

41161_AXOPAR_37_MY25_SWITCH_PANEL_LIGHT_PACK

1. 14PCS HALO SWITCH (AS IN DIAGRAM)

2. 1PCS 29767_AXOPAR_37_MY20_ACRYL_SWITCH_PANEL_(WOC)_V4

3. 2PCS 29771_AXOPAR_37_MY20_SWITCH_PANEL_TEXT_STICKER_V1
(PLACE BEHIND THE TEXT AREA IN 29767)

4. 1PC 23722_AXOPAR_28_SWITCH_PANEL_LOGO_WHITE_STICKER_V1
(PLACE BEHIND THE TEXT AREA IN 29767)

5. 1PC 23723_AXOPAR_28_SWITCH_PANEL_LOGO_RED_STICKER_V1
(PLACE BEHIND THE TEXT AREA IN 29767)

6. 1PC 29768_AXOPAR_37_MY20_SWITCH_PANEL_METAL_BACK_FRAME_V2
ATTACH TO 29767 WITH BLACK MS-POLYMER GLUE

7. 1PC 29769_AXOPAR_37_MY20_SWITCH_PANEL_GASKET_(WOC)_V1
GLUE WITH 2-SIDED TAPE TO THE BACKSIDE OF 29768

8. 1PC 36371_AXOPAR_SWITCH_PANEL_LED_MODULE_BRACKET_(WOC)_V2

9. 8PCS 16704 LED MODULE WHITE ATTATCH TO 36371 WITH M3X12 BH HEX BOLT A4 AND NUT
ATTACH TO BRACKET WITH CABLE TIES AND 2-SIDED TAPE

10. 14PCS HALO SWITCH NUT

TS 10.4.2024

EXP VIEW

2.4.2024	PF	G1:2005054; New product	Date	2.4.2024	NAVIX designed solutions	Axopar	SEE EXP VIEW	41161
			Drawing by	TuM		Boat	Sub-product code	Product code
			Sheet rev.	1		37 MY25	SWITCH PANEL LIGHT PACK	HL
Date of modification	Modified by	Description	Project rev.	G	Copyright by	Boat model	Title	Loc

Project ID

203 / 210
Sheet

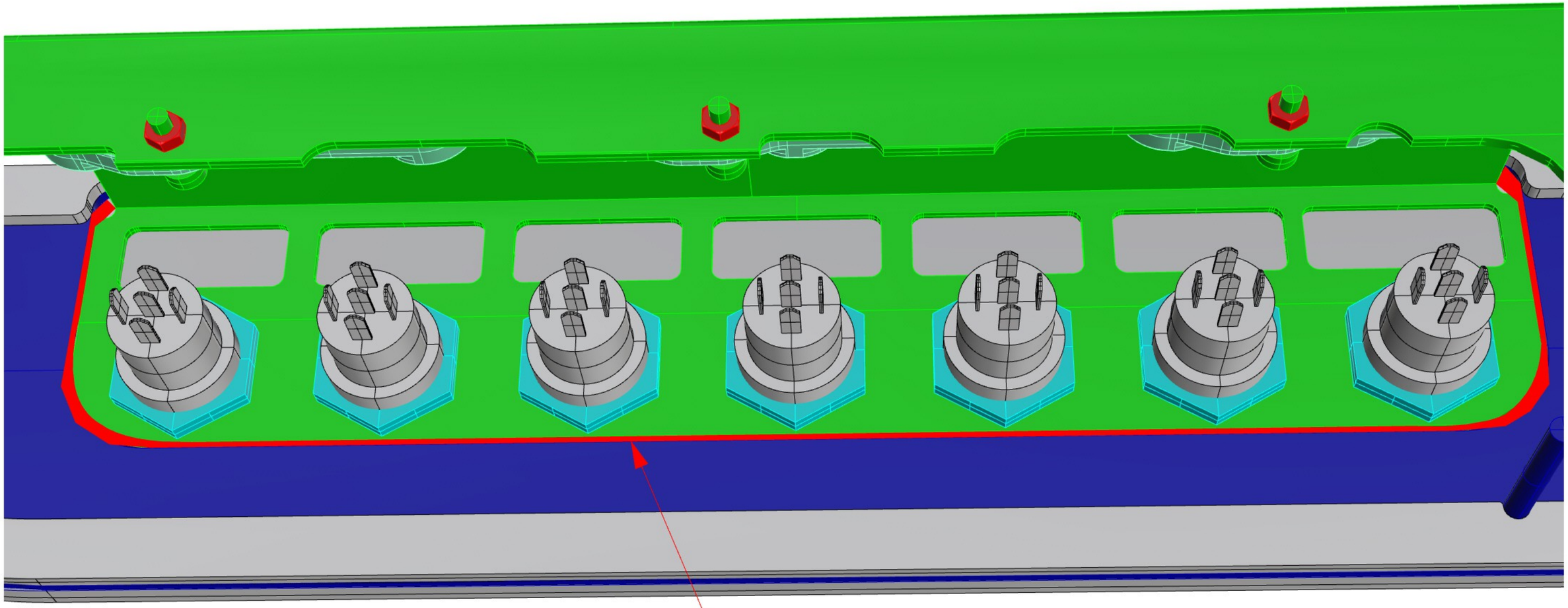

FILL THE CAP BETWEEN
METAL FRAME AND LED BRACKET
WITH 21119 MS-POLYMER BLACK GLUE
GLUE MUST BE FLUSH WITH PANELS

2.4.2024	PF	G1:2005054; New product	Date	2.4.2024	NAVIX designed solutions	Axopar	SEE EXP. VIEW	41161
			Drawing by	TuM		Boat	Sub-product code	Product code
			Sheet rev.	1		37 MY25	SWITCH PANEL LIGHT PACK	HL
Date of modification	Modified by	Description	Project rev.	G	Copyright by	Boat model	Title	Loc

Project ID

204 / 210
Sheet

Axopar 37 MY20 SWITCH PANEL 41161 INSPECTION SHEET

PRUDUCT LABEL

TEST

1) S2, S3, S4 should be pressed. No other buttons may be pressed during entire test. Power source off.
2) Connect -X.6b/9 and -X.7b/8 with a wire.
3) Connect positive (+12V) to connectors listed below
4) Connect negative (-) to -X.6b/10 and -X.7a/8. Turn power on.
5) Observe, change brightness and turn on/off by pressing DIM1. Panel lights and switch halos must illuminate. S11 and S12 should illuminate constantly with full brightness, S5 and S6 should not illuminate at all. All other lights should turn on/off/dim from DIM1.

Connect positive (+)
X.6a_/1
X.6a_/4
X.6a_/7
X.6b_/8
X.7a_/7
X.7b_/7
X.7a_/5
X.7b_/2
X.7b_/5
X.7c_/5
X.7c_/6
X.7d_/2

Connect negative (-)
X.6b_/10
X.7a_/8

PASS / FAIL

DATE _____

TESTED BY _____

TEST INSTRUCTIONS

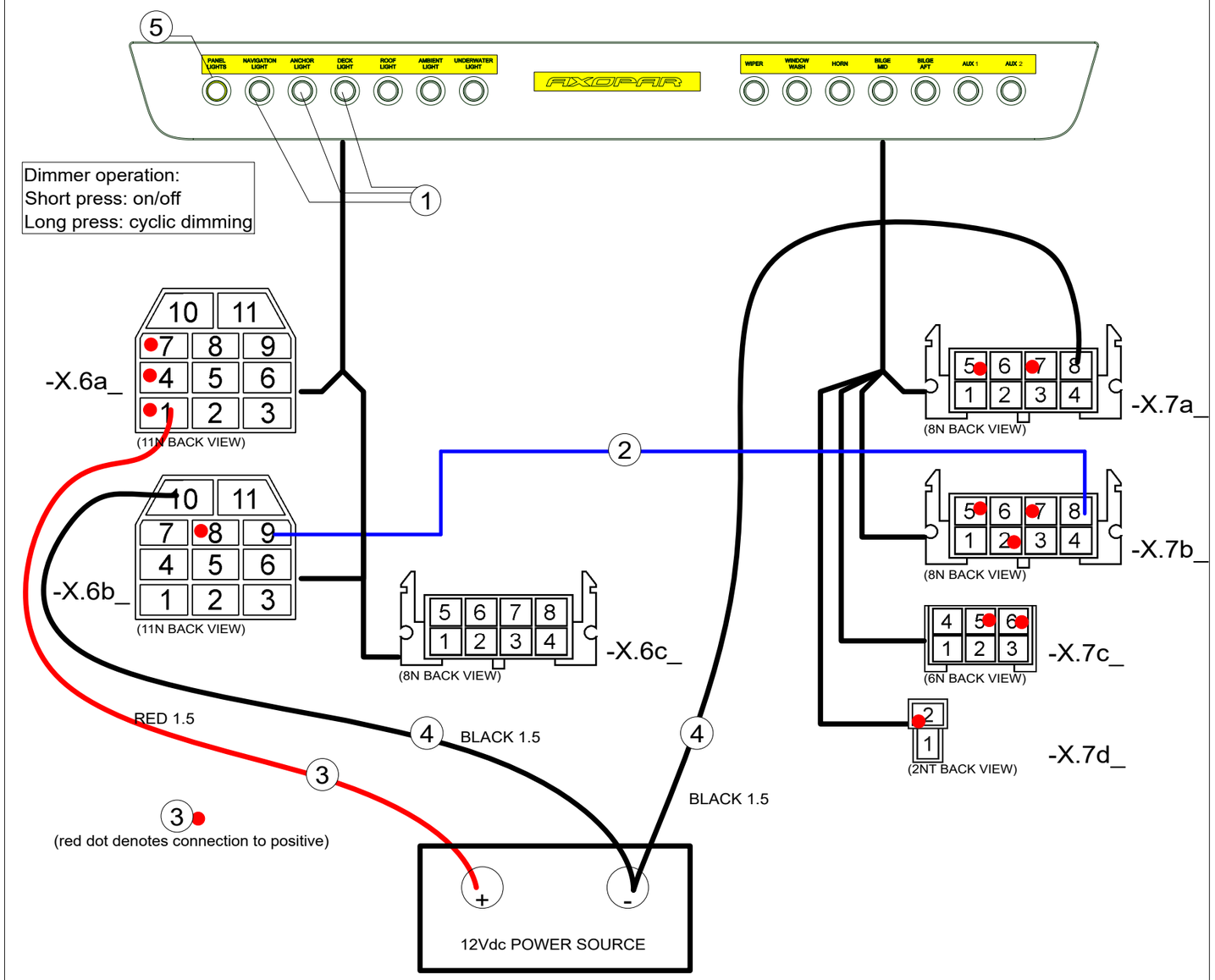

2.4.2024	PF	G1:2005054; New product	Date	2.4.2024	NAVIX designed solutions	Axopar	SEE EXP VIEW	41161
			Drawing by	TuM		Boat	Sub-product code	Product code / Project ID
			Sheet rev.	1		37 MY25	SWITCH PANEL LIGHT PACK	HL
Date of modification	Modified by	Description	Project rev.	G	Copyright by	Boat model	Title	Loc / 205 / 210 Sheet

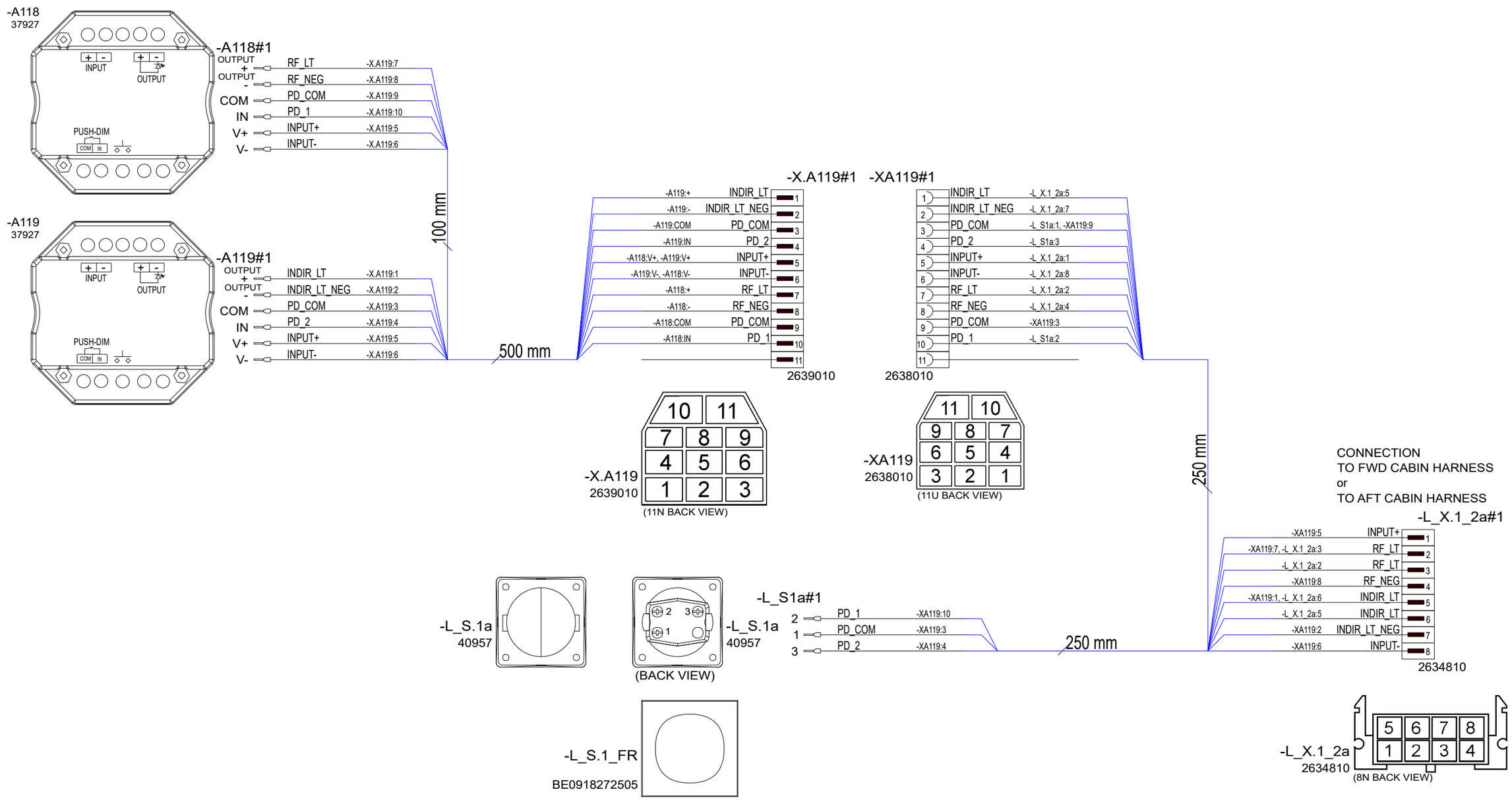

8.4.2024	PF	G1: 2005054; New product	Date	27.3.2024	NAVIX designed solutions	Axopar		41196	
			Drawing by	PF		Boat	Sub-product code	Product code	Project ID
			Sheet rev.	1		37 MY25	FRONT AND AFT CABIN LIGHT SWITCH	HL	206 / 210
Date of modification	Modified by	Description	Project rev.	G	Copyright by	Boat model	Title	Loc	Sheet

NOTICE!
BATTERY CABLES NEED TO ADD MARKINGS
SHOWN IN EXAMPLE BELOW.

EXEMPTION:
ALL BLACK WIRES
THIS MARKING IS NOT NEEDED.

MARKING

BT-SK 750V AWG2 +100 C

CABLE

EXAMPLE: RED 50mm2 WIRE MARKINGS.

MARKING SHOWN ABOVE ONLY TO CABLES LISTED BELOW.

LOOK FOR EQUIVALENT AWG SIZE FOR mm2
AND ADD THIS TO CABLE MARKINGS.

FOR EXAMPLE:
CABLE SIZE IS 70mm2 --> MARKING AWG2/0.

EQUIVALENCY:

mm2		AWG
25 mm2	=	AWG3
35 mm2	=	AWG2
50 mm2	=	AWG0
70 mm2	=	AWG2/0
95 mm2	=	AWG3/0
120 mm2	=	250 kcmil

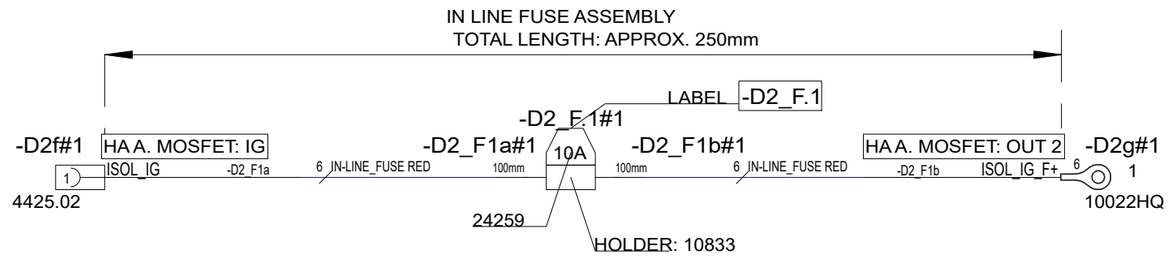

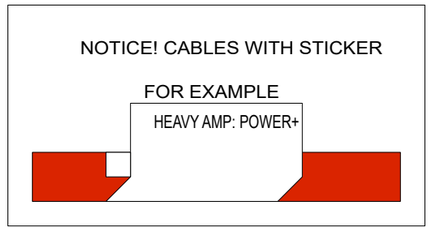

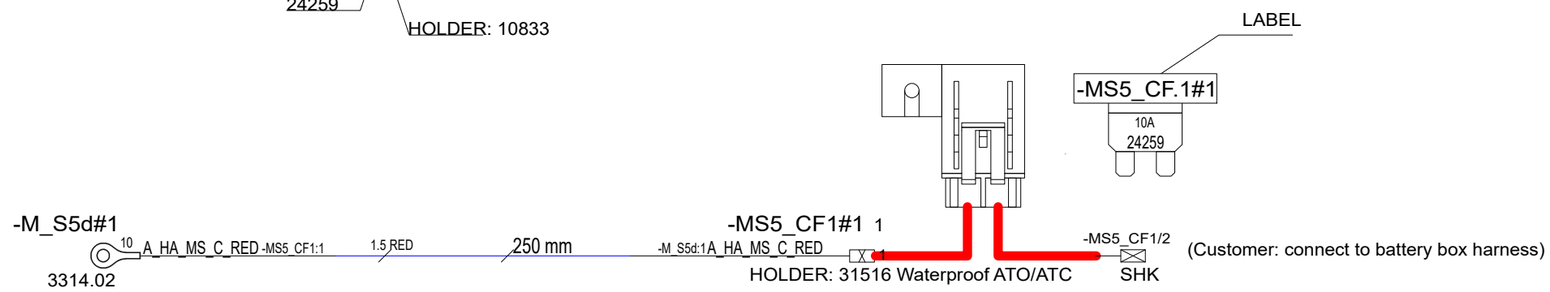

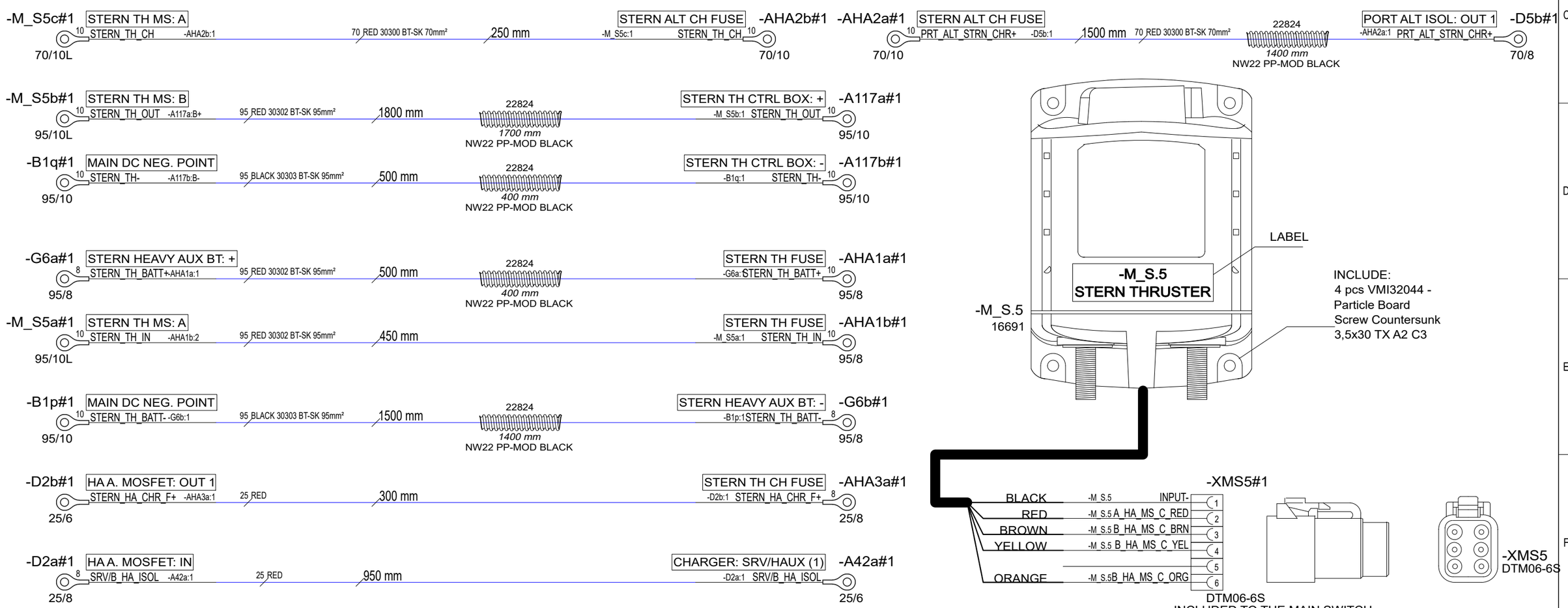

Date of modification	Modified by	Description
19.4.2024	PF	G1: 2005054; New product
30.7.2024	PF	G2: 2005139; Cable lug changes

Date	20.2.2024
Drawing by	PF
Sheet rev.	2
Project rev.	G

NAVIX designed solutions
Copyright by

Axopar Boat	See exp. view Sub-product code	41197 Product code	Project ID
37 MY25 Boat model	STERN THRUSTER CABLES Title	HL Loc	207 / 210 Sheet

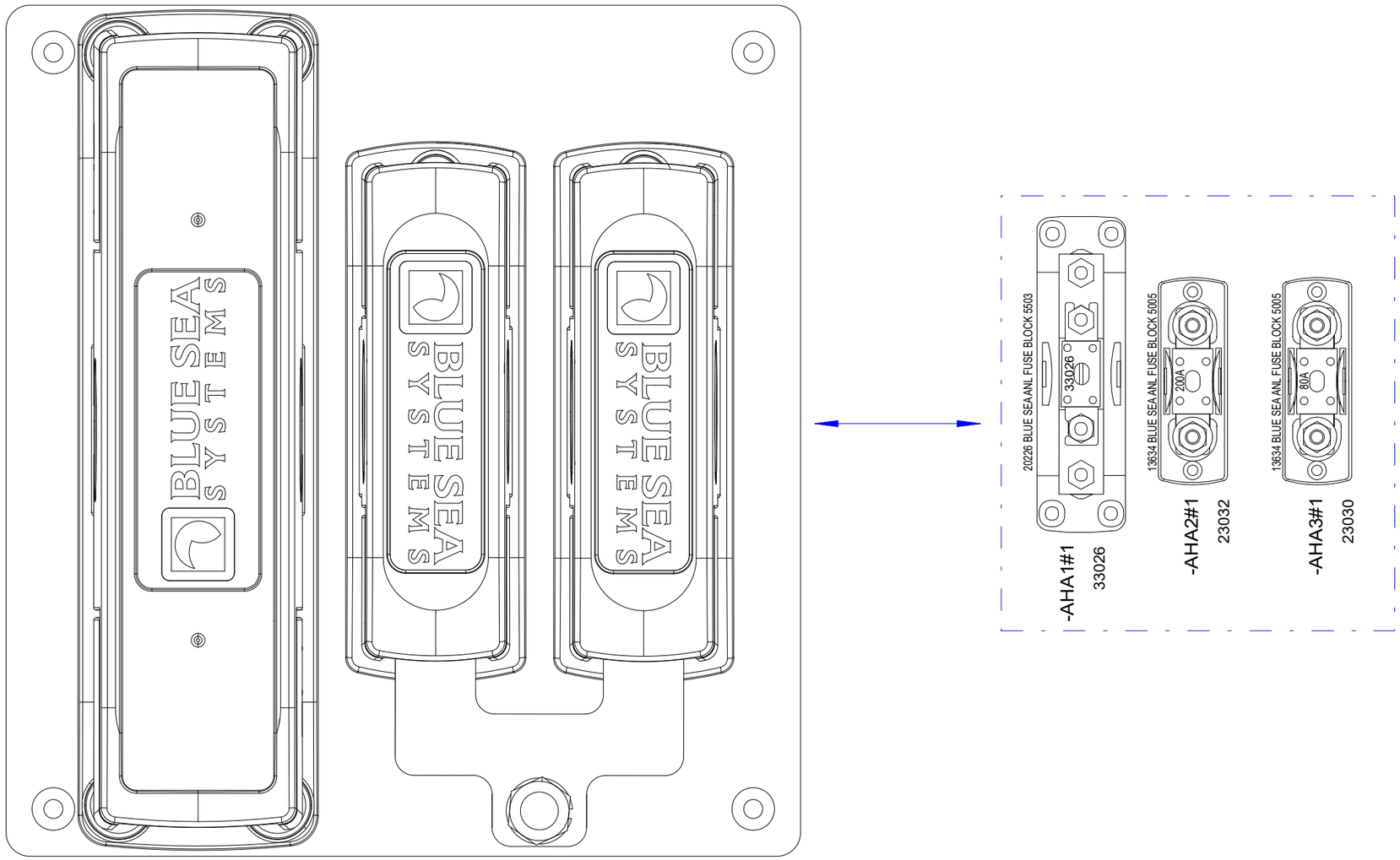

PACK WITH PRODUCT:
4PCS
VMI30916 - Countersunk head Screw HEX socket M4X14 DIN7991 C4

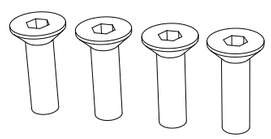

Date of modification	Modified by	Description
19.4.2024	PF	G1: 2005054; New product
30.7.2024	PF	G2: 2005139; Cable lug changes

Date	19.4.2024
Drawing by	PF
Sheet rev.	2
Project rev.	G

NAVIX designed solutions
Copyright by

Axopar Boat	See exp. view Sub-product code	41197 Product code	Project ID
37 MY25 Boat model	STERN THRUSTER CABLES Title	HL Loc	208 / 210 Sheet

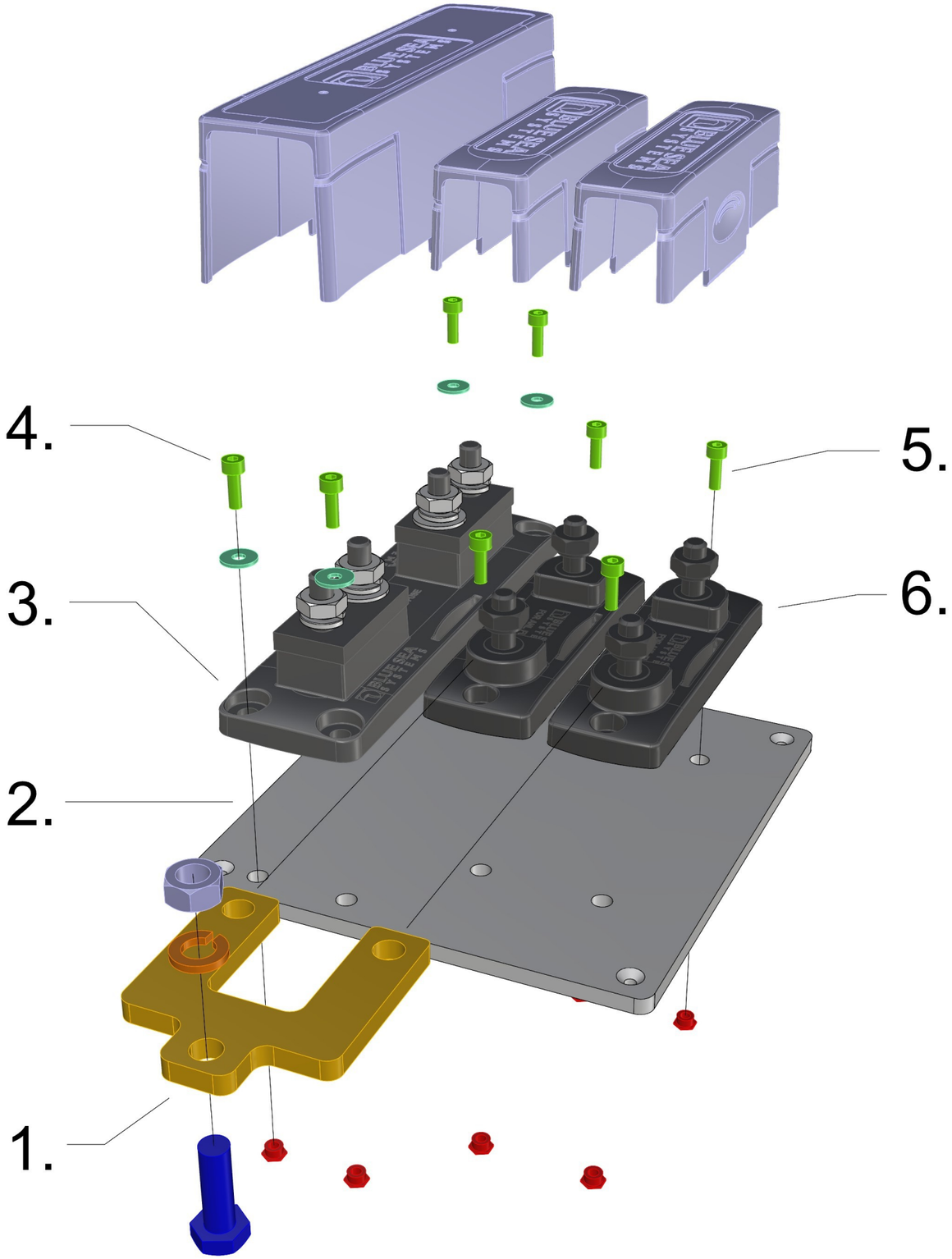

41258_AXOPAR_37_MY25_BATTERY_BOX_STERN_THRUSTER_MODULE

1. 1PC VMI32018 - HEX Bolt Full thread M8X25 DIN933 C4
   1PC 30142_ANL_CONNECTION_BAR_DOUBLE_V1
   1PC VMI32011 - Spring Lock washer M8 DIN127 C4
   1PC VMI32012 - HEX Nut M8 DIN934 C4

2. 1PC 41259_AXOPAR_37_MY25_B_BOX_STM_PLATE_V1

3. 1PC 20226 FUSE BLOCK ANL 35 750A Blue Sea 5503B BSS (AS IN DIAGRAM)
4. 4PCS VMI30944 - HEX socket Head Cap Screw M4X12 DIN912 C4
   4PCS VMI30907 - M4 Washer,large outside diameter 12mm DIN9021 C4
   4PCS 9872 - PURISTEVÄLIHOLKKI ETSOS-M4x4

5. 4PCS VMI30944 - HEX socket Head Cap Screw M4X12 DIN912 C4
   4PCS 9872 - PURISTEVÄLIHOLKKI ETSOS-M4x4

6. 2PCS 13634 - FUSE HOLDER ANL 35-300A w/cover - Blue Sea 5005B-BSS (AS IN DIAGRAM)

18.4.2024 / TS (2005054)

Date of modification	Modified by	Description
19.4.2024	PF	G1: 2005054; New product
30.7.2024	PF	G2: 2005139; Cable lug changes

Date	19.4.2024
Drawing by	PF
Sheet rev.	2
Project rev.	G

NAVIX designed solutions
Copyright by

Axopar Boat	See exp. view Sub-product code	41197 Product code	Project ID
37 MY25 Boat model	STERN THRUSTER CABLES Title	HL Loc	209 / 210 Sheet

CUSTOMER INSTALLATION INSTRUCTION

NAVIX installs holders, fuses and copper bar onto module 41258
CUSTOMER installs main switch and module 41258 to 29617 BATTERY BOX FWD WALL PANEL

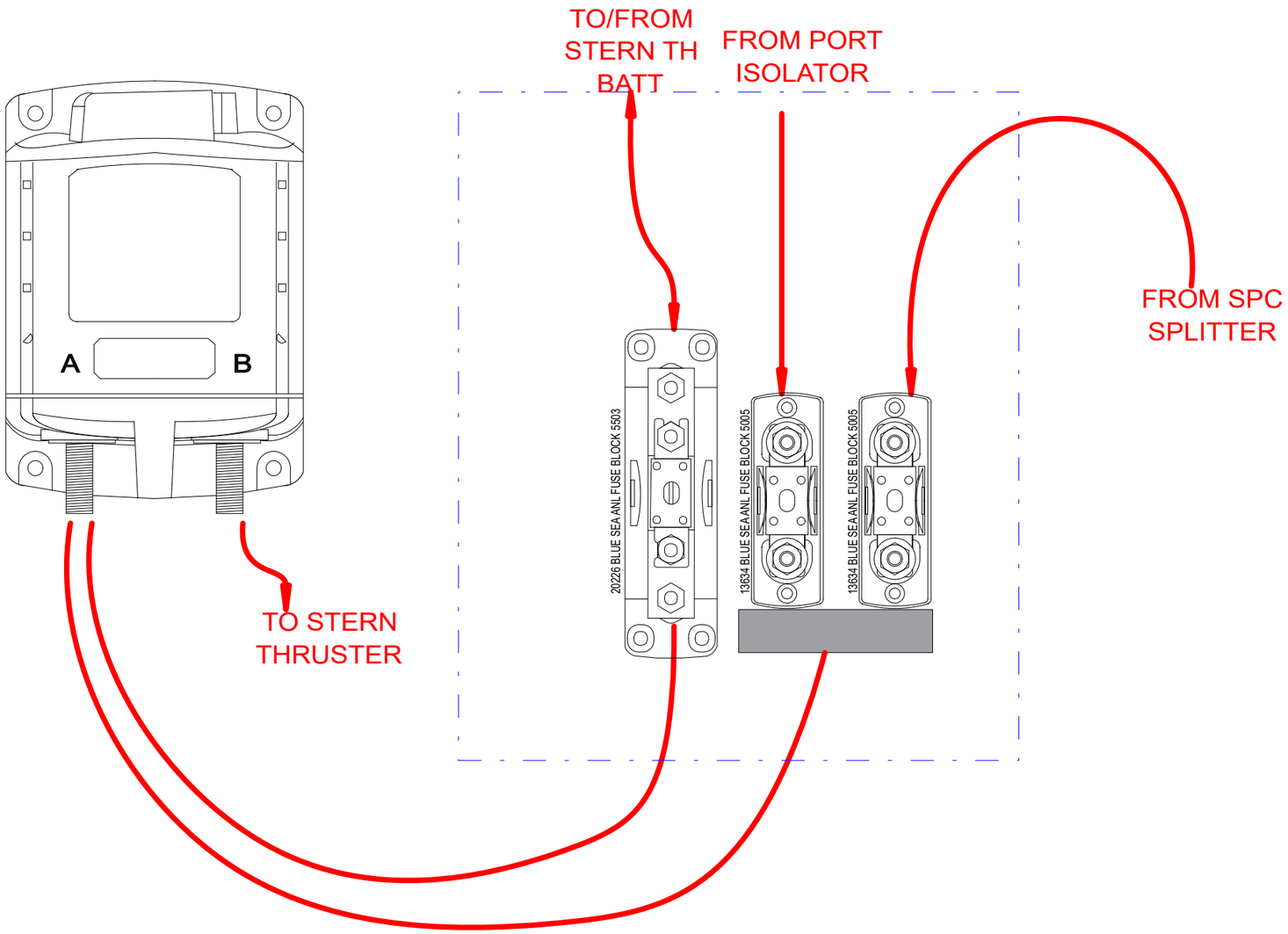

19.4.2024	PF	G1: 2005054; New product	Date	17.4.2024	NAVIX designed solutions	Axopar	See exp. view	41197
30.7.2024	PF	G2: 2005139; Cable lug changes	Drawing by	PF		Boat	Sub-product code	Product code
			Sheet rev.	2		37 MY25	STERN THRUSTER CABLES	HL
Date of modification	Modified by	Description	Project rev.	G	Copyright by	Boat model	Title	Loc

Project ID

210 / 210
Sheet

12 Appendix IV: AIS Decontamination – North America

According to

ABYC T-32 Design and Construction in Consideration of Aquatic Invasive Species 7/21

Table of Contents

1 Decontamination criteria based on UMPS III, Table 3

The table is a summary of scientific research indicating the lethal water temperature at point of contact and duration for decontamination. Information is grouped by the location of the boat that is targeted and the life form of Dreissenid mussel targeted (e.g., adult mussel or veliger). Please refer to the *Student Training Curriculum for Watercraft Inspectors and Decontaminators to Prevent and Contain the Spread of Aquatic Invasive Species in the USA* for complete step by step procedures.

	Boat part/ location	**Water temperature**	**Duration[1)] (sec)**	**Type of application**	**Target life stage**
Exterior	Hull	140°F	10	High pressure spray[2)]	Adult
	Trailer	140°F	70	Low pressure spray[3)]	Adult
	PFDs, anchor, paddle	140°F	10	Low pressure spray	Adult or Veliger
Propulsion system	Gimbal	140°F	132	Low pressure spray	Adult
	Engine	140°F[5), 6)]	See note[7)].	Flush[6)]	Veliger
Interior	Ballast tanks	120°F	130	*Low risk* – Flush[4)] *High risk* – Fill and flush	Veliger
	Live well/bait well	120°F	130	Low pressure spray or flush	Veliger
	Bilge	120°F	130	Flush or low pressure spray	Veliger

1) The times listed are the minimum times necessary to achieve mortality.

2) High pressure = 3000 psi.

3) Low pressure = using the pressure from the decontamination unit with no nozzle, not to exceed 60 psi (essentially a garden hose flow).

4) Flush = adding water to a compartment of a boat to treat or force the water out.

5) These temperatures denote the exit temperature (i.e., temperature of water exiting the boat not exiting the wand or flush attachment).

6) When flushing engines with a dedicated connection (not muffs), the pressure should be limited to less than 60 psi to prevent internal engine damage. The maximum input temperature during flushing should not exceed 140°F.

7) *NOTE: Engine flushing relies on the exit temperature as a guideline for decontamination duration.*

2 Example of AIS Owner's Manual Information

Aquatic invasive species

Aquatic invasive species (AIS) are plants and animals that occur in waters in which they are not native and whose introduction causes or is likely to cause economic or environmental damage or harm to human health. AIS have a negative impact on the waterway, its native species, and recreational and commercial uses of the waterway.

As responsible boaters and citizens, each boat owner should do their part to prevent the spread of these aquatichitchhikers. In many cases, it is also required by law. Check local regulations for any waterway where you will boat.

After each boating trip, follow these three simple steps before you leave the water access to stop the spread of AIS: Clean, Drain, and Dry. This is the boater's way to help protect the environment from the damage that AIS can cause.

Clean

Inspect and remove all aquatic plants, animals, mud, and debris from the boat, engine, trailer, anchor, and any watersports equipment.

- Rinse, scrub or wash, as appropriate, away from storm drains, ditches, or waterways.
- Rinse watercraft, trailer, and equipment with hot water, when possible.
- Flush motor according to owner's manual.

Drain

Completely drain all water from the boat and its compartments, including but not limited to the bilge, wells, lockers, ballast tanks or bags, bait containers, engines, and outdrives.

Dry

Allow the boat to completely dry before visiting any other bodies of water.

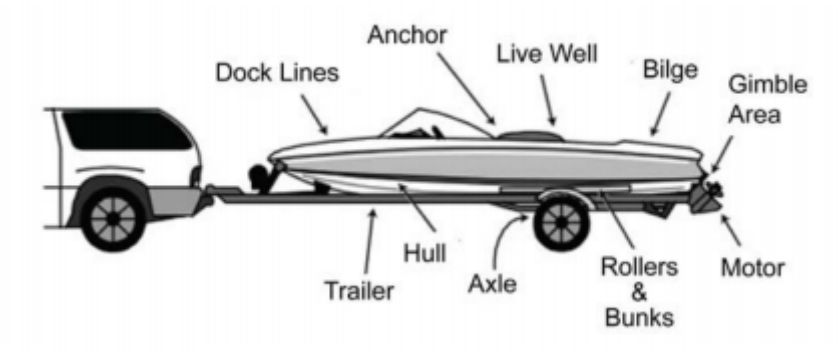

NOTE: Some localities may require inspection or decontamination before and/or after launching. Check state and local laws and regulations for requirements prior to traveling to go boating.

3 Additional boat-specific recommendations

Nonmotorized watercraft

Canoes, rafts, kayaks, rowboats, paddleboats, inflatables, sculls, and other nonmotorized recreational watercraft also require proper treatment.

- **Clean** straps, gear, paddles, floats, ropes, anchors, dip nets, and trailer before leaving the water body.
- **Dry** everything completely between each use and before storing.
- **Wear** quick-dry footwear or bring a second pair of footwear with you when portaging between waterbodies.

Sailboats

- **Clean** centerboard, bilge board, wells, rudderpost, trailer, and other equipment before leaving the water body.
- **Drain** water from boat, motor, bilge, ballast, wells, and portable bait containers before leaving the water body.

Motorized watercraft

- **Inspect** and **clean** motor or engine, including the gimbal area; trailer, including axles, bunkers, and rollers; anchors; dock lines; and equipment before leaving the water body.
- **Drain** live wells, bait containers, ballast and bilge tanks, and engine cooling systems.

Jet boats and personal watercraft (PWCs)

- **Inspect** and **clean** hull, trailer, intake grate, and steering nozzle, etc.
- **Clean** hull, trailer, intake grate, and steering nozzle, etc before leaving the water access.
- **Run** engine 5-10 sec to blow out excess water and vegetation from internal drive before leaving the waterbody.

13 Appendix V: Transport dimensions

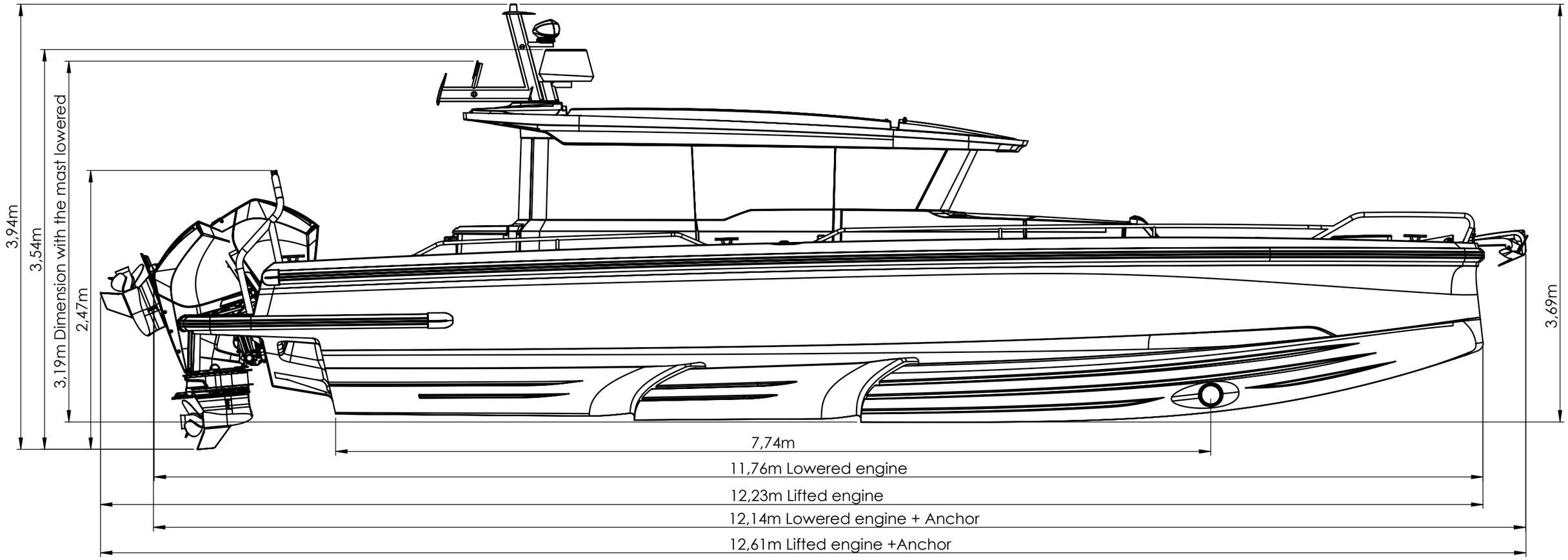

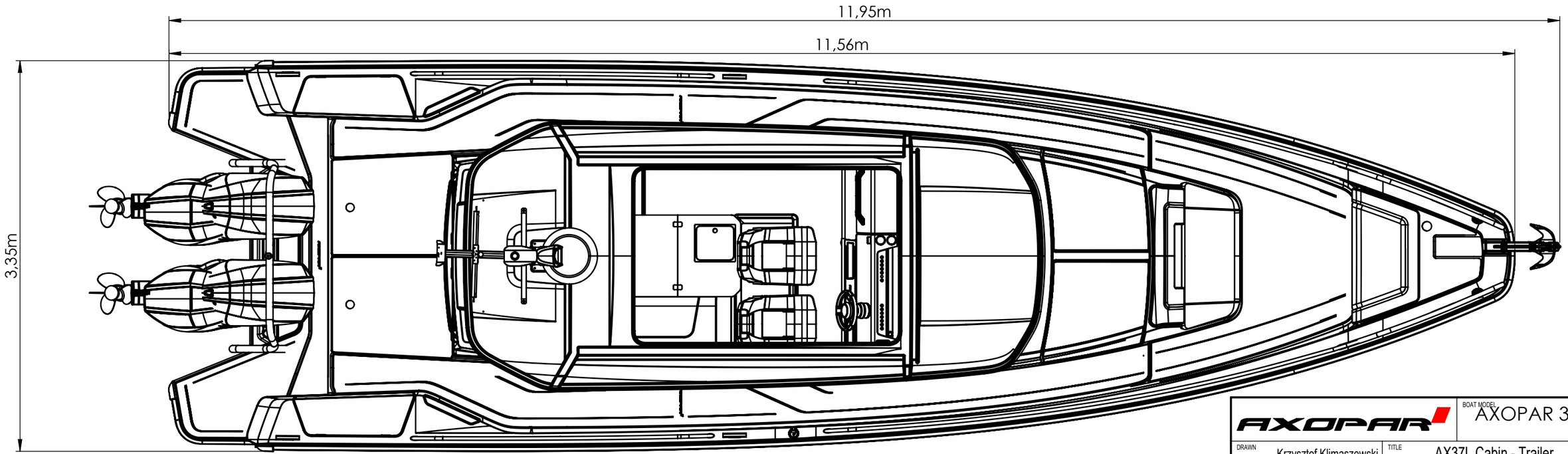

AXOPAR

BOAT MODEL: AXOPAR 37L

DRAWN: Krzysztof Klimaszewski	TITLE: AX37L Cabin - Trailer dimentions		
MODEL ASSEMBLY: Krzysztof Klimaszewski			
APPROVED: Petri Aari	DATE: 16.12.2019	DWG NO.	Rev. B / SHEET 1 of 1

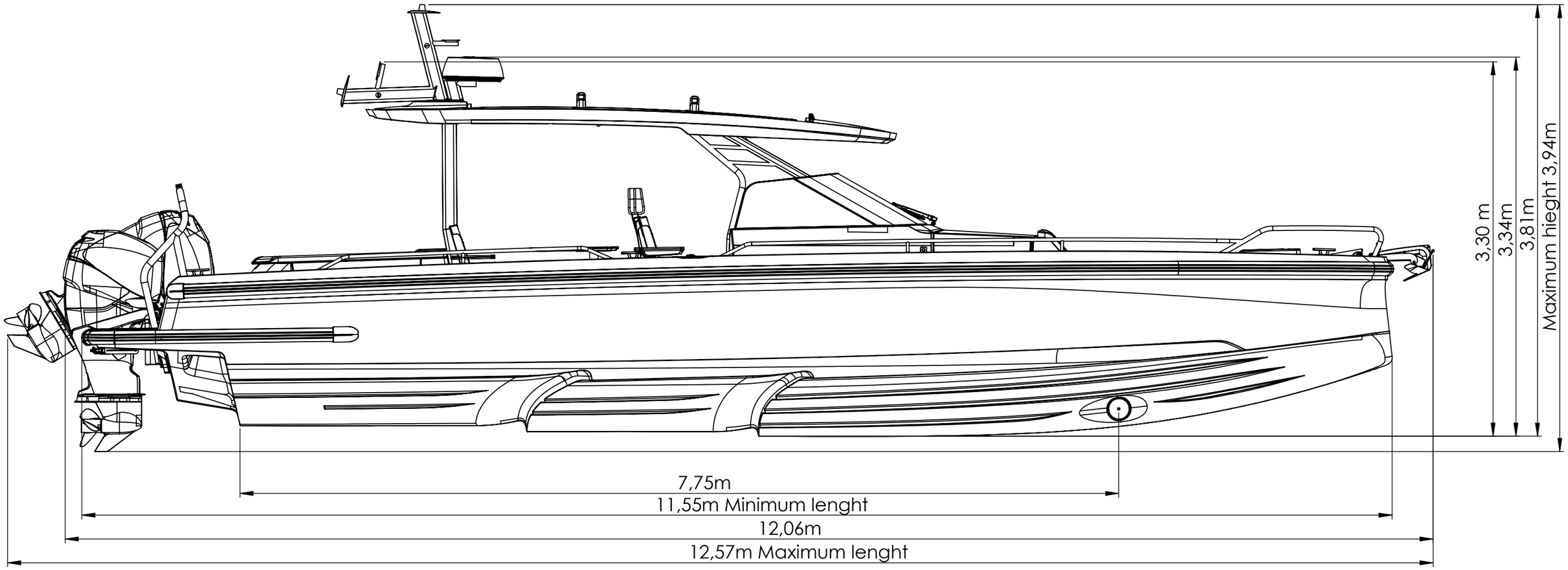

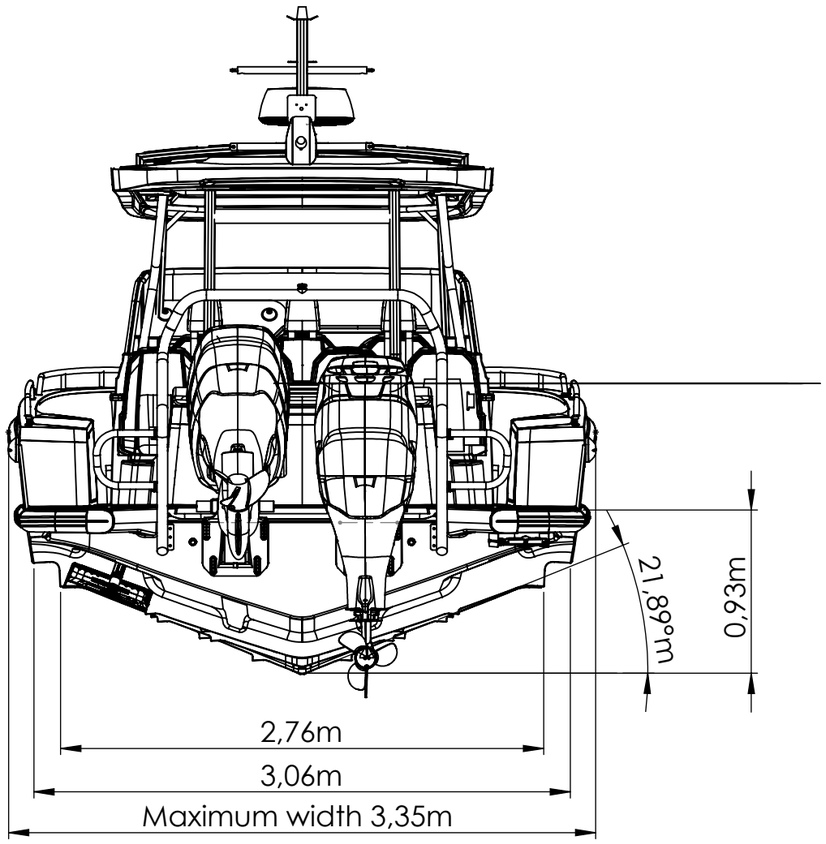

AXOPAR	BOAT MODEL		
DRAWN Tadeusz Klisz	TITLE AX37L ST-Trailer dimention		
MODEL ASSEMBLY Tadeusz Klisz			
APPROVED Petri Ääri	DATE	DWG NO.	Rev. D / SHEET 1 OF 1

14 Appendix V: Warranty terms

14.1 Warranty terms: US

AXOPAR

Limited Warranty for Axopar Boats

US version 1.0

IMPORTANT NOTICE: THIS LIMITED WARRANTY IS SUBJECT TO BINDING ARBITRATION AND A WAIVER OF CLASS ACTIONS, AS DESCRIBED IN SECTION 7. Please also read the limitations and disclaimers in Sections 3(D), 3(E) and 6 regarding Boats.

Limited Warranty

Axopar Boats Ltd ("*Axopar*") warrants to the original retail purchaser ("*Purchaser*") of an Axopar boat manufactured and equipped with a hull identification number by Axopar ("*Boat*") and sold at retail by an authorized dealer ("*Dealer*") that Axopar will repair or replace defective materials and workmanship found during the applicable warranty period, subject to the limitations, exclusions and other conditions provided below. The decision to repair or replace will be made by Axopar in its sole discretion, and all repairs must occur at the location specified by Axopar (the "*Service Location*"). This Limited Warranty gives the Purchaser specific legal rights and Purchaser may have other legal rights, which vary from state to state.

1. Applicability

This Limited Warranty is valid worldwide during the applicable warranty period and applies only to Boats purchased by consumers and operated under normal, non-commercial use in compliance with the relevant owner's manual. Any warranty for Boats intended for commercial use must be separately agreed upon in writing between Axopar and the Purchaser.

The Limited Warranty also covers any equipment installed in the Boat by Axopar as an integral part of the delivery but excludes (i) equipment covered by a separate warranty, as further specified below in Sections 2 (Warranty Provider) and 3 (Warranty Period and Limitations) and (ii) any items installed by the Dealer in the Boat or included by the Dealer with the Boat. Equipment acquired by the Purchaser from third parties and which are not included in the original delivery are not covered under this Limited Warranty.

The hull identification number of the Boat and other particulars relevant to this Limited Warranty are recorded in the applicable sales contract and/or in the Boat's warranty certificate.

2. Warranty Provider

This Limited Warranty is provided solely by Axopar. Contact details are shown in the warranty certificate provided to the Purchaser upon delivery of the Boat. All warranties provided by the manufacturers and distributors of components, equipment and parts of the Boat are hereby assigned to the Purchaser to the extent permitted by the applicable manufacturers and distributors, as Purchaser's sole and exclusive remedy with respect to those items.

3. Warranty Period and Limitations

The Limited Warranty is valid from the delivery date of the Boat to the Purchaser, as reflected in the Boat's warranty certificate (the "*Delivery Date*"), for the time periods identified below.

(A) ***Five-Year Limited Warranty on Structural Hull:***

Axopar will repair or replace any substantial defect in material or workmanship in the Boat's structural hull that is reported within five years from the Delivery Date. The structural hull means the fiberglass molded shell and all its integral structural components. A defect is substantial if it causes the Boat to be unfit or unsafe for general use as a pleasure craft under normal operating conditions.

(B) ***Two-Year Limited Warranty on Components Manufactured or Installed by Axopar:***

Axopar will repair or replace any components manufactured or installed by Axopar that are defective in factory materials or workmanship and are reported within two years from the Delivery Date (and are not already addressed in the specific warranties provided in paragraphs (A) and (C)).

(C) ***One-Year Limited Warranty on Upholstered Items, Canvas, Floor Materials, Other Coating and Painted Parts:***

Axopar will repair or replace any upholstered items, canvas, floor materials, other coating, and painted parts manufactured or installed by Axopar that are defective in factory materials or workmanship and are reported within one year from the Delivery Date.

(D) ***Exclusions***

The Limited Warranty does not apply to or cover the following items: (1) any costs incurred from hauling or transporting the Boat to and from the Service Location; (2) any equipment, parts or accessories not installed by Axopar or that carry their own individual warranties provided by third parties, including but not limited to engines, propellers, pre-rigging equipment, batteries, generators, A/C units, steering mechanisms and other electronic equipment; (3) minor changes to the Boat's external surfaces that have no influence on the strength or serviceability of the Boat, including but not limited to any damage, deterioration, fading or discoloration or mold of cushions, cracking, fading or oxidation of gel coat, stress lines, anti-fouling bottom paint or other slight irregularities in paint work, lacquer work, woodwork or chrome finish or other minor surface blemishes; (4) windshield damage or leakage; (5) any damage resulting from Purchaser's or a third party's negligence, willful misconduct, improper use of the Boat, overloading, powering in excess of the recommended maximum horsepower, improper rigging, misuse or alterations or repairs or attempted repairs on the Boat not authorized by Axopar, including use of an improper trailer, Boat lift or sling; (6) failure of the Purchaser or any third party to use, maintain or store the Boat as specified in the owner's manual, or any other failure to provide reasonable care and maintenance; (7) normal wear and tear items, including but not limited to ropes, filters, bulbs and batteries; (8) any representation or implication of the Boat's properties or characteristics, such as speed, weight, range, performance or fuel consumption; (9) any failure or defect not reported to Axopar or Dealer in accordance with Section 4 (Warranty Procedures) of this Limited Warranty; (10) any failure or defect arising from repairs made by unauthorized service providers; (11) any failure or defect arising from acts of nature; and (12) any Boat that was previously salvaged or declared a total loss or constructive loss for any reason.

(E) ***Voiding the Limited Warranty***

This warranty becomes void if: (1) Purchaser sells or otherwise conveys the Boat to a third party during the warranty period and Axopar is not provided with the bill of sale of the Boat and/or the contact information of the new owner; (2) Purchaser uses the Boat in other than non-commercial activities; (3) the Boat is used in a competitive event; (4) any unauthorized modifications or changes are made to the Boat (e.g. structural modification or modifications to electrical systems on board or the programming of its engine or other systems); or (5) the Boat is salvaged or declared a total loss or constructive loss for any reason.

4. Warranty Procedures

To obtain warranty service, Purchaser must notify the Dealer about the failure or defect within a reasonable time after becoming aware of it or after Purchaser should have become aware of it. Upon detecting a defect, the Purchaser is required to take all reasonable steps necessary to prevent the defect from deteriorating further. When reporting any defect, the Purchaser must provide the Boat's hull identification number, a copy of the warranty certificate, a reasonable number of clear and detailed photos of the defect, and a supported or documented explanation regarding when the Boat was purchased and the Dealer from which it was purchased.

After providing notice of the defect to the Dealer, the Dealer will notify Purchaser of the procedures to follow regarding this Limited Warranty. Dealer will then notify Axopar, and upon being notified of the warranty claim by Dealer, Axopar is solely responsible for determining and authorizing in writing the remedial action to be performed.

5. Axopar's Warranty Responsibilities

Axopar has always the right to repair a defect covered by this Limited Warranty if, in view of the nature and extent of the defect, it can be done within a reasonable time and in such a way that it does not result in repair costs or material detriment to the Purchaser. All repairs shall be carried out in a way and at the Service Location designated by Axopar.

If Axopar determines that repair is not possible, Purchaser has the right to a discount proportionate to the defect. Alternatively, Axopar may, in its sole discretion, offer to Purchaser a replacement Boat with a market value equal to the replaced Boat's market value (considering the Boat's age and condition) if it did not have that specific unrepairable defect.

If Axopar reasonably determines that the Boat defect is not covered by the Limited Warranty, Axopar has the right to charge the Purchaser for any costs that arise from inspecting and determining the defect and its cause. Any repair costs and expenses are subject mutual agreement by Axopar and the Purchaser.

6. Sole Remedy and Other Limitations

The repair, discount and replacement obligations specified in Section 5 (Axopar's Warranty Responsibilities) for parts or materials covered by this Limited Warranty are Purchaser's sole and exclusive remedy, and Axopar's sole obligations, for any claims whatsoever or any losses resulting from product failure.

This Limited Warranty the final, complete and exclusive warranty offered by Axopar regarding the Boat, and no other person or entity (including the Dealer or their respective sales agents or employees) is authorized to make any other warranties or representations on behalf of Axopar. **EXCEPT FOR THE EXPRESS LIMITED WARRANTIES PROVIDED IN THIS LIMITED WARRANTY, AXOPAR DISCLAIMS ALL OTHER EXPRESS AND IMPLIED WARRANTIES AND REPRESENTATIONS OF ANY KIND, INCLUDING ANY IMPLIED WARRANTY OF MERCHANTABILITY, AND FITNESS FOR A PARTICULAR PURPOSE. EXCEPT AS OTHERWISE PROVIDED IN THIS LIMITED WARRANTY, ALL BOATS ARE PROVIDED "AS IS" AND "WITH ALL FAULTS".** If and to the extent that an implied warranty cannot be disclaimed, that warranty is limited to duration of the respective express Limited Warranty provided herein. Some states do not allow the exclusion of implied warranties or do not allow limitations on the amount of time an implied warranty lasts, so the above limitations may not apply to some Purchasers.

To the extent permitted by applicable law, Axopar disclaims all liability to Purchaser and third parties for any economic loss arising from claims of product failure, negligence, defective design, lack of seaworthiness, manufacturing defect and any other liability not expressly covered in this Limited Warranty. **TO THE EXTENT PERMITTED BY APPLICABLE LAW, NEITHER AXOPAR NOR DEALER SHALL UNDER ANY CIRCUMSTANCES BE LIABLE FOR ANY INDIRECT, CONSEQUENTIAL, SPECIAL, ENHANCED, OR PUNITIVE DAMAGES, INCLUDING LOSS OF THE BOAT, PROFIT, PRODUCTIVITY, BUSINESS, CONTRACTS, REVENUES OR ANTICIPATED SAVINGS, OR INCREASED COSTS OR EXPENSES, AND IN NO EVENT SHALL AXOPAR'S LIABILITY EXCEED THE ACTUAL AMOUNT PAID BY PURCHASER FOR THE BOAT.** Some states do not allow the exclusion or limitation of incidental or consequential damages, so the above limitation or exclusion may not apply to every Purchaser.

If, at any time, any provision of this Limited Warranty is or becomes illegal, invalid or unenforceable in any respect under the laws of any jurisdiction, the legality, validity or enforceability of the remaining provisions will remain unaffected.

7. Arbitration and Limitation on Actions

PLEASE READ THIS SECTION CAREFULLY. WE WANT YOU TO KNOW HOW IT AFFECTS YOUR RIGHTS.

(A) *Customer Service and FAQs*

In the unlikely event that an issue, concern or claim (including legal claims) remains unresolved after the procedure specified in Section 4 (Warranty Procedures) and the issue has been escalated to Axopar, Purchaser and Axopar each agree to discuss any issue informally for at least 30 days. Purchaser can do this by sending your full name and contact information, your concern and your requested solution to Axopar at warranty@axopar.fi, Attn: Legal Department. If Axopar would like to discuss an issue with Purchaser, Axopar will contact you at the address provided to the Dealer.

(B) *Agreement to Arbitrate*

If an agreed solution is not reached at the end of the 30-day discussion period, Purchaser and Axopar each agree that any issue, concern or claim (including legal claims) that either may have arising out of or relating to this Limited Warranty must be resolved through final binding arbitration before the American Arbitration Association using its Consumer Arbitration Rules, available at https://www.adr.org/sites/default/files/Consumer%20Rules.pdf (the "*AAA Rules*") or available by calling the American Arbitration

Association at 1-800-778-7879. As an exception to this agreement to arbitrate, Axopar gives you the right to pursue in small claims court any claim that is within that court's jurisdiction, so long as you proceed solely on an individual basis. A party who intends to seek arbitration must first send to the other party, by certified or registered mail, a written notice of dispute. Purchaser may download or copy a form notice of dispute and a form to initiate arbitration from www.adr.org. Unless Purchaser and Axopar agree otherwise, the arbitration hearings will take place in a reasonably convenient location for both parties as determined by the arbitrator in accordance with the AAA Rules, and the hearings may be conducted in-person, by videoconference, phone or by the exchange of documents. The arbitrator's decision will be binding and may be enforced and entered as a judgment in any court of competent jurisdiction. If the arbitrator rules against Axopar, Axopar will reimburse Purchaser for reasonable attorneys' fees and costs, regardless of who initiated the arbitration. However, if the arbitrator rules in Axopar's favor, Axopar will not seek reimbursement of attorneys' fees and costs, regardless of who initiated the arbitration.

(C) *Time Limitation; No Class Actions*

To help resolve any issues between us promptly and directly, Axopar and Purchaser agree to begin any arbitration under this Limited Warranty within one year after the claim first arose; otherwise, the claim is waived. Axopar and Purchaser also agree to arbitrate in each of our individual capacities only – not as a representative or member of a class – and each of us expressly waives any right to file a class action or seek relief on a class action basis. Furthermore, unless Purchaser and Axopar agree in writing, the arbitrator may not consolidate more than one person's claims and may not otherwise preside over any form of a representative of class proceeding.

(D) *Confidentiality*

All arbitration proceedings are confidential, unless both Purchaser and Axopar agree otherwise. Arbitration orders and awards required to be filed with applicable courts of competent jurisdiction are not confidential and may be disclosed by the parties to such courts. A party who improperly discloses confidential information will be subject to sanctions. The arbitrator and forum may disclose case filings, case dispositions, and other case information as required by a court order of proper jurisdiction.

14.2 Warranty terms: non-US

AXOPAR

Limited Warranty for Axopar Boats

Non-US version 1.0

Limited Warranty

Axopar Boats Ltd ("*Axopar*") warrants to the original retail purchaser ("*Purchaser*") of an Axopar boat manufactured and equipped with a hull identification number by Axopar ("*Boat*") and sold at retail by an authorized dealer ("*Dealer*") that Axopar will repair or replace defective materials and workmanship found during the applicable warranty period, subject to the limitations, exclusions and other conditions provided below. The decision to repair or replace will be made by Axopar in its sole discretion, and all repairs must occur at the location specified by Axopar (the "*Service Location*"). This Limited Warranty gives the Purchaser specific legal rights and Purchaser may have other legal rights, which vary from country to country.

1. Applicability

This Limited Warranty is valid worldwide during the applicable warranty period and applies only to Boats purchased by consumers and operated under normal, non-commercial use in compliance with the relevant Axopar owner's manual. Any warranty for Boats intended for commercial use must be separately agreed upon in writing between Axopar and the Purchaser.

The Limited Warranty also covers any equipment installed in the Boat by Axopar as an integral part of the delivery but excludes (i) equipment covered by a separate warranty, as further specified below in Sections 2 (Warranty Provider) and 3 (Warranty Period and Limitations) and (ii) any items installed by the Dealer in the Boat or included by the Dealer with the Boat. Equipment acquired by the Purchaser from third parties and which are not included in the original delivery are not covered under this Limited Warranty.

The hull identification number of the Boat and other particulars relevant to this Limited Warranty are recorded in the applicable sales contract and/or in the Boat's warranty certificate.

2. Warranty Provider

This Limited Warranty is provided solely by Axopar. Contact details are shown in the warranty certificate provided to the Purchaser upon delivery of the Boat. All warranties provided by the manufacturers and distributors of components, equipment and parts of the Boat are hereby assigned to the Purchaser to the extent permitted by the applicable manufacturers and distributors, as Purchaser's sole and exclusive remedy with respect to those items.

3. Warranty Period and Limitations

The Limited Warranty is valid from the delivery date of the Boat to the Purchaser, as reflected in the Boat's warranty certificate (the "*Delivery Date*"), for the time periods identified below.

(A) ***Five-Year Limited Warranty on Structural Hull:***

Axopar will repair or replace any substantial defect in material or workmanship in the Boat's structural hull that is reported within five years from the Delivery Date. The structural hull means the fiberglass molded shell and all its integral structural components. A defect is substantial if it causes the Boat to be unfit or unsafe for general use as a pleasure craft under normal operating conditions.

(B) ***Two-Year Limited Warranty on Components Manufactured or Installed by Axopar:***

Axopar will repair or replace any components manufactured or installed by Axopar that are defective in factory materials or workmanship and are reported within two years from the Delivery Date (and are not already addressed in the specific warranties provided in paragraphs (A) and (C)).

(C) ***One-Year Limited Warranty on Upholstered Items, Canvas, Floor Materials, Other Coating and Painted Parts:***

Axopar will repair or replace any upholstered items, canvas, floor materials, other coating, and painted parts manufactured or installed by Axopar that are defective in factory materials or workmanship and are reported within one year from the Delivery Date.

(D) ***Exclusions***

The Limited Warranty does not apply to or cover the following items: (1) any costs incurred from hauling or transporting the Boat to and from the Service Location; (2) any equipment, parts or accessories not installed by Axopar or that carry their own individual warranties provided by third parties, including but not limited to engines, propellers, pre-rigging equipment, batteries, generators, A/C units, steering mechanisms and other electronic equipment; (3) minor changes to the Boat's external surfaces that have no influence on the strength or serviceability of the Boat, including but not limited to any damage, deterioration, fading or discoloration or mold of cushions, cracking, fading or oxidation of gel coat, stress lines, anti-fouling bottom paint or other slight irregularities in paint work, lacquer work, woodwork or chrome finish or other minor surface blemishes; (4) windshield damage or leakage; (5) any damage resulting from Purchaser's or a third party's negligence, willful misconduct, improper use of the Boat, overloading, powering in excess of the recommended maximum horsepower, improper rigging, misuse or alterations or repairs or attempted repairs on the Boat not authorized by Axopar, including use of an improper trailer, Boat lift or sling; (6) failure of the Purchaser or any third party to use, maintain or store the Boat as specified in the owner's manual, or any other failure to provide reasonable care and maintenance; (7) normal wear and tear items, including but not limited to ropes, filters, bulbs and batteries; (8) any representation or implication of the Boat's properties or characteristics, such as speed, weight, range, performance or fuel consumption; (9) any failure or defect not reported to Axopar or Dealer in accordance with Section 4 (Warranty Procedures) of this Limited Warranty; (10) any failure or defect arising from repairs made by unauthorized service providers; (11) any failure or defect arising from acts of nature; and (12) any Boat that was previously salvaged or declared a total loss or constructive loss for any reason.

(E) ***Voiding the Limited Warranty***

This warranty becomes void if: (1) Purchaser sells or otherwise conveys the Boat to a third party during the warranty period and Axopar is not provided with the bill of sale of the Boat

and/or the contact information of the new owner; (2) Purchaser uses the Boat in other than non-commercial activities; (3) the Boat is used in a competitive event; (4) any unauthorized modifications or changes are made to the Boat (e.g. structural modification or modifications to electrical systems on board or the programming of its engine or other systems); or (5) the Boat is salvaged or declared a total loss or constructive loss for any reason.

4. Warranty Procedures

To obtain warranty service, Purchaser must notify the Dealer about the failure or defect within a reasonable time after becoming aware of it or after Purchaser should have become aware of it. Upon detecting a defect, the Purchaser is required to take all reasonable steps necessary to prevent the defect from deteriorating further. When reporting any defect, the Purchaser must provide the Boat's hull identification number, a copy of the warranty certificate, a reasonable number of clear and detailed photos of the defect, and a supported or documented explanation regarding when the Boat was purchased and the Dealer from which it was purchased.

After providing notice of the defect to the Dealer, the Dealer will notify Purchaser of the procedures to follow regarding this Limited Warranty. Dealer will then notify Axopar, and upon being notified of the warranty claim by Dealer, Axopar is solely responsible for determining and authorizing in writing the remedial action to be performed.

5. Axopar's Warranty Responsibilities

Axopar has always the right to repair a defect covered by this Limited Warranty if, in view of the nature and extent of the defect, it can be done within a reasonable time and in such a way that it does not result in repair costs or material detriment to the Purchaser. All repairs shall be carried out in a way and at the Service Location designated by Axopar.

If Axopar determines that repair is not possible, Purchaser has the right to a discount proportionate to the defect. Alternatively, Axopar may, in its sole discretion, offer to Purchaser a replacement Boat with a market value equal to the replaced Boat's market value (considering the Boat's age and condition) if it did not have that specific unrepairable defect.

If Axopar reasonably determines that the Boat defect is not covered by the Limited Warranty, Axopar has the right to charge the Purchaser for any costs that arise from inspecting and determining the defect and its cause. Any repair costs and expenses are subject mutual agreement by Axopar and the Purchaser.

6. Sole Remedy and Other Limitations

The repair, discount and replacement obligations specified in Section 5 (Axopar's Warranty Responsibilities) for parts or materials covered by this Limited Warranty are Purchaser's sole and exclusive remedy, and Axopar's sole obligations, for any claims whatsoever or any losses resulting from product failure.

This Limited Warranty the final, complete and exclusive warranty offered by Axopar regarding the Boat, and no other person or entity (including the Dealer or its respective sales agents or employees) is authorized to make any other warranties or representations on behalf of Axopar. **EXCEPT FOR THE EXPRESS LIMITED WARRANTIES PROVIDED IN THIS LIMITED WARRANTY, AXOPAR DISCLAIMS ALL OTHER EXPRESS AND IMPLIED WARRANTIES AND REPRESENTATIONS OF ANY KIND, INCLUDING ANY IMPLIED WARRANTY OF MERCHANTABILITY, AND FITNESS FOR A PARTICULAR PURPOSE. EXCEPT AS OTHERWISE PROVIDED IN THIS LIMITED WARRANTY, ALL BOATS ARE PROVIDED "AS IS" AND "WITH ALL FAULTS".** If and to the extent that an implied warranty cannot be disclaimed, that warranty is limited to duration of the respective express Limited Warranty provided herein. Some countries do not allow the exclusion of implied warranties or do not allow limitations on the amount of time an implied warranty lasts, so the above limitations may not apply to some Purchasers.

To the extent permitted by applicable law, Axopar disclaims all liability to Purchaser and third parties for any economic loss arising from claims of product failure, negligence, defective design, lack of seaworthiness, manufacturing defect and any other liability not expressly covered in this Limited Warranty. **TO THE EXTENT PERMITTED BY APPLICABLE LAW, NEITHER AXOPAR NOR DEALER SHALL UNDER ANY CIRCUMSTANCES BE LIABLE FOR ANY INDIRECT, CONSEQUENTIAL, SPECIAL, ENHANCED, OR PUNITIVE DAMAGES, INCLUDING LOSS OF THE BOAT, PROFIT, PRODUCTIVITY, BUSINESS, CONTRACTS, REVENUES OR ANTICIPATED SAVINGS, OR INCREASED COSTS OR EXPENSES, AND IN NO EVENT SHALL AXOPAR'S LIABILITY EXCEED THE ACTUAL AMOUNT PAID BY PURCHASER FOR THE BOAT.** Some countries do not allow the exclusion or limitation of incidental or consequential damages, so the above limitation or exclusion may not apply to every Purchaser.

If, at any time, any provision of this Limited Warranty is or becomes illegal, invalid or unenforceable in any respect under the laws of any jurisdiction, the legality, validity or enforceability of the remaining provisions will remain unaffected.

7. Arbitration and Limitation on Actions

PLEASE READ THIS SECTION CAREFULLY. WE WANT YOU TO KNOW HOW IT AFFECTS YOUR RIGHTS.

(A) *Customer Service and FAQs*

In the unlikely event that an issue, concern or claim (including legal claims) remains unresolved after the procedure specified in Section 4 (Warranty Procedures) and the issue has been escalated to Axopar, Purchaser and Axopar each agree to discuss any issue informally for at least 30 days. Purchaser can do this by sending your full name and contact information, your concern and your requested solution to Axopar at warranty@axopar.fi, Attn: Legal Department. If Axopar would like to discuss an issue with Purchaser, Axopar will contact you at the address provided to the Dealer.

(B) *Agreement to Arbitrate*

If an agreed solution is not reached at the end of the 30-day discussion period, Purchaser and Axopar each agree that any issue, concern or claim (including legal claims) that either may have arising out of or relating to this Limited Warranty must be resolved through final binding arbitration. The arbitrator's decision will be binding and may be enforced and entered as a judgment in any court of competent jurisdiction. If the arbitrator rules against Axopar, Axopar will reimburse Purchaser for reasonable attorneys' fees and costs, regardless of who initiated the arbitration. However, if the arbitrator rules in Axopar's favor, Axopar will not seek reimbursement of attorneys' fees and costs, regardless of who initiated the arbitration.

(C) *Time Limitation; No Class Actions*

To help resolve any issues between us promptly and directly, Axopar and Purchaser agree to begin any arbitration under this Limited Warranty within one year after the claim first arose; otherwise, the claim is waived. Axopar and Purchaser also agree to arbitrate in each of our individual capacities only – not as a representative or member of a class – and each of us expressly waives any right to file a class action or seek relief on a class action basis. Furthermore, unless Purchaser and Axopar agree in writing, the arbitrator may not consolidate more than one person's claims and may not otherwise preside over any form of a representative of class proceeding.

(D) *Confidentiality*

All arbitration proceedings are confidential, unless both Purchaser and Axopar agree otherwise. Arbitration orders and awards required to be filed with applicable courts of competent jurisdiction are not confidential and may be disclosed by the parties to such courts. A party who improperly discloses confidential information will be subject to sanctions. The arbitrator and forum may disclose case filings, case dispositions, and other case information as required by a court order of proper jurisdiction.